VADE MECUM

BY

D. B. DIXON AND THOS. G. GRIER

LIBRARY OF CONGRESS.
T49
Chap. ..... Copyright No. .....
Shelf .D.6.
UNITED STATES OF AMERICA.

VADE MECUM

A WORK OF REFERENCE

FOR THE USE OF

ARCHITECTS, ARCHITECTURAL IRON WORKERS, BUILDERS, BLACKSMITHS, BOOK KEEPERS, BOILER MAKERS, CONTRACTORS, CIVIL, MECHANICAL, HYDRAULIC, MINING, STATIONARY, MARINE AND LOCOMOTIVE ENGINEERS, FOREMEN OF MACHINE SHOPS, FIREMEN, MASTER MECHANICS OF RAILROADS, MASTER CAR BUILDERS, MACHINE SHOP PROPRIETORS, MACHINERY JOBBERS, MACHINERY SALESMEN, MACHINISTS, PATTERN MAKERS, RAILWAY SUPPLY AGENTS, RAILWAY SUPERINTENDENTS, ROADMASTERS, SUPERINTENDENTS OF FACTORIES AND BUSINESS MEN GENERALLY.

40

COMPILED AND ARRANGED BY

D. B. DIXON

WITH A COMPREHENSIVE TREATISE ON

Electricity

BY

THOMAS G. GRIER

CHICAGO

LAIRD & LEE, PUBLISHERS

1893

7928

T49
D6

Entered according to Act of Congress, in the Year Eighteen Hundred and Ninety-three, by Laird & Lee, in the Office of the Librarian of Congress at Washington.

PREFACE.

This book is compiled from the most authentic, scientific and mechanical sources. The matter contained therein has passed the careful scrutiny of well known manufacturers and professional men.

It is not intended to be an educational work, but rather a work of reference for the use of professional and business men, as well as operative mechanics. This work is made to comprehend as far as possible, matter entering into every day practice in the salesroom, office, and workshop, and is the result of many years' actual experience in all lines treated of. The work commends itself particularly to *Architects*, *Architectural Iron Workers*, *Builders*, *Contractors*, *Engineers*, *Railway Supply Agents*, *Superintendents*, *Master Mechanics*, *Machinists and Business men generally*.

D. B. DIXON.

NOVEMBER, 1892.

TABLE OF CONTENTS.

	Page.
Arithmetic.—Common Fractions	17
Decimal Fractions	17
Table of Binary and Decimal Fractions	19
Roman Cardinal Numbers	20
Table of Prime Numbers from 1 to 1000	20
" " United States Money	21
" " English Money	21
" " Avoirdupois Weight	21
" " Troy "	22
" " Apothecaries "	22
" " Linear or Long Measure	23
" " Surveyors' Measure	23
" " Time "	24
" " Square "	25
" " Dry "	25
" " Cubic "	26
" " Liquid "	26
" " Cloth "	27
" " Circular "	27
Miscellaneous Tables	27
What is a Billion?	29
Properties of Numbers	29
Table of Foreign Weights and Measures	29
Duodecimals	31
Percentage	32
Simple Interest	32
Compound Interest	33
Time in which Money doubles at Interest	34
Taxes	35
Square Root	35
Cube "	37
Time Table	38
Value of Articles per Piece, reckoning from Price per Dozen	39
Axles, Weight of Railroad Car, and Common	39
Angles, and Channel Bars, Weight of light Pattern	40
Angle Iron, Weight of Square-Root	40
Alloys	40
Anchors, Weight of	41
Air	42
Air under Pressure, Velocity of	42
Aluminum, Weight of Pure, and Al. Bronze, in Sheets	43

Page.
Acre, Dimensions of Lots containing one 44
Boilers, Specifications of Tubular Stationary 44
" " " Cylinder 44
" " " Two-Flue 45
" " " Tubular, with 4-inch Tubes 45
" " " Six-Inch Flue 45
" " " Scotch Marine 45
" " " Submerged Tubular 46
" " " Plain Vertical Tubular 46
" " " Portable 46
" " " " Locomotive Style 46
" Number of Brick required for Setting 47
Boiler Power 47
Boilers, Horse Power of, Table giving the 48
Boiler Pressures, Table of 49
Boilers, Shells of 50
" Heating Surface of 51
Boiler Heads, Weight of Circular Steel 53
" " " " " Iron 54
Boiler, To find the Strain on the Cylindrical Part of a 54
" Plate, To find the Thickness of, for a given Pressure 54
" To find the Bursting Pressure per Square Inch on a 54
Boilers 55
Boiler, To find the Diameter of Feed Pipe for a 56
Boilers, Feed Water for 56
Boiler Braces 56
Boilers, Porcupine 57
" Table of the strongest Form and Proportion of riveted Joints for 57
Boiler Grate Bars 57
Boilers, To find the Consumption of Coal per Horse Power per Hour for 57
Boiler Incrustation and Scale 58
" Scale Solvent 58
Beams, Weight and Dimensions of I (Eye) 58
Beams, to Find the Safe Load for Cast-Iron 60
Beams, Wooden 61
Brass, Weight of Sheet and Bar 63
Bolts, Weight of 100 64
Bolts and Nuts, a System of 67
Belts, Horse Power of 67
" Driving Power of Oak Tanned Leather 71
Belting, Width and Velocity of 72
Balls, Weight of 72
Bells, Pure Bell Metal 73
Blowers, Sturtevant Pressure 73
Blower and Exhausting Fans 74
Blowers, Monogram 75
" Diameter of Blast Pipes for 76
" Cupola and Forge 78
" Speeds and Capacities of Buffalo 79
Brick Laying 80
Brickwork and Plastering 80
Bible Terms, Definition of 80
Board Measure 82
" " Table of Logs Reduced to 84
Bonds, Table Showing Investment Value of 86
Bodies, Falling 88
Boxes, Capacities of 90

	Page.
Coins, Table of Foreign	90
Cross Ties per Mile of Railroad Track	91
Chains, Weight and Strength of Iron	91
Chain, Short Link	91
" Proofs and Weights of	92
" Cleveland Coil and Cable	92
Chimneys	93
" Proportions for	93
" To Find Horse Power of	94
Cylinders, Table of Areas of	94
" " Contents of	95
Castings, Weight of, by Weight of Patterns	95
Circles, Circumferences and Areas of	96
" Table of Areas of, and of the Sides of Squares of the Same Area	112
" Diam. and Circum. of, and Contents in Gallons—for One Foot in Depth	114
Copper, Weight of Sheet	115
" Braziers' Sheet, Weight of	116
" Gutter	116
" Tinned	116
" Planished	116
" Classification of	117
" Bolt, Weight of per Lineal Foot	117
Cables, Bridge Wire	117
" Galvanized Steel	118
Crucibles, Sizes of	118
Cordage, Weight and Strength of	119
Coals, Table of American	120
Columns, Safe Load in Tons, for Cast Iron	121
" Strength of Cast Iron	122
" Hollow Cylindrical Wrought Iron	124
Chords, Table of Long	125
Curves, Railroad	126
Channel Bars	127
Cement, Hydraulic	128
Cement for Repairing Broken Rocks, Minerals, etc	131
" " Cementing Railing Tops, etc	131
Casing, Wrought Iron Lap Welded	132
" Well	132
Castings, Shrinkage of	133
Combustibles, Table of Composition of	133
Calendar	134
Car Load	135
Decimal Equivalents, Table of	135
Decimal Parts of a Foot, etc	137
Drill Rods, Sizes of Crescent	138
Drills, Twist	139
Drill, to Find the Size of, etc	140
Drills, Taper Shank	140
" Speed of	141
Drill Sockets, Reamer for	141
Discount Tables	142
Dies, Speed of Bolt Cutting	145
" Proportions of Solid	146
Dollar, The Almighty	146
Dollars, Paper and Coin	147
Dollar, to Find the Commercial Value of the Silver	148
Discs, Smooth Iron	148

Page.
Electrical Department ..... 427—480
Alternates 458
Amount of Drop in Wires with a Given Current 448
Ampere Meter 465
Amperes per Lamp, Table of 430
Amperes per Motor 443, 444
Ampere, the 427
Armatures 459
Balancing of Armatures 459
Belt, kind to be used 462
Binding Wires 459
Brushes, ... 460
Candle Power 429
Circular Mill 434
Commutators 460
Comparative Table of Diameter and Weight of Copper Wire 448
Conductors and Insulators, or Non-Conductors 433
Converters 454
Copper Wire, Resistance of 434
Counter Electromotive Force 461
Decimal Equivalents and the Metric System 451
Detail Apparatus and Instruments 464
Determination of Wires 435
Dynamo Electric Machinery 453
Dynamo, The 456
Electric Motors 460
General Remarks on Motors 462
Horse Power 431
Induction 453
Insulation 468
Lightning Arrester 466
Measures of Capacity 452
Measures of Length 452
Measures of Surface 452
Method of Preparing a Wiring Table 435
Methods of Wiring 431, 432, 433
Metric System—Weights 452
Minimum Size Wire for Motor Services, ... 444
Ohm's Law 429
Ohm, the 427
Resistance of Copper Wire, the 434
Rheostats and Resistance Boxes 467
Rules Adopted by the National Electric Light Association, ... 469 to 480
Safety Devices 465
Simplified Copper Wire Equations 447
Size of Belts—Table 463
Starting a Motor 462
Station Switches 467
Stopping a Motor 464
Table of Dimensions and Resistances of Pure Copper Wire 449, 450
Turning a Commutator 464
Units of Measurement 451
Volt Meter 464
Volt, the 427
Watt, the 428
Wiring for Motor Circuits 443
Wiring for Motor Services 445, 446
Wiring Table, Method of Preparing 435
Wiring Tables 437, 438

Page.
Wiring Table for Primary Circuits 439, 440, 441, 442
Engines, Horizontal Stationary Side Valve 149
" Automatic High Speed 150
Engine, The Steam 150
" Cylinder, To find the Area of 150
" A Right Hand 151
" Running "under" and "over" 151
" Horse-Power of an 151
Engines, Locomotive 152
" Horse Power of, for different nations 152
Expansion of Substances by Heat 153
Electricity 153
Etching 154
Fans, Mine Ventilating 154
Flanges, Cast Iron Steam Pipe 155
Fuel 155
" Saving of, by heating Feed Water 157
Flues, Wrought Iron 158
Fish Plates, Weight and Number of, per Mile 158
Fire, Temperature of 159
Freezing Points 159
Friction, Morin's Laws of 159
Force, Centrifugal 159
Freight, Billing railroad 160
Gauges, Numbers and Sizes of Wire 161
" Steel Music Wire 162
" Standard Saw 162
" Jobbers' Drill 162
" Twist Drill and Steel Drill Rod 163
Glass, Window 164
Grindstones 166
Gearing 167
Gear Wheel, To find the Pitch Diameter of a 168
" Blank, To find the Diameter of a 171
Grading 172
Grades, Rise per Mile of various 180
Gas, Illuminating 181
Gravity, Specific 181
" " Problems in 182
" " Table of 183
Hawsers, Steel 187
Heat, Effect of, on various Bodies 187
Hot Water Heating Apparatus 188
Heaters, Money Value of Feed Water 189
Hammer, To find the Force of a Blow of a Steam 189
Height to Weight in man, Table showing the Relation of 189
Heat, Table of Latent 190
Heating by Steam 190
Heater, Buffalo Hot Blast 192
" Sturtevant's Hot Blast 193
Hydraulic Ram 193
Hydraulics 194
Hydrostatics 196
Iron, Weight of Flat Rolled 209
" Area " " " 215
" Weights and Areas of Square and Round Bars of 220
" Angle 227
" Tee 228
" Star 228

Page

Iron, Tire ... 228
" Wagon Box ... 229
" Half Round, Oval and Half Oval ... 229
" Hoop and Scroll ... 229
" Corrugated Sheet ... 230
" Galvanized Sheet ... 230
" Russia " ... 231
" Plate ... 231
" Table of Weight of Cast ... 233
" Value of, per Gross Ton ... 234
" Weight of Steel, Wrought and Cast ... 236
" Breaking and Crushing Strains of Steel and ... 236
" Strength of Charcoal Pig ... 236
" Weight of Sheet ... 238
" Specific Gravity of ... 239
" Circular Heads, Weight of Wrought ... 239
Logarithms, of Numbers ... 240
" Hyperbolic ... 243
Longitude, Lengths of a Degree of ... 243
Lap Joints, Table for Proportioning the Riveting for ... 244
Locomotive, To find the Horse-Power of a ... 244
Locomotives, Hauling, Capacity of ... 244
" Adhesive Power of ... 246
" Distribution of Weight in ... 246
" Tractive Power of ... 246
" To find the Load which a, will take on a given Incline ... 247
Log Line ... 247
Line, A ... 247
Lubricant for Milling Cutters ... 247
Land, Measuring ... 247
Lumber, Average Weight of, per Foot ... 248
" Table of Weight of ... 248
Logs, Weight of ... 248
Mensuration.—To Find the Area of a Parallelogram ... 924
" " " Triangle ... 249
" " " Trapezium ... 249
" " " Trapezoid ... 249
" " " Regular Polygon ... 249
The Diameter of a Circle being Given to Find the Circumference ... 250
The Circumference " " " " Diameter ... 250
To Find the Length of any Arc of a Circle ... 250
" " Area of a Circle ... 250
" " " " Sector ... 250
" " " " Segment of a Circle ... 250
" " " of the Space included between the Circumference of Two Concentric Circles ... 250
" " Circumference of an Ellipse, etc ... 250
" " Area of an Ellipse, etc ... 250
" " " a Parabola, etc ... 251
" " " a Frustum of a Parabola ... 251
" " Solidity of a Cube, etc ... 251
" " " " Prism ... 251
" " Convex Surface of a Cylinder ... 251
" " Solidity of a Cylinder ... 251
" " Convex Surface of a Right Cone ... 251
" " " " of the Frustum of a Right Cone ... 251
" " Solidity of a Cone or Pyramid ... 251
" " " " Frustum of a Cone or Pyramid, etc ... 251
" " " of the " " Pyramid, whose Sides are Regular Polygons ... 251

Page.

To Find the Solidity of the Frustum of a Pyramid when the Ends, etc..... 251
" " " of a Wedge..... 251
" " " of a Prismoid..... 252
" " Convex Surface of a Sphere..... 252
" " Solidity of a Sphere or Globe..... 252
" " " the Segment of a Sphere..... 252
" " " " Frustum " " 252
" " " of a Spheroid..... 252
" " " of the Middle Frustum of a Spheroid, etc..... 252
" " " of a Tetraedron..... 252
" " " of an Octaedron..... 252
" " " of a Dodecaedron..... 252
" " Superfices, etc., of any of the Five Regular Bodies..... 253
" " Convex Superfices of a Cylindric Ring..... 253
" " Solidity of a Cylindric Ring..... 253
Properties of the Circle..... 253
To Find the Size of a Tank to Hold a Certain Number of Gallons..... 254
" " Weight of a Safety Valve Ball, when Scales are not Handy..... 254
" " Largest Square that can be Cut from a Circular Sheet of Given Size..... 255
" " Cubic Contents of a Tapering Vessel..... 255
Metric System, of Lengths..... 255
Measures, Comparative Table of French and United States..... 255
Metals, Malleability of..... 256
" Specific Resistance of..... 256
" Conductivity and Non-Conductivity of..... 257
" Weight of, per Square Foot..... 257
" " " Cubic Inch, and Cubic Foot..... 257
Muntz Metal..... 258
Mills, Flour and Corn..... 258
Miner's Inch..... 260
Mortality, Table of..... 261
Materials, Strength of..... 262
Metals, The Rarer..... 263
" Order of Hardness of, etc..... 264
Metal, Babbit..... 264
" that Expands in Cooling..... 265
Metals, Properties of..... 265
Mile..... 266
Mills, Saw..... 266
Minerals..... 266
Magic Table..... 267
Machinery, Horse Power Required for Driving..... 267
Numbers, Useful, for Rapid Approximation..... 268
" Square Roots and Cube Roots of—from 1 to 20..... 269
" Table of Squares, Cubes, Square Roots and Cube Roots of—from 1 to 1,000..... 270
" First Eight Powers of First Ten..... 277
Nails, Length and Number of Cut, to One Pound..... 277
" " " " " Wire, " " 278
Nuts, Sizes and Weights of Hot Pressed Square..... 279
" " " " " " " Hexagon..... 280
" Average Number of, in a Box or Keg of 200 Pounds..... 281
" Machine Screw..... 281
" Stove Bolt..... 281
Non-Conductors, Relative Value of..... 282
Ores, Earth, etc., Measures of..... 282
" Iron..... 282
Oils, Lubricating..... 283

	Page.
Pipe, Wrought Iron Steam, Gas, and Water	285
" " " " " " " Extra Strong	288
" " " " " " " Double Extra Strong	289
" Tarred or Asphalted Wrought Iron	290
" Lap-Welded Tuyere	290
" For Stay Bolt Tubes	290
" Thickness of Iron Required for Flush Joint	290
" Cast Iron Flanged	291
" Standard Flange	292
" Weights of Cast Iron	293
" Dimensions of Cast Iron	294
" Weight of Cast Iron, including Bells	295
" Thickness of Metal Required for, under Heads of Water	296
" Table of Comparison of Safe Thickness of Cast Iron Water	297
" Capacity of Sewer	298
" Rule for Laying Draining	298
" Weights of Lead	299
" Table of Thickness of Lead	300
" Pure Block Tin	300
" Weight of Riveted Iron and Copper	301
" " Galvanized Iron	301
" Table Showing Square Feet of Surface on	302
" Diameter of Blast	303
" To Find the Weight of, per Running Foot	304
" To Find the Loss of Pressure in Air, by Reason of Friction	304
" Areas and Contents of	305
" Friction-Loss in Pounds Pressure in	306
" Contents of, in Cubic Feet and Gallons	308
" Table of Flow of Steam Through	309
" " for Proportioning the Diameter of Air	310
" Loss of Heat from Steam	311
" To Find the Head due to Friction in a, Running Full	311
" Spiral Riveted Steam	312
" Bursting Pressures of Spiral Riveted Steam	313
" Table of Iron and Rivets Required for Spiral Riveted Steam	314
" Nominal Weight of Spiral Riveted Steam	314
" " " " Fittings for Spiral Riveted Steam	314
Pumps, Boiler Feed	315
" Tank	316
" Duplex Steam	317
" Centrifugal	318
" Steam Jet	318
" Single Acting	319
" Fire Streams	320
" To Find the Horse Power of Boiler Necessary to Run a Steam	320
" Notes	321
Plates, Table of Standard Tin	322
" Weight of Iron, Copper and Brass	323
" Muntz Metal	324
Piston Speeds, Table of	324
Pressure, Safe Working Steam	325
" Mean Effective	326
Planes, Inclined	326
Pulleys, Dimensions for Standard	328
" Speed of	329
" Data for Ordering	329
Presses, Hydrostatic	329
Paints, To Mix Different Colors	329
Papers, Whatman's Drawing	330
Rails Required for One Mile of Single Track, 2,000 lbs. to the ton	331

	Page.
Rails Required for One Mile of Single Track, 2,240 lbs. to the ton	331
Railroads, Logging	331
Rails, Table of Middle Ordinates for Bending	332
Rods, Weight of Round Copper and Brass	332
Roofing, Cost of Tin	333
" Slate	334
Reservoirs, Capacity of, in Gallons	335
Roadways	337
Rope, Manila	337
" Transmission and Standing Wire	338
" Hoisting Wire	339
" Galvanized Iron Wire	340
" " Steel Wire	340
" Transmission of Power by Wire	341
Rivets, Iron	342
" Belt, and Burs	343
" Shearing and Bearing Value of	345
Spikes, Wrought	345
Springs, Weight of Elliptic	346
Shingles	346
Saws, Speed for Circular	347
Shoes, Weights of Horse and Mule	347
Shafting, Transmitting Efficiency of	348
Shaft, To Find the Power of a	349
" " " " Speed of a	349
" " " " Diameter of a	349
Shafting, Horse Power of Line	349
" Speed in Turning	349
Steam, Properties of Saturated	351
" Used Expansively	352
" Velocity of Escaping	352
Sines, Tangents, and Secants, Table of	353
Screw Threads	360
Screws, Wood	361
Screens, Needle Slot Battery	361
Shafting, Patent Cold Rolled	362
Sockets, Artesian Well	363
Screw Ends, Upset	364
Smoke-Stacks, Weight of	366
Steel Plate, Weight of	366
Steel Bar, Weight of	368
Squares, Table Showing Sides of	369
Substances, Ignition Points of Various	369
" Weight of, to Cubic Foot	369
Splice Joints per Mile of Track	372
Steel, Rule for Ascertaining the Weight of	372
" To Find Weight of, by Measurement	372
" Standard File, Sizes	373
" Tempering	374
" Bath for Hardening	374
" Directions for Scaling Sheet	374
" Crucible Cast	374
" Mushet	374
Sound, Distances in Feet which, Travels in Air	375
Screw Cutting	375
Stone, Weight of, per Cubic Foot	375
" Average Crushing Loads on, in Tons	375
Tanks, Gallons Contained in Cisterns and	376
" Size of	377
Tacks	378

	Page.
Type	378
Tubing, Stone Well	378
Timber, To Find Solidity of	378
" To Obtain the Volume of Tapering Stick of	379
" Table Showing Number of Feet in	380
" Board Measure of,	381
Tile, Average Weight of Drain	381
" Carrying Capacity of	382
Tubes, Weight of Brazed Copper	382
" Sizes of Brazed Brass	383
" Weight of Seamless Brass and Copper	383
" Boiler	384
" Lap Welded Charcoal Iron Boiler	386
" " " " Marine Boiler	388
" " " Semi-Steel Locomotive "	389
Tubing, Well	390
Taps, Machine Screw	390
" Speed of	391
Tires, Shrinkage of	391
Thermometric Scales	391
Trains, Speed Table for	392
Time, Table Showing Difference of, etc	392
Unions, Cast Iron Flange	393
Valve, Calculations for the Safety	393
" To Find the Proper Area of a Safety	395
" Safety, Area of, for One Square Foot of Grate	396
" To Find the Area of Opening of a Conical Safety	396
" Lap on a Slide	397
" Amount of Lap Required on the Steam Side of a Slide	397
Wire, Weight of One Foot in Length of Iron, Steel and Copper	398
" " of Brass, B. & S. Gauge	400
" " per Mile of Copper	401
" Hard Copper Telegraph	401
" Iron Telegraph	402
" Galvanized Telegraph	402
" Coiled, for Making Needles	403
" Sizes of American, Expressed in Fractions of an Inch	403
" Yards of, in one Bundle	403
" Tables, Kirkaldy's	404
" Approximate Weight per 1,000 Feet of Copper Braided	405
" Resistance of Pure Copper	406
Washers, Average Number of, in a Box or Keg of 150 lbs	407
" Standard List of Wrought	407
Wind, Velocity and Force of the	408
Water	408
" At Different Temperatures	408
" Boiling Point of	408
" Pressure of	409
" To Find the Horse Power of, Flowing in Streams	410
Walls, Strength of Brick	410
Wood, Relative Hardness of	410
Wheels, Driving	410
" Buffalo Exhaust Disc	411
" Capacities of Large Fan	412
" Sizes and Weights of Cast Iron Tramway	413
Wages, Tables	414
Wheels, Emery	420
Zinc, Approximate Weight of Sheet	422
Zinc Drawn Round Rods, Weight of	423
Zinc Tubing, Weight of Brazed	423

VADE MECUM.

COMMON FRACTIONS.

Rule for Addition.

When necessary, reduce the fractions to their least common denominator, Then:

Add the numerators, and place the sum over the common denominator.

Rule for Subtraction.

When necessary, reduce the fraction to a common denominator. Then:

Subtract the numerator of the subtrahend from the numerator of the minuend, and place the difference over the common denominator.

Rule for Multiplication.

Multiply together the numerators for a new numerator, and the denominators for a new denominator.

Rule for Division.

Invert the divisor, and proceed as in multiplication.

Decimal Fractions.

To reduce a decimal to a common fraction.

RULE: Omit the decimal point, and supply the proper denominator.

Thus. Reduce .125 to a common fraction.

$$125\Big)\frac{125}{1000}\Big(\tfrac{1}{8}\text{ Ans.}$$
$$\underline{1000}$$

To reduce a common fraction to a decimal.

RULE: Annex ciphers to the numerator, and divide by the denominator. Then:

Point off as many decimal places in the result as are equal to the number of ciphers annexed.

Thus: Reduce $\frac{5}{8}$ to a decimal.

$$8\underline{|5000}$$
$$.625\text{ Ans.}$$

Rule for Addition.

Write the numbers so that the decimal points shall stand directly under each other. Add as in whole numbers, and place the decimal point in the result directly under the points in the numbers added.

Rule for Subtraction.

Write the numbers so that the decimal points shall stand directly under each other. Subtract as in whole numbers, and place the decimal point in the result directly under the points in the given numbers.

Rule for Multiplication.

Multiply as in whole numbers, and from the right hand of the product point off as many figures for decimals as there are decimal places in both factors.

Rule for Division.

Divide as in whole numbers, and from the right hand of the quotient point off as many places for decimals as the decimal places in the dividend exceed those in the divisor.

NOTE. The dividend must always contain at least as many decimal places as the divisor, before commencing the division.

If the quotient does not contain a sufficient number of decimal places, prefix ciphers to same.

To reduce a pure circulate to a common fraction.

RULE. Write the repetend for the numerator, omitting the decimal point and the dots, and for the denominator write as many 9s (nines) as there are figures in the repetend, and reduce the fraction to its lowest terms.

NOTE. A pure circulate has no figures but the repetend. As $.\dot{5}$ and $.\dot{1}\dot{2}\dot{4}$.

EXAMPLE.

Change $.\dot{5}\dot{3}$ to a common fraction.

OPERATION.

100 times the repetend $= 53.\dot{5}\dot{3}$
Once " " $= .\dot{5}\dot{3}$
99 " " " $= 53.00$
Once " " $= 53$
$\overline{99}$ Ans.

EXAMPLE.

Change $.\dot{4}\dot{5}\dot{6}$ to a common fraction.

1000 times the repetend $= 456.\dot{4}\dot{5}\dot{6}$
Once " " 456
999 times " " $= 456$
Once " " 456
$\overline{999}$ Ans.

To reduce a mixed circulate to a common fraction.

RULE: First. For the numerator.

Subtract the part which precedes the repetend from the whole expression, both quantities being considered units.

Secondly. For the denominator.

Write as many 9s (nines) as there are figures in the repetend, and annex as many ciphers as there are decimal figures before each repetend.

NOTE. A mixed circulate has other figures before the repetend; as, $.208\dot{3}$ and $.3\dot{1}24\dot{7}$.

EXAMPLE.

Change $821\dot{4}37$ to a common fraction.

$$\frac{821437 - 821}{999000} = \frac{102577}{124875} \text{ Ans.}$$

EXAMPLE.

Change .048 to a common fraction.

$$\frac{48 - 4}{900} = \frac{44}{900} = \frac{11}{225} \text{ Ans.}$$

TABLE OF BINARY AND DECIMAL FRACTIONS.

$\frac{1}{64} = .015625$	$\frac{17}{64} = .265625$	$\frac{33}{64} = .515625$	$\frac{49}{64} = .765625$
$\frac{1}{32} = .03125$	$\frac{9}{32} = .28125$	$\frac{17}{32} = .53125$	$\frac{25}{32} = .78125$
$\frac{3}{64} = .046875$	$\frac{19}{64} = .296875$	$\frac{35}{64} = .546875$	$\frac{51}{64} = .796875$
$\frac{1}{16} = .0625$	$\frac{5}{16} = .3125$	$\frac{9}{16} = .5625$	$\frac{13}{16} = .8125$
$\frac{5}{64} = .078125$	$\frac{21}{64} = .328125$	$\frac{37}{64} = .578125$	$\frac{53}{64} = .828125$
$\frac{3}{32} = .09375$	$\frac{11}{32} = .34375$	$\frac{19}{32} = .59375$	$\frac{27}{32} = .84375$
$\frac{7}{64} = .109375$	$\frac{23}{64} = .359375$	$\frac{39}{64} = .609375$	$\frac{55}{64} = .859375$
$\frac{1}{8} = .125$	$\frac{3}{8} = .375$	$\frac{5}{8} = .625$	$\frac{7}{8} = .875$
$\frac{9}{64} = .140625$	$\frac{25}{64} = .390625$	$\frac{41}{64} = .640625$	$\frac{57}{64} = .890625$
$\frac{5}{32} = .15625$	$\frac{13}{32} = .40625$	$\frac{21}{32} = .65625$	$\frac{29}{32} = .90625$
$\frac{11}{64} = .171875$	$\frac{27}{64} = .421875$	$\frac{43}{64} = .671875$	$\frac{59}{64} = .921875$
$\frac{3}{16} = .1875$	$\frac{7}{16} = .4375$	$\frac{11}{16} = .6875$	$\frac{15}{16} = .9375$
$\frac{13}{64} = .203125$	$\frac{29}{64} = .453125$	$\frac{45}{64} = .703125$	$\frac{61}{64} = .953125$
$\frac{7}{32} = .21875$	$\frac{15}{32} = .46875$	$\frac{23}{32} = .71875$	$\frac{31}{32} = .96875$
$\frac{15}{64} = .234375$	$\frac{31}{64} = .484375$	$\frac{47}{64} = .743375$	$\frac{63}{64} = .984375$
$\frac{1}{4} = .25$	$\frac{1}{2} = .5$	$\frac{3}{4} = .75$	$1 = 1.000000$

ROMAN CARDINAL NUMBERS.

I	1	XXII	22
II	2	XXX	30
III	3	XL	40
IV	4	L	50
V	5	LX	60
VI	6	LXX	70
VII	7	LXXX	80
VIII	8	XC	90
IX	9	C	100
X	10	CC	200
XI	11	CCC	300
XII	12	CCCC	400
XIII	13	D	500
XIV	14	DC	600
XV	15	M	1,000
XVI	16	MM	2,000
XVII	17	$\overline{V}$	5,000
XVIII	18	$\overline{X}$	10,000
XIX	19	$\overline{L}$	50,000
XX	20	$\overline{C}$	100,000
XXI	21		

The Romans contrived to express all numbers by these seven letters—I, one; V, 5; X, 10; L, 50; C 100· D 500; M 1,000.

The repetition of a letter repeats its value; thus II signifies 2; XXX 30 etc.; V and L are never repeated.

When a letter of less value is placed before another of greater value, the value of the less is taken from the greater. When placed after it, the value of the less is added to the greater.

TABLE OF PRIME NUMBERS FROM 1 TO 1,000.

1	59	139	233	337	439	557	653	769	883
2	61	149	239	347	443	563	659	773	887
3	67	151	241	349	449	569	661	787	907
5	71	157	251	353	457	571	673	797	911
7	73	163	257	359	461	577	677	809	919
11	79	167	263	367	463	587	683	811	929
13	83	173	269	373	467	593	691	821	937
17	89	179	271	379	479	599	701	823	941
19	97	181	277	383	487	601	709	827	947
23	101	191	281	389	491	607	719	829	953
29	103	193	283	397	499	613	727	839	967
31	107	197	293	401	503	617	733	853	971
37	109	199	307	409	509	619	739	857	977
41	113	211	311	419	521	631	743	859	983
43	127	223	313	421	523	641	751	863	991
47	131	227	317	431	541	643	757	877	997
53	137	229	331	433	547	647	761	881	

A Prime Number is one that can not be resolved or separated into two or more integral factors.

A Prime Number can be divided only by itself and unity.

UNITED STATES MONEY.

Table.

10 mills (m.)	make	1 cent.....ct.	1 E	10000 m.
10 cents	"	1 dime.....d.		1000 ct.
10 dimes	"	1 dollar.....$		100 d.
10 dollars	"	1 eagle.....E		10 $

Equivalents.

E.	$	D.	CT.	M.
1 =	10 =	100 =	1000 =	10000
	1 =	10 =	100 =	1000
		1 =	10 =	100
			1 =	10

ENGLISH MONEY.

Table.

			U. S. VALUE.
4 farthings (far.)	make	1 penny.....d.....	$0.0202 +
12 pence	"	1 shilling.....s.....	.2433 +
20 shillings	"	1 pound, or sov...£.....	$4.8665

Equivalents.

£	S.	D.	FAR.
1 =	20 =	240 =	660
	1 =	12 =	48
		1 =	4

Also.

1 crown = 5 shillings.

1 half crown = 2 shillings and 6 pence.

1 guinea = 21 shillings.

1 Canadian sovereign = $4.86⅔.

NOTE. A French franc is equal to $.193 U. S. money.

AVOIRDUPOIS WEIGHT.

Table.

16 drams (dr.)	make	1 ounce.....	oz.
16 ounces	"	1 pound.....	lb.
25 pounds	"	1 quarter.....	qr.
4 quarters	"	1 hundred weight.....	cwt.
20 hundred weight, or 2,000 lbs.		1 ton.....	T.

Equivalent.

T.	CWT.	QR.	LB.	OZ.	DR.
1 =	20 =	80 =	2000 =	32000 =	512000
	1 =	4 =	100 =	1600 =	25600
		1 =	25 =	400 =	6400
			1 =	16 =	256
				1 =	16

Long Ton Table.

16 ounces	make 1 pound	lb.
28 pounds	" 1 quarter	qr.
4 quarters	" 1 hundred weight	cwt.
20 cwt. = 2240 lb.	" 1 ton	T.

TROY WEIGHT.

Table.

24 grains (gr.)	make 1 pennyweight	pwt.
20 pennyweights	" 1 ounce	oz.
12 ounces	" 1 pound	lb.
$3\frac{1}{5}$ grains	" 1 carat	K.

Equivalents.

LB.	OZ.	PWT.	GR.
1 =	12 =	240 =	5760
	1 =	20 =	480
		1 =	24

NOTE. A jeweler's carat is equal, in the U. S., to 3.2 grains; in London, to 3.17 grains; in Paris, to 3.18 grains.

APOTHECARIES' WEIGHT.

Table.

20 grains (gr.)	make 1 sruple	℈
3 sruples	" 1 dram	ʒ
8 drams	" 1 ounce	℥
12 ounces	" 1 pound	lb.

Equivalents.

LB.	℥	ʒ	℈	GR.
1 =	12 =	96 =	288 =	5760
	1 =	8 =	24 =	480
		1 =	3 =	60
			1 =	20

NOTE: In Troy and Apothecaries' weights, the grain, ounce and pound are the same.

LINEAR, OR LONG MEASURE.

Table.

12 inches (in.) make 1 foot.....ft.
3 feet " 1 yard.....yd.
5½ yards " 1 rod.....rd.
40 rods " 1 furlong.....fur.
8 furlongs " 1 statute mile.....mi.

Equivalents.

MI.	FUR.	RODS.	YDS.	FT.	IN.
1 =	8 =	320 =	1760 =	5280 =	63360
	1 =	40 =	220 =	660 =	7920
		1 =	5½ =	16½ =	198
			1 =	3 =	36
				1 =	12

Also.

9 inches make 1 span.
4 " " 1 hand.
6 feet " 1 fathom.
120 fathoms " 1 cable length.
7½ cable lengths " 1 mile.
1.15 statute miles " 1 geographic mile.
3 geographic miles " 1 league.
60 " " " } 1 degree.
69⅕ statute " " "
360 degrees..... " the circumference of the earth.
5280 feet..... " 1 statute mile.
6072 " ..... " 1 geographic mile.
6082.66 feet..... " 1 nautical knot.

The length of a degree of latitude varies, being 68.72 miles at the equator, 68.9 to 69.05 miles in middle latitudes, and 69.30 to 69.34 miles in the polar regions. A degree of longitude is greatest at the equator, where it is 69.16 miles, and it gradually decreases toward the poles, where it is 0.

SURVEYORS' MEASURE.

Table of Linear Distances.

7.92 inches (in.) make 1 link.....l.
25 links " 1 rod.....rd.
4 rods, or 66 feet " 1 chain.....ch.
80 chains " 1 mile.....mi.

Equivalents.

MI.	CH.	RD.	L.	IN.
1 =	80 =	320 =	8000 =	63360
	1 =	4 =	100 =	792
		1 =	25 =	198
			1 =	7.92

Gunter's chain is 4 rods in length, and consists of 100 links.

Table of Areas.

625 square links (sq. l) make 1 pole.....p.
16 poles " 1 square chain.....sq. ch.
100 square feet = 1 square.
1 chain wide = 8 acres per mile.
1 square acre = 208.71 feet at each side.
A square ½ " = 147.58 " " "
A " ¼ " = 104.355 " " "
A circular " = 235.504 feet in diameter.
A " ½ " = 166.527 " "
A " ¼ " = 117.752 " "
10 square chains make 1 acre.....A.
640 acres " 1 square mile.....sq. mi.
36 square miles " 1 township.....Tp.

Equivalents.

TP.	SQ. MI.	A.	SQ. CH.	P.	SQ. L.
1 =	36 =	23040 =	230400 =	3686400 =	2304000000
	1 =	640 =	6400 =	102400 =	64000000
		1 =	10 =	160 =	10000
			1 =	16 =	1000
				1 =	625

A section equals 1 square mile, or 640 acres.
A township is 6 miles square, and contains 36 sections.
A vara is equal to 2.75 lineal feet.
"50 vara lot" equals 50 varas square, or 18,906.25 sqr. ft., or 434 acres.
"100 vara lot" equals 100 varas square, or 5,625 sqr. ft., or 1,736 acres.
1 Legua land (Mexican) equals 678.17 square miles, or $4{,}340\frac{5}{18}$ acres.
The French Foot equals 12.8 inches, nearly.
The French Arpent contains nearly $\frac{5}{6}$ of an acre.

TIME MEASURE.

Table.

60 seconds (sec.) make 1 minute.....m.
60 minutes " 1 hour.....hr.
24 hours " 1 day.....da.
7 days " 1 week.....wk.
365¼ days " 1 year.....yr.
100 years " 1 century.....C.

Equivalents.

YR.	WK.	DA.	HR.	MIN.	SEC.
1 =	52 =	365¼ =	8766 =	525960 =	31557600
	1 =	7 =	168 =	10080 =	604800
		1 =	24 =	1440 =	86400
			1 =	60 =	3600
				1 =	60

A Sidereal Day equals 23 hours, 56 minutes, 4.092 seconds, in solar or mean time.

A Solar Day (mean) equals 24 hours, 3 minutes, 56.555 seconds, in sidereal time.

A sidereal year, or revolution of the earth, equals 365.25635 solar days.

A Solar, or Calendar Year, equals 365.24224 solar days.

SQUARE MEASURE.

Table.

144	square inches (sq. in.)	make 1 square foot	.....sq. ft.
9	square feet	" 1 square yard	.....sq. yd.
30¼	square yards	" 1 square rod	.....sq. rd.
40	square rods	" 1 rood	.....R.
4	roods	" 1 acre	.....A.
640	acres	" 1 square mile	.....sq. mi.

Equivalents.

SQ. MI. A.	R.	SQ. RD.	SQ. YDS.	SQ. FT.	SQ. IN.
1 = 640 =	2560 =	102400 =	3097600 =	27878400 =	4014489600
1 =	4 =	160 =	4840 =	43560 =	6272640
	1 =	40 =	1210 =	10890 =	1568160
		1 =	30¼ =	272¼ =	39204
			1 =	9 =	1296
				1 =	144

Joiners, bricklayers and masons make no allowance for windows, doors, or other openings.

Bricklayers and masons, in estimating their work by cubic measure, make no allowance for the corners of the walls of houses, cellars, etc., but estimate their work by the girt, that is, the entire length of the wall on the outside.

Plasterers estimate their work by the square yard, and make no allowance for doors and windows; charging double for plastering around gothic, circular and irregular shaped openings.

In some localities, but one-half is charged for plastering around doors and rectangular shaped windows.

DRY MEASURE.

Table.

2 pints (pt.)	make	1 quart	.....qt.
8 quarts	"	1 peck	.....pk.
4 pecks	"	1 bushel	.....bu.
36 bushels	"	1 chaldron	.....ch.

Equivalents.

CH.	BU.	PK.	QT.	PT.
1 =	36 =	144 =	1152 =	2304
	1 =	4 =	32 =	64
		1 =	8 =	16
			1 =	2

The U. S. standard unit of dry measure is the British Winchester bushel, which is 18½ inches in diameter and 8 inches deep, and contains 2150.42 cubic inches, equal to 77.6274 pounds avoirdupois of distilled water, at its maximum density.

A gallon, dry measure, contains 268.8 cubic inches.

	CUBIC INCHES. IN ONE GALLON.	CUBIC INCHES. IN ONE QUART.	CUBIC INCHES. IN ONE PINT.	CUBIC INCHES. IN ONE GILL.
Wine measure	231	$57\frac{3}{4}$	$28\frac{7}{8}$	$7\frac{7}{32}$
Dry measure	$268\frac{4}{5}$	$67\frac{1}{5}$	$33\frac{3}{5}$	$8\frac{2}{5}$
Beer, gallon	282			

A bushel is commonly estimated at 2150.4 cubic inches, and when heaped the cone must be 6 inches high, making a heaped bushel equal to 1¼ struck ones.

CUBIC MEASURE.

Table.

1728 cubic inches (cu. in.)	make 1 cubic foot	cu. ft.
27 cubic feet	" 1 cubic yard	cu. yd.
16 cubic feet	" 1 cord foot	cd. ft.
8 cord feet, or 128 cubic feet	" 1 cord of wood	cd.
$24\frac{3}{4}$ cubic feet	" 1 perch	Pch.

A pile of wood 8 feet long, 4 feet wide, and 4 feet high, contains 1 cord; and a cord foot is 1 foot in length of such a pile.

A perch of stone, or of masonry, is 16½ feet long, 1½ feet wide, and 1 foot high.

In some localities a perch of stone equals 22 cubic feet. In others 18 cubic feet.

LIQUID MEASURE.

Table.

4 gills (gi.)	make 1 pint	pt.
2 pints	" 1 quart	qt.
4 quarts	" 1 gallon	gal.
31½ gallons	" 1 barrel	bbl.
2 barrels	" 1 hogshead	hhd.

Equivalents.

HHD.	BBL.	GAL.	QTS.	PTS.	GI.
1 =	2 =	63 =	252 =	504 =	2016
	1 =	31½ =	126 =	252 =	1008
		1 =	4 =	8 =	32
			1 =	2 =	8
				1 =	4

Also.

36 gallons make 1 barrel of ale, beer, or milk.
54 " " 1 hogshead " " "
42 " " 1 tierce.
2 hogsheads " 1 pipe, or butt.
2 pipes " 1 tun.

CLOTH MEASURE.

2¼ inches make 1 nail.....na.
4 nails " 1 quarter.....qr.
4 quarters " 1 yard.....yd.

CIRCULAR MEASURE.

Table.

60 seconds (″) make 1 minute.....′
60 minutes " 1 degree.....°
30 degrees " 1 sign.....S.
12 signs, or 360 degrees " 1 circle.....C.

Equivalents.

C.	S.	°	′	″
1 =	12 =	360 =	21600 =	1296000
	1 =	30 =	1800 =	108000
		1 =	60 =	3600
			1 =	60

Also.

90 degrees make 1 quadrant.
4 quadrants, or 360 degrees, make 1 circle.

MISCELLANEOUS TABLES.

12 units.....make 1 dozen.
12 dozen..... " 1 gross.
12 gross..... " 1 great gross.
20 things..... " 1 score.
100 pounds..... " 1 quintal of fish.

196	pounds	"	1 barrel of flour.
200	pounds	"	1 barrel of pork.
18	inches	"	1 cubit.
22	inches (nearly)	"	1 sacred cubit.
14	pounds	"	1 stone.
21½	stones	"	1 pig.
8	pigs	"	1 fother.
100	pounds of grain or flour	"	1 cental.
100	" dry fish	"	1 quintal.
100	" nails	"	1 keg.
280	" salt at N. Y. S. works	"	1 barrel.
56	" " " "	"	1 bushel.
240	" lime	"	1 cask.
32	" oats	"	1 bushel.
56	" corn, shelled	"	1 bushel.
60	" wheat	"	1 bushel.

A cubic inch of distilled water in a vacuum, weighed by brass weights, also in a vacuum, at a temperature of 62 degrees Fah., is equal to 252.458 grains, of which the standard Troy pound contains 5760. A pound avoirdupois contains 7000 Troy grains. An ounce Troy is 42.5 grains greater than an ounce avoirdupois.

Sizes of Flat Paper.

Flat Letter	10 x 16
Flat Foolscap	13 x 16
Packet Post	12 x 19
Cap	14 x 17
Crown	15 x 19
Double Flat Letter	16 x 20
Demy	16 x 21
Folio Post	17 x 22
Check Folio	17 x 24
Medium	18 x 23
Double Flat Foolscap	16 x 26
Bank Folio	19 x 24
Royal	19 x 24
Double Cap	17 x 28
Super Royal	20 x 28
Double Demy	21 x 32
Double Demy	16 x 42
Imperial	23 x 31
Double Medium	23 x 36
Double Medium	18 x 46
Elephant	23 x 28
Colombier	23 x 34
Atlas	26 x 33
Double Royal	24 x 38
Double Elephant	27 x 40
Antiquarian	31 x 53

A sheet folded in 2 leaves is called a folio.
" " 4 " " a quarto, or 4to.
" " 8 " " an octavo, or 8vo.
" " 12 " " a 12mo.
" " 18 " " an 18mo.
" " 24 " " a 24mo.
" " 32 " " a 32mo.

24 sheets make 1 quire.
20 quires " 1 ream.
2 reams " 1 bundle.
5 bundles " 1 bale.

Billion.

A billion, according to the French and American system of notation, is one thousand millions.

Thus, 1,000,000,000.

According to the English system, a billion is one million millions.

Thus, 1,000,000,000,000.

In the English method the period contains six orders, the name of the first period being Units, the second Millions, and the third Billions.

Properties of Numbers.

The number 142,857 multiplied by 1, 2, 3, 4, 5 or 6 gives the same figures in the same order, beginning at a different point, and if multiplied by 7 gives all nines.

142,857 × 1 = 142,857
142,857 × 2 = 285,714
142,857 × 3 = 428,571
142,857 × 4 = 571,428
142,857 × 5 = 714,285
142,857 × 6 = 857,142
142,857 × 7 = 999,999
142,857 × 8 = 1,142,856
1
142,857

FOREIGN WEIGHTS AND MEASURES.

DENOMINATION.	WHERE USED.	U. S. EQUIVALENT.
Almude	Portugal	4.442 gals.
Ardeb	Alexandria	7.5907 bus.
Aratel or libra	Portugal	1.011 lbs. av.
Aroba	Portugal	32.38 lbs.
"	Brazil	"
"	Spain	25.36 lbs.
"	Buenos Ayres	"
"	Spain (wine)	4.26 gals.
Artal	Morocco	1.12 lbs. av.

Baril	Argentine Rep.	20.0787 gals.
"	Mexico	"
Candy	Bombay	560 lbs. av.
"	Madras	500 lbs. av.
Cantar	Turkey	124.7036 lbs. av.
Catty	China	1.333 lbs. av.
"	Japan	1.31 lbs.
"	Java & Siam	1.35 lbs.
"	Malacca	"
"	Sumatra	2.12 lbs.
Centner	Bremen	127.5 lbs.
"	Brunswick	117.5 lbs.
"	Darmstadt	110.24 lbs.
"	Zollverein	"
"	Denmark	110.11 lbs
"	Norway	"
"	Nuremberg	112.43 lbs.
"	Prussia	113.44 lbs.
"	Vienna	123.5 lbs.
Fanega	Mexico	1.54728 bus.
"	Peru	140 Castilian lbs.
Gramme	Metric	15.432 grs. av.
Hectoliter	"	26.417 quarts.
Kilogram or kilo	"	2.2046 lbs. av.
Kilometer	"	0.621376 miles.
Last	Belgium (dry)	85.134 bus.
"	Holland (dry)	"
"	Eng. (dry malt)	82.52 bus.
"	Prussia	112.29 bus.
Libra	Castilian	7100 grains troy.
"	Chili	1.014 lbs. av.
Liter	Metric	1.026 quarts.
Livre	Guiana	1.0791 lbs. av.
Maund	Bengal	82.285 lbs. av.
"	Bombay	28 lbs. av.
"	Madras	25 lbs. av.
Meter	Metric	39.37 inches.
"	Metric (cubic)	1.308 cubic yds.
"	Metric (sq.)	1550.0 sq. inches.
Oka	Egypt	2.7235 lbs. av.
"	Hungary	3.0817 lbs. av.
"	Turkey	2.83418 lbs. av.
Picul	Borneo	135.64 lbs.
"	Celebes	"
"	China	133⅓ lbs.
"	Sumatra	"
"	Japan	130 lbs.
"	Java (Batavia)	135.10 lbs.
"	Hemp of Manila Philip. Isl.	139.45 lbs.

"	Sugar of Manila, Phil. Isl.	140 lbs.
Pie	Argentine Republic	0.9478 feet.
"	Castilian	0.91407 feet.
Pik	Turkey	27.9 inches.
Quarter	England	8.252 bus.
Quintal	Brazil	130.06 lbs. av.
"	Buenos Ayres	101.42 lbs. av.
"	Castile, Chili	101.61 lbs. av.
"	Mexico, Peru	"
"	Metric	220.47 lbs.
Tael	Cochin-China	590.75 grainstroy.
Tonde (ton)	Denmark	3.94783 bus.
Vara	Castilian	0.914117 yard.
"	Curacoa	33.375 inches.
"	Peru and Cuba	"

DUODECIMALS.

Table.

12 fourths, marked (′′′′)	make 1 third	marked	1′′′
12 thirds	" 1 second	"	1′′
12 seconds	" 1 prime, or inch	"	1′
12 primes, or inches	" 1 foot	"	ft.

Rule for Multiplication.

Write the several terms of the multiplier under the corresponding terms of the multiplicand.

Multiply each term of the multiplicand by each term of the multiplier, beginning with the lowest term in each, and call the product of any two denominations the denomination denoted by the sum of their indices, carrying 1 for every 12.

Add the partial products, carrying 1 for every 12; their sum will be the required answer.

EXAMPLE. How many square feet in a board 11 feet 8 inches long, and 2 feet 7 inches wide?

11 ft. 8′
2 7′
6 ft. 9′ 8′′
23 4′
30 ft. 1′ 8′′ Ans.
Or, 30 ft. $1\frac{8}{12}$ inches.

8′ × 7′ = 56′′
$\frac{56''}{12}$ = 4′ and
8′′ remainder.
11 ft. × 7′ = 77′
77′ + 4′ = 81′
$\frac{81'}{12}$ = 6 ft. and
9′ remainder.
8′ × 2 ft. = 16′
$\frac{16'}{12}$ = 1 ft and
4′ remainder.
11 ft. × 2 ft. = 22 ft.
22 ft. + 1 ft. = 23 ft.

PERCENTAGE.

Table.

1	per cent	=	.01	=	$\frac{1}{100}$	= $\frac{1}{100}$
2	"	=	.02	=	$\frac{2}{100}$	= $\frac{1}{50}$
4	"	=	.04	=	$\frac{4}{100}$	= $\frac{1}{25}$
5	"	=	.05	=	$\frac{5}{100}$	= $\frac{1}{20}$
6	"	=	.06	=	$\frac{6}{100}$	= $\frac{3}{50}$
7	"	=	.07	=	$\frac{7}{100}$	= $\frac{7}{100}$
8	"	=	.08	=	$\frac{8}{100}$	= $\frac{2}{25}$
10	"	=	.10	=	$\frac{10}{100}$	= $\frac{1}{10}$
16	"	=	.16	=	$\frac{16}{100}$	= $\frac{4}{25}$
20	"	=	.20	=	$\frac{20}{100}$	= $\frac{1}{5}$
25	"	=	.25	=	$\frac{25}{100}$	= $\frac{1}{4}$
50	"	=	.50	=	$\frac{50}{100}$	= $\frac{1}{2}$
100	"	=	1.00	=	$\frac{100}{100}$	= 1
125	"	=	1.25	=	$\frac{125}{100}$	= $\frac{5}{4}$
½	"	=	.005	=	$\frac{5}{1000}$	= $\frac{1}{200}$
¾	"	=	.0075	=	$\frac{75}{10000}$	= $\frac{3}{400}$
12½	"	=	.125	=	$\frac{125}{1000}$	= $\frac{1}{8}$
16¼	"	=	.1625	=	$\frac{1625}{10000}$	= $\frac{13}{80}$

To Find the Percentage of Any Number.

RULE. Multiply the given number or quantity by the rate per cent. expressed decimally, and point off as in decimals.

To Find What Per Cent. One Number is of Another.

RULE. Divide the percentage by the base, and the quotient will be the rate per cent. expressed decimally.

To Find a Number When a Certain Per Cent. of It Is Given.

RULE. Divide the percentage by the rate per cent. expressed decimally, and the quotient will be the base, or number required.

To Find a Number When the Number, Increased by a Certain Per Cent. of Itself, Is Given.

RULE. Divide the amount by 1 plus the rate expressed decimally, and the quotient will be the base, or number required.

To Find a Number When the Number, Diminished by a Certain Per Cent. of Itself, Is Given.

RULE. Divide the given number by 1 minus the rate expressed decimally, and the quotient will be the base, or number required.

Simple Interest.

GENERAL RULE. Find the interest for one year by multiplying the principal by as many hundredths as are expressed in the rate per cent., then multiply by the number of years and fractional parts of years expressed in the given time.

NOTE. When the time is expressed in months and days, it is usual for convenience to regard each month as $\frac{1}{12}$, and each day as $\frac{1}{360}$ of the year.

EXAMPLE. What is the simple interest of $844.50 for 2 years, 3 months, 6 days, at 7 per cent?

$844.50
.07
1 year = 59.1150
2 " = 118.230
3 mos. = ¼ 14.778
6 da. = $\frac{1}{60}$ .985
$133.99 Answer.

Or, 844.50
.07
59.1150 = interest for 1 year.
2
118.2300 = " " 2 "

3 months = ¼ of 1 year.

$$\frac{59.1150}{4} = 14.77875$$

6 days = $\frac{1}{60}$ of 1 year.

$$\frac{59.1150}{60} = .98525$$

Then $118.2300
14.77875
.98525
$133.99400 Answer.

To Find the Interest on Any Sum of Money at a Given Rate for One Year.

RULE. Multiply the sum by the rate and divide by 100.

To Find the Interest on Any Sum of Money at a Given Rate for Any Given Number of Days.

RULE. Multiply the interest for one year by the number of days and divide the product by 365.

Compound Interest.

One dollar loaned one hundred years, with interest compounded each year would produce the following results:

1	per cent	would	amount	to..... 2.75
3	"	"	"	..... 19.25
6	"	"	"	..... 340.00
10	"	"	"	..... 13,809.00
12	"	"	"	..... 84,675.00
15	"	"	"	..... 1,174,405.00
18	"	"	"	..... 15,145,207.00
24	"	"	"	..... 2,551,799,404.00

Compound Interest Table.

Showing the amount of $1, at 3, 4, 5, 6, and 7 per cent. compound interest, for any number of years, from 1 to 20:

YRS.	3 PER CENT.	4 PER CENT.	5 PER CENT.	6 PER CENT.	7 PER CENT.
1	1.030000	1.040000	1.050000	1.060000	1.07000
2	1.060900	1.081600	1.102500	1.123600	1.14490
3	1.092727	1.124864	1.157625	1.191016	1.22504
4	1.125509	1.169859	1.215506	1.262477	1.31079
5	1.159274	1.216653	1.276282	1.338226	1.40255
6	1.194052	1.265319	1.340096	1.418519	1.50073
7	1.229874	1.315932	1.407100	1.503630	1.60578
8	1.266770	1.368569	1.477455	1.593848	1.71818
9	1.304773	1.423312	1.551328	1.689479	1.83845
10	1.343916	1.480244	1.628895	1.790848	1.96715
11	1.384234	1.539454	1.710339	1.898299	2.10485
12	1.425761	1.601032	1.795856	2.012196	2.25219
13	1.468534	1.665074	1.885649	2.132928	2.40984
14	1.512590	1.731676	1.979932	2.260904	2.57853
15	1.557967	1.800944	2.078928	2.396558	2.75903
16	1.604706	1.872981	2.182875	2.540352	2.95216
17	1.652848	1.947900	2.292018	2.692773	3.15881
18	1.702433	2.025817	2.406619	2.854339	3.37293
19	1.753506	2.106849	2.526950	3.025600	3.61652
20	1.806111	2.191123	2.653298	3.207135	3.86968

To find the amount of any sum greater than $1, multiply the sum by the tabular multiplier, and the product will be the amount for the given time and rate per cent.

Time in which Money Doubles at Interest.

PER CENT.	SIMPLE INTEREST.	COMPOUND INTEREST.
2	50 years	35 years and 1 day.
2½	40 "	28 " " 26 "
3	33 " and 4 months	23 " " 164 "
3½	28 " and 208 days	20 " " 54 "
4	25 "	17 " " 246 "
4½	22 " and 81 days	15 " " 273 "
5	20 "	15 " " 75 "
6	16 " and 8 months	11 " " 327 "
7	14 " and 104 days	10 " " 89 "
8	12½ "	9 " " 2 "
9	11 " and 40 days	8 " " 16 "
10	10 "	7 " " 100 "

TAXES.

The following table is based upon an assessment of 5 mills to the dollar, or ½ per cent,

PROP.	TAX.	PROP.	TAX.	PROP.	TAX.	PROP.	TAX.
$1 gives.....	$.005	$10	$.05	$100	$ .50	$1000	$ 5.00
2 "	.01	20	.10	200	1.00	2000	10.
3 "	.015	30	.15	300	1.50	3000	15.
4 "	.02	40	.20	400	2.00	4000	20.
5 "	.025	50	.25	500	2.50	5000	25.
6 "	.03	60	.30	600	3.00	6000	30,
7 "	.035	70	.35	700	3.50	7000	35.
8 "	.04	80	.40	800	4.00	8000	40.
9 "	.045	90	.45	900	4.50	9000	45.

For any assessment greater, or less than five mills, add to or subtract from amounts given in "Tax" columns.

SQUARE ROOT.

To extract the square root of any number.

RULE.—1. Separate the given number into periods of two places each, by placing a dot over the alternate figures, beginning with units. (The left period will often have but one figure.)

2. Find the greatest square in the left period, and place its root on the right, like a quotient in division. Subtract the square of this root from the left period, and to the remainder bring down the next period for a dividend.

3. Double the root found, and place it on the left for a trial divisor. Find how many times the divisor is contained in the dividend, exclusive of the right hand figure, and place the quotient in the root and also on the right of the divisor.

4. Multiply the divisor thus increased by the last figure of the root; subtract the product from the dividend; to the remainder annex the next period for a new dividend.

5. Double the whole root found for a new trial divisor, and continue the operation as before, until all the periods are used.

EXAMPLE: What is the square root of 2025?

$$\begin{array}{l} \dot{2}0\dot{2}\dot{5}\,(45 \text{ Ans.} \\ \underline{16} \\ 85)425 \\ \underline{425} \end{array}$$

EXAMPLE: What is the square root of 110889?

$$\begin{array}{l} 1\dot{1}0\dot{8}\dot{8}\dot{9}\,(333 \text{ Ans.} \\ \underline{9} \\ 63)208 \\ \underline{189} \\ 663)1989 \\ \underline{1989} \end{array}$$

EXAMPLE: What is the square root of 20857489?

$$
\begin{array}{r}
\dot{2}0\dot{8}5\dot{7}4\dot{8}\dot{9}(4567\ \text{Ans.} \\
16 \\
\hline
85)\ 485 \\
425 \\
\hline
906)\ 6074 \\
5436 \\
\hline
9127)\ 63889 \\
63889 \\
\hline
\end{array}
$$

EXAMPLE: What is the square root of 406457.2516?

$$
\begin{array}{r}
\dot{4}0\dot{6}4\dot{5}7.2\dot{5}1\dot{6}(637.54\ \text{Ans.} \\
36 \\
\hline
123)\ 464 \\
369 \\
\hline
1267)\ 9557 \\
8869 \\
\hline
12745)\ 68825 \\
63725 \\
\hline
127504)\ 510016 \\
510016 \\
\hline
\end{array}
$$

EXAMPLE: What is the square root of 2?

$$
\begin{array}{r}
2.\dot{0}0\dot{0}0\dot{0}0\dot{0}0\dot{0}(1.4142+\text{Ans.} \\
1 \\
\hline
24)\ 100 \\
96 \\
\hline
281)\ 400 \\
281 \\
\hline
2824)\ 11900 \\
11296 \\
\hline
28282)\ 60400 \\
56564 \\
\hline
3836
\end{array}
$$

EXAMPLE: What is the square root of $\frac{2}{3}$?

$$
\begin{array}{r}
\frac{2}{3} = .\dot{6}6\dot{6}6\dot{6}6\dot{6}6\dot{6}6\dot{6}(.81649+\text{Ans.} \\
64 \\
\hline
161)\ 266 \\
161 \\
\hline
1626)\ 10566 \\
9756 \\
\hline
16324)\ 81066 \\
65296 \\
\hline
163289)\ 1577066 \\
1469601 \\
\hline
107465
\end{array}
$$

EXMAPLE: What is the square root of $\frac{25}{729}$?

The square root of $\frac{25}{729} = \frac{5}{27}$ Ans.

" " " $\sqrt{25} = 5$

$\sqrt{729} = 27$

4

47) 329

329

The square root of a common fraction may be obtained by extracting the square roots of the numerator and denominator separately, provided the terms are perfect squares; otherwise, the fraction may be reduced to a decimal.

CUBE ROOT.

To Extract the Cube Root of Any Number.

RULE.—1. Separate the given number into periods of 3 places each, by placing a dot over the units, a dot over the thousands, and so on. (The left period often has only one or two figures.)

2. Find the greatest cube in the left period, and place its root on the right, as in division. Subtract the cube of the root from the left period, and to the remainder bring down the next period for a dividend.

3. Square the root found, and multiply it by 300 for a trial divisor. Find how many times this divisor is contained in the dividend, and write the result in the root. Multiply the last figure of the root by the rest, and by 30; square the last figure of the root, and add these two products to the trial divisor; the sum will be the complete divisor.

4. Multiply the complete divisor by the last figure of the root, and subtract the product from the dividend; to the remainder bring down the next period for a new dividend, and so proceed until all the periods are brought down.

EXAMPLE: What is the cube root of 19683?

19683(27 Ans.

8

$2 \times 2 \times 300 = 1200$ | 11683

$2 \times 7 \times 30 = 420$ | 11683

$7 \times 7 = 49$ | 11683

1669

EXAMPLE: What is the cube root of 70.189453125?

70.189453125(4.125 Ans.

64

$4 \times 4 \times 300 = 4800$ | 6189

$4 \times 1 \times 30 = 120$ | 4921

$1 \times 1 = 1$

4921

$41 \times 41 \times 300 = 504300$ | 1268453

$41 \times 2 \times 30 = 2460$ | 1013528

$2 \times 2 = 4$

506764

$412 \times 412 \times 300 = 50923200$ | 254925125

$412 \times 5 \times 30 = 61800$ | 254925125

$5 \times 5 = 25$

50985025

EXAMPLE: What is the cube root of 36926037)

```
                                  36926037(333 Ans.
                                  27
3 × 3 × 300 =      2700 | 9926
3 × 3 × 30 =        270 | 8937
3 × 3       =         9 |
                   2979 |
33 × 33 × 300 =  326700 | 989037
33 × 3 × 30 =      2970 | 989037
3 × 3       =         9 |
                 329679 |
```

EXAMPLE: What is the cube root of 75955677875?

```
                                  75955677875(4235 Ans.
                                  64
4 × 4 × 300 =     4800 | 11955
4 × 2 × 30 =       240 | 10088
2 × 2       =         4 |
                   5044 |
42 × 42 × 300 =  529200 | 1867677
42 × 3 × 30 =      3780 | 1598967
3 × 3       =         9 |
                 532989 |
423 × 423 × 300 =  53678700 | 268710875
423 × 5 × 30 =       63450 | 268710875
5 × 5       =           25 |
                  53742175 |
```

TIME TABLE.

Showing the number of days from any day in one month to the same day in any other month.

FROM	JAN.	FEB.	MAR.	APL.	MAY	JUNE	JULY	AUG.	SEP.	OCT.	NOV.	DEC.
To January	365	31	59	90	120	151	181	212	243	273	304	334
February	334	365	28	59	89	120	150	181	212	242	273	303
March	306	337	365	31	61	92	122	153	184	214	245	275
April	275	306	334	365	30	61	91	122	153	183	214	244
May	245	276	304	335	365	31	61	92	123	152	184	214
June	214	245	273	304	334	365	30	61	92	122	153	183
July	181	215	243	274	304	335	365	31	62	92	123	153
August	153	184	212	243	273	304	334	365	31	61	92	122
September	122	153	181	212	242	273	303	334	365	30	61	91
October	92	123	151	182	212	243	273	304	335	365	31	61
November	61	92	120	151	181	212	242	273	304	334	365	30
December	31	62	90	121	151	182	212	243	274	304	335	365

EXAMPLE: Look for April at the left hand and September at the top. In the angle is 153.

Value of Articles Per Piece, Reckoning From Price Per Dozen.

1.....	8⅓	10 5/12	12½	14 7/12	16⅔	18¾	20⅝	22 11/12	25	29⅛	31¼	33⅓	35 5/12	37½	39 7/12	41⅔	43¾	45 5/6	47 11/12	50
2.....	17	21	25	29	33	38	42	46	50	58	63	67	71	75	79	83	88	92	96	1.00
3.....	25	31	38	44	50	56	63	69	75	88	94	1.00	1.06	1.13	1.19	1.25	1.31	1.38	1.44	1.50
4.....	33	42	50	56	67	75	83	92	1.00	1.17	1.25	1.33	1.42	1.50	1.58	1.67	1.75	1.83	1.92	2.00
5.....	42	52	63	73	83	94	1.04	1.15	1.25	1.46	1.56	1.67	1.77	1.88	1.98	2.08	2.19	2.29	2.40	2.50
6.....	50	63	75	88	1.00	1.13	1.25	1.38	1.50	1.75	1.88	2.00	2.13	2.25	2.34	2.50	2.63	2.75	2.87	3.00
7.....	58	73	88	1.02	1.17	1.31	1.46	1.60	1.75	2.04	2.19	2.33	2.48	2.63	2.77	2.92	3.06	3.21	3.35	3.50
8.....	67	83	1.00	1.17	1.33	1.50	1.67	1.83	2.00	2.33	2.50	2.67	2.83	3.00	3.17	3.33	3.50	3.67	3.83	4.00
9.....	75	94	1.13	1.29	1.50	1.69	1.88	2.06	2.25	2.63	2.81	3.00	3.19	3.38	3.56	3.75	3.94	4.13	4.31	4.50
10.....	83	1.04	1.25	1.46	1.67	1.88	2.08	2.29	2.50	2.92	3.13	3.33	3.54	3.75	3.96	4.17	4.38	4.58	4.79	5.00
11.....	92	1.15	1.38	1.60	1.83	2.06	2.29	2.52	2.75	3.21	3.44	3.67	3.89	4.13	4.23	4.58	4.81	5.04	5.27	5.50
12.....	1.00	1.25	1.50	1.75	2.00	2.25	2.50	2.75	3.00	3.50	3.75	4.00	4 25	4.50	4.75	5.00	5.25	5.50	5.75	6.00

1	52 1/12	54⅛	56¼	58⅓	60 5/12	62½	64 7/12	66⅔	68¾	70⅝	72 11/12	75	77 1/12	79⅛	81¼	83⅓	87½	91⅔	95 5/6	1.00
2	1.04	1.08	1.13	1.17	1.21	1.25	1.29	1.33	1.38	1.42	1.46	1.50	1.54	1.58	1.63	1.67	1.75	1.83	1.92	2.00
3	1.56	1.63	1.69	1.75	1.81	1.88	1.94	2.00	2.06	2.13	2.19	2.25	2.31	2.38	2.44	2.50	2.63	2.75	2.88	3.00
4	2.08	2.17	2.25	2.33	2.42	2.50	2.58	2.67	2.75	2.83	2.92	3.00	3.08	3.17	3.25	3.33	3.50	3.67	3.83	4.00
5	2.60	2.71	2.81	2.92	3.02	3.13	3.23	3.33	3.44	3.54	3.65	3.75	3.85	3.96	4.06	4.17	4.38	4.58	4.79	5.00
6	3.13	3.25	3.38	3.50	3.63	3.75	3.88	4.00	4.13	4.25	4.38	4.50	4.63	4.75	4.88	5.00	5.25	5.50	5.75	6.00
7	3.65	3.79	3.94	4.08	4.23	4.38	4.52	4.67	4.81	4.96	5.10	5.25	5.40	5.54	5.69	5.83	6.13	6.42	6.71	7.00
8	4.17	4.33	4.50	4.67	4.93	5.00	5.17	5.33	5.50	5.67	5.83	6.00	6.15	6.33	6.50	6.67	7.00	7.33	7.66	8.00
9	4.69	4.88	5.06	5.25	5.44	5.63	5.81	6.00	6.19	6.38	6.56	6.75	6.94	7.13	7.31	7.50	7.88	8.25	8.62	9.00
10	5.21	5.42	5.63	5.83	6.04	6.25	6.46	6.67	6.88	7.08	7.29	7.50	7.71	7.92	8.13	8.33	8.75	9.17	9.58	10.00
11	5.73	5.96	6.19	6.42	6.65	6.88	7.11	7.33	7.56	7.79	8.02	8.25	8.48	8.71	8.94	9.17	9.63	10.08	10.54	11.00
12	6.25	6.50	6.75	7.00	7.25	7.50	7.75	8.00	8.25	8.50	8.75	9.00	9.25	9.50	9.75	10.00	10.50	11.00	11.50	12.00

WEIGHT OF COMMON AXLES.

Long Arm, Per Set.

1⅛ inch, about ..... 54 lbs.	1¾ inch, about .....137 lbs.
1¼ " " ..... 64 "	1⅞ " " .....161 "
1⅜ " " ..... 83 "	2 " " .....188 "
1½ " " .....100 "	2⅛ " " .....210 "
1⅝ " " .....118 "	2¼ " " .....245 "

Railroad freight car and coach axles weigh from 385 to 470 pounds each, according to diameter.

Street car axles run from 2½ to 3½ inches in diameter.

LIGHT WEIGHT SOFT STEEL.

Angles, and Channel Bars.

1½″ × 1½″ angles, 1.20 lbs. per lineal foot.
1¼″ × 1¼″ " 1.00 " " " "
1″ × 1″ " .85 " " " "
⅞″ × ⅞″ " .74 " " " "
¾″ × ¾″ " .65 " " " "
1½″ channel bar, 1.00 lbs. per lineal foot
1¼″ " " .93 " " " "
1″ " " .75 " " " "
⅞″ " " .65 " " " "
¾″ " " .55 " " " "
⅝″ " " .50 " " " "

Square Root Angle Iron.

4″ × 4″ × ⅜″ = 9 lbs. per lineal foot.
3½″ × 3½″ × ⅜″ = 7.6 " " " "
3″ × 3″ × $\frac{5}{16}$″ = 5.9 " " " "
2¾″ × 2¾″ × $\frac{5}{16}$″ = 5.4 " " " "
2½″ × 2½″ × ¼″ = 3.75 " " " "
2¼″ × 2¼″ × ¼″ = 3.5 " " " "
2″ × 2″ × ¼″ = 3.1 " " " "
1¾″ × 1¾″ × ¼″ = 2.7 " " " "
1½″ × 1½″ × $\frac{3}{16}$″ = 1.8 " " " "
1¼″ × 1¼″ × $\frac{3}{16}$″ = 1.4 " " " "
1⅛″ × 1⅛″ × $\frac{3}{16}$″ = 1.3 " " " "
1″ × 1″ × ⅛″ = 0.8 " " " "
⅞″ × ⅞″ × ⅛″ = 0.6 " " " "
¾″ × ¾″ × ⅛″ = 0.4 " " " "

The above are "light patterns" iron.

For steel add 2 per cent to weights given.

Alloys.

	COPPER.	ZINC.	TIN.	NICKEL.	ANTIMONY
Common Brass	84.3	5.2	10.5		
Hard "	79.3	6.4	14.3		
Red Bronze	87		13		
Gun Metal	90	0	10		
German Silver	33.3	33.4	0		33.3
Muntz Metal	60		40		
Pewter	0	0	86	0	14
White Metal	7.4	7.4	28.4	0	56.8

Tin and Lead Alloys.

The following alloys are prepared according to Professor Abel's formulæ, their constituents and melting points being as follows:

CONSTITUENTS. PARTS. TIN.	PARTS. LEAD.	DEG. FAHR. MELTING POINT.
2	1	340
9	4	344
10	4	348
11	4	352
12	4	356
13	4	360
17	4	370
22	4	380
4	5	390
4	6	412
4	7	420
4	9	460
4	12	482
4	15	494
4	17	502
4	20	512
4	25	520
4	30	530
4	38	540
4	48	550
4	70	558
		Melting point of lead = 620

An alloy made of 12 parts of tin, 25 of lead, 13 of cadmium, and 50 of bismuth, will melt at 155 degrees. Another made of 3 parts of tin, 5 of lead, and 8 of bismuth, will melt at 210 degrees, or in boiling water.

Weight of Anchors.

Table showing average weight per 100 feet and weights of anchors to correspond for chain cables.

SIZE OF CHAIN. INCHES.	AVERAGE WEIGHT PER 100 FEET. SHORT LINK. LBS.	WEIGHT OF ANCHOR. LBS.	PROOF. LBS.
5/16	122	100	2,250
3/8	160	125	4,000
7/16	200	150	5,000
1/2	250	200	7,000
9/16	320	250	9,000
5/8	420	300	11,000
11/16	500	400	13,500
3/4	590	500	16,000
13/16	670	600	19,000
7/8	790	700	22,000
15/16	900	800	25,000
1	1020	900	28,500
1 1/16	1150	1100	32,000
1 1/8	1270	1300	36,000
1 3/16	1420	1500	40,000
1 1/4	1580	1600	44,000
1 5/16	1720	1800	48,000
1 3/8	1880	1900	52,000
1 7/16	2050	2200	56,000
1 1/2	2220	2400	60,000

Air.

A cubic foot of air at 60 deg. and under a pressure of 14.7 pounds per square inch, weighs 536 grains, and 13.06 cubic feet weigh one pound.

Air expands or contracts an equal amount with each degree of variation in temperature.

According to Mariotte, air will take 15 pounds pressure to compress it one-half its bulk, 30 pounds to compress it one-half its remaining bulk, and so on to infinity.

Velocity of Air Under Pressure.

Table of pressures per sq. inch in ounces, from ¼ to 20 ounces; which includes the strongest blast ever found on any cupola in this country.	Table of velocity in feet per minute of Air (at 50° temperature Fahrenheit) escaping into open air through any shaped hole from any pipe or reservoir in which the air is compressed.	Table giving the number of cubic feet of Air per minute (at 50° Fahrenheit), which may be discharged through a proper shaped mouth piece, the diameter of which must be 1.362 inches, the area being 1.07 inches.
¼	2584.80	17.944
½	3657.60	25.400
¾	4482.00	31.124
1	5175.00	35.93
2	7338.24	50.96
3	9006.42	62.54
4	10421.58	72.37
5	11676.00	81.08
6	12817.08	89.01
7	13872.72	96.34
8	14861.16	103.20
9	15795.06	109.69
10	16683.51	115.86
11	17533.50	121.76
12	18350.34	127.43
13	19138.26	132.90
14	19900.68	138.20
15	20640.48	143.34
16	21360.00	148.33
17	22060.80	153.26
18	22745.40	157.96
19	23415.00	162.60
20	24070.80	167.16

Weight of Pure Aluminium and Aluminium Bronze, in Sheets.

BROWN & SHARPE'S GAUGE. NO.	THICKNESS IN DECIMALS OF 1 IN.	PURE ALUMINIUM WEIGHT, 1 SQ. FOOT.	"A" GRADE Al BRONZE WEIGHT 1 SQ. FOOT.	"C" GRADE Al BRONZE WEIGHT 1 SQ. FOOT.
		LBS.	LBS.	LBS.
0000	.460	6.624	18.676	19.872
000	.410	5.904	16.646	17.712
00	.365	5.2560	14.8190	15.7680
0	.325	4.6800	13.1950	14.040
1	.290	4.1760	11.774	12.528
2	.258	3.7152	10.4748	11.1456
3	.230	3.312	9.338	9.936
4	.205	2.9520	8.3230	8.8560
5	.182	2.6208	7.3892	7.8624
6	.162	2.3328	6.5772	6.9984
7	.145	2.0880	5.8870	6.2640
8	.129	1.8576	5.2374	5.5728
9	.115	1.6560	4.6690	4.9680
10	.102	1.4688	4.1412	4.4064
11	.0907	1.30608	3.68242	3.91824
12	.0808	1.16352	3.28048	3.490
13	.0720	1.0368	2.9232	3.1104
14	.0640	.9216	2.5984	2.7648
15	.0570	.8008	2.3142	2.4624
16	.0508	.73152	2.06248	2.19456
17	.0453	.65232	1.83918	1.95696
18	.0403	.58032	1.63618	1.74096
19	.0359	.51692	1.45754	1.55088
20	.0320	.4608	1.2992	1.3824
21	.0285	.41040	1.15710	1.23120
22	.0254	.36576	1.03124	1.09728
23	.0225	.32400	.91350	.97200
24	.0201	.28944	.81606	.86832
25	.0179	.25776	.72674	.77328
26	.0160	.2304	.6496	.6912
27	.0142	.20448	.57652	.61344
28	.0127	.18288	.51562	.54864
29	.0113	.16272	.45878	.48816
30	.0100	.1440	.40600	.43200
31	.00893	.128592	.362528	.385776
32	.00795	.114480	.322770	.343440
33	.00708	.101952	.287448	.305856
34	.00630	.09072	.25578	.27216
35	.00561	.08078	.227766	.242352
36	.00500	.07200	.20300	.2160
37	.00445	.064080	.180670	.192240
38	.00397	.057168	.161182	.171504
39	.00353	.050832	.143318	.152496
40	.00314	.045216	.127484	.135648
Specific gr.	.....	2.77	7.85	8.3
Wt. 1 sq. foot, 1 in. thick.	.....	14.40 lbs.	40.6 lbs.	43.2 lbs.

Aluminum melts at 1,300 deg. Fahr.

Aluminum is not attacked by nitric acid, but is dissolved by hydrochloric acid. Sulphur does not attack it. It is stained by perspiration.

The following table gives the dimensions of lots containing one acre.

10	rods	× 16	rods	= 1 acre.
8	"	× 20	"	= 1 "
5	"	× 32	"	= 1 "
4	"	× 40	"	= 1 "
5	yds.	× 968	yds.	= 1 "
10	"	× 484	"	= 1 "
20	"	× 242	"	= 1 "
40	"	× 121	"	= 1 "
220	feet	× 198	feet	= 1 "
110	"	× 396	"	= 1 "
60	"	× 726	"	= 1 "
120	"	× 363	"	= 1 "
400	"	× 108.9	"	= 1 "
300	"	× 145.2	"	= 1 "
100	"	× 435.6	"	= 1 "

SPECIFICATIONS OF TUBULAR STATIONARY BOILERS.

Fifteen Square Feet Heating Surface Per Horse-Power.

HORSE-POWER.	10	12	15	20	20	25	30	35	40	40
Diameter Boiler, in inches	32	34	36	36	42	42	44	44	44	48
Length of Flues, in feet	7	7	8	10	8	10	10	12	14	12
No. of Flues, 3 inch diameter	20	25	28	30	38	38	46	46	46	52
Square Feet Heating Surface	152	185	221	304	306	380	447	534	621	600
Diameter of Stack Surface	14	16	16	18	20	20	22	22	22	22
Length of Stack, in feet	28	24	28	35	28	35	35	40	50	40
Wt. Boiler and Britchen, about	1900	2300	2550	3050	3450	4050	4400	5050	5700	6000
Wt. of Boiler Fixtures, about	1500	1650	1700	2000	2250	2550	2650	2950	3250	3400
Wt. Boiler and Fixtures, about	3400	3950	4250	5050	5700	6600	7050	8000	8950	9400

HORSE-POWER.	45	50	60	60	70	80	90	100	125	
Diameter Boiler, in inches	48	54	54	60	60	60	66	66	72	.....
Length of Flues, in feet	14	12	15	12	14	16	15	16	16	.....
No. of Flues, 3 inch diameter	52	66	64	82	82	82	100	102	132	.....
Square Feet Heating Surface	698	748	906	915	1064	1213	1370	1485	1882	.....
Diameter of Stack, Surface	22	26	26	28	28	28	30	30	36	.....
Length of Stack, in feet	50	40	50	40	50	60	60	60	60	.....
Wt. Boiler and Britchen, about	6800	7400	8700	8950	9950	11100	12900	13600	16500	.....
Wt. of Boiler Fixtures, about	3750	3750	4050	4350	4750	4950	5400	5600	6500	.....
Wt. Boiler and Fixtures, about	10550	11150	12750	13300	14700	16050	18300	21000	23000	.....

The horse-power given above is a commercial rating.

SPECIFICATIONS OF CYLINDER BOILERS.

HORSE POWER.	13	14	16	18	21	23	26	28
Diameter of Boiler, in inches	26	28	30	32	34	36	38	40
Length of Boiler, in feet	30	30	30	30	36	36	40	40
Diameter of Dome, in inches	20	20	20	20	20	20	20	20
Height of Dome, in inches	22	22	22	22	22	22	22	22
Diameter of Stack, in inches	16	18	18	20	22	22	22	24
Length of Stack, in feet	30	30	30	30	40	40	50	50
Weight of Boiler, about	3100	3300	3500	4000	4900	5700	6600	6900

TWO-FLUE BOILERS.

HORSE-POWER.	DIAMETER, INCHES.	LENGTH, FEET.	DIAMETER OF FLUES, INCHES.	SIZE OF DOME, INCHES.	DIAMETER OF STACK, INCHES.	THICKNESS OF SHELL, INCHES.	THICKNESS OF HEADS, INCHES.
15	42	16	14	24x24	24	¼	⅜
20	42	18	14	24x24	24	¼	⅜
30	44	20	16	26x26	26	¼	⅜
40	48	20	18	26x26	30	5/16	½
45	48	24	18	30x30	30	5/16	½
50	60	20	24	30x30	30	5/16	½
60	60	26	24	30x30	30	5/16	½

HORIZONTAL TUBULAR BOILERS.

With 4-inch Tubes.

Horse-Power.....	30	35	40	45	50	60	70	80	90	100	125
Diameter in inches ..	42	46	46	50	50	54	54	60	62	66	72
Length in feet.....	12	12	14	12	14	14	16	16	16	16	16
Diam. of Tubes, in...	4	4	4	4	4	4	4	4	4	4	4
Length of Tubes, ft..	12	12	14	12	14	14	16	16	16	16	16
Number of Tubes....	22	26	26	35	35	42	42	50	55	64	80
Size of Dome, inches	22x22	24x24	24x24	28x28	28x28	30x30	30x30	36x36	36x36	36x40	40x40
Approx.Wt. of Boiler	3900	4300	4800	5300	6000	7600	8500	9900	11000	12500	14500

SIX-INCH FLUE BOILER.

Horse-Power.....	25	30	35	40	50	60	70	75	90	112
Diameter in inches	40	44	44	48	50	54	58	60	66	72
Length in feet.....	14	14	17	16	18	20	20	20	20	20
Number of Flues	7	8	8	10	12	12	15	16	20	26
Size of Dome in inches.....	22x22	24x24	24x24	28x28	30x30	30x30	36x36	36x36	36x40	40x40
Approx. Wt. of Boilers.....	3850	4300	5050	6000	7500	8600	10000	10900	13100	15400

SCOTCH MARINE BOILER.

Twelve Square Feet of Heating Surface to the Horse-Power.

HORSE-POWER.	SHELL.	FIRE BOX FLUE.	TUBES.			DOME.	HEATING SURFACE.	APPROXIMATE WEIGHT.
	DIAMETER. LENGTH.	DIAMETER. LENGTH.	NUMBER.	SIZE.	LENGTH.	DIAMETER. HEIGHT.		
	Inches.	Inches.		Inches.	Inches.	Inches.	Sq. Ft.	Pounds.
6	36x48	18x40	32	2	40	18x12	73	2250
8	36x54	18x46	40	2	46	18x14	98	2550
10	42x54	21x46	52	2	46	20x16	121	2950
12	44x60	22x50	58	2	50	20x16	145	3150
15	48x66	24x54	68	2	54	24x16	181	4150
20	54x72	26x60	82	2	60	26x18	242	4900

Specifications of Submerged Tubular Boilers.

HORSE-POWER.	5	8	10	12	13	14	15	18	20	25	30	35	40	45	50
Diameter in inches	24	30	30	30	34	34	36	36	42	42	48	48	48	54	54
Height in inches	60	60	72	84	72	84	84	96	96	108	102	108	120	114	120
Height of fire box	24	27	28	28	28	28	30	30	30	30	30	30	30	30	30
Number of tubes	31	54	54	54	70	70	70	70	85	91	134	134	134	174	174
Diameter of tubes in ins.	2	2	2	2	2	2	2	2	2	2	2	2	2	2	2
Length of tubes in ins.	18	19	27	38	27	38	38	48	42	57	45	51	63	54	60
Diameter of stack in ins.	11½	11½	15½	15½	17	17	18	18	20	21	24	24	24	26	26
Weight of boiler	700	1075	1250	1450	1450	1700	1930	2200	2600	3250	4000	4200	4600	5200	5400

Plain Vertical Tubular Boilers.

VERTICAL SEAMS DOUBLE RIVETED.

HORSE-POWER.	3	4	5	6	8	10	12	14	16	20	25	30	35
Diameter in inches	20	24	24	26	30	30	36	36	36	42	42	42	48
Height in inches	48	50	60	60	60	72	72	84	96	96	108	120	96
Height of fire box	18	18	22	22	22	24	24	28	32	32	32	34	34
Number of tubes	28	31	31	37	43	49	61	61	61	79	85	91	138
Diameter of tubes, inches	2	2	2	2	2	2	2	2	2	2	2	2	2
Length of tubes, inches	30	32	40	38	38	48	48	56	64	64	76	86	64
Diameter of stack, inches	10	11½	11½	15½	15½	17	18	18	18	20	20	20	24
Weight of boiler	600	800	1000	1100	1200	1400	1700	2000	2500	3200	3500	3800	4000

Specifications of Portable Boilers.

HORSE-POWER.	6	8	10	12	15	20	25	30	35	40	50
Diameter of boiler, in inches	26	28	30	32	32	34	36	40	40	40	44
Length of furnace, in inches	34	36	38	38	44	52	52	60	60	60	64
Width of furnace in inches	21	22	24	26	26	28	30	34	34	34	38
Height of furnace, in inches	29	33	35	35	35	37	40	43	43	43	50
Number tubes, 3 inches diameter	17	20	22	26	26	30	34	40	42	42	48
Length of tubes, in inches	60	72	78	72	78	90	96	96	108	126	138
Diameter of stack, in inches	12	14	14	16	16	16	18	20	20	20	22
Length of stack, in feet	18	20	20	20	20	24	24	30	35	40	40
Length of boiler over all, in feet	9	10½	11	10¾	12	13½	14	14½	15½	17	18½
Weight of boiler on skids	2600	3150	3650	3900	4150	5100	5800	7000	7450	7900	9900
Weight of boiler fixtures	450	500	550	600	650	950	1000	1150	1250	1350	1500
Weight of boiler and fixtures	3050	3650	4200	4500	4800	6050	6900	8150	8700	9300	11400

PORTABLE BOILERS, LOCOMOTIVE STYLE.

Water Fronts and Open Bottom.

HORSE-POWER.	8	9	10	12	15	20	25	30	35	40	50	60	70	80
Diam'r of Boiler in inches	28	28	30	32	32	34	36	36	40	42	44	48	54	56
Length of Fire Box in inches.	36	36	38	38	44	52	52	52	52	54	64	64	64	64
Height of Fire Box in inches.	30	30	31	33	33	36	38	40	42	46	48	52	52	54
Width of Fire Box in inches.	23	23	25	27	27	29	31	31	35	37	39	43	49	51
Number 3-inch Tubes	18	18	22	26	26	28	34	34	40	43	48	56	60	66
Length of Tubes in inches	66	74	78	72	78	90	96	120	102	120	132	144	150	156
Size of Dome.	15x18	16x18	16x18	18x20	18x20	20x22	22x24	22x24	24x26	24x26	26x30	28x30	30x32	34x36
Diam. of Smoke Stack in in.	13	13	15	16	17	18	18	18	20	20	22	24	26	26
L'ngth of Smoke Stack in feet.	15	15	15	18	20	25	25	25	25	30	35	35	35	35
W'ight of boiler	3200	3400	3800	4360	4600	5900	6600	7100	7800	8700	10500	11500	13000	14500

Number of Brick Required for Setting Stationary Boilers with Full Flush Fronts.

HORSE-POWER OF BOILER.	DIAMETER OF BOILER IN INCHES.	LENGTH OF BOILER IN FEET.	NUMBER OF FIRE BRICK.	NO. OF COMMON BRICK ABOVE FLOOR LEVEL.
10	32	8	300	5500
12	34	8	300	5700
15	36	8	350	6000
20	36	10	400	6300
25	40	10	400	8000
30	42	12	500	10000
35	44	12	500	10300
40	44	14	500	12000
45	48	12	550	14000
50	48	14	600	15500
60	54	14	700	18500
70	54	16	700	20000
80	60	16	800	24000
90	62	16	800	24000
100	66	16	1000	25500
125	72	16	1200	27500

Number of Bricks Required for Setting Stationary Boilers with Half Arch Fronts.

HORSE-POWER OF BOILER.	DIAMETER OF BOILER IN INCHES.	LENGTH OF BOILER IN FEET.	NUMBER OF FIRE BRICK.	NO. OF COMMON BRICK ABOVE FLOOR LEVEL.
10	32	8	300	3200
12	34	8	300	3400
15	36	8	350	5700
20	36	10	400	6000
25	40	10	400	7400
30	42	12	500	9600
35	44	12	500	10000
40	44	14	500	11800
45	48	12	550	13500
50	48	14	600	15000
60	54	14	700	18000
70	54	16	700	19500
80	60	16	800	23400
90	62	16	800	23400
100	66	16	1000	24800
125	72	16	1200	26700

BOILER POWER.

The Centennial Exposition standard is: The evaporation of 30 pounds of water per hour from feed water having a temperature of 100 degrees Fahrenheit, into steam having a pressure of 70 pounds per square inch above the atmosphere, is equal to one horse-power. The American Society of Mechanical Engineers' standard is: The evaporation of 34½ pounds of water per hour from and at 212 degrees Fahrenheit.

The difference between the two standards is only about $\frac{1}{30}$ of one per cent., consequently they are practically the same. With a 60-inch tubular boiler, properly made, well set, and carefully fired—from 8 to 10 pounds of water to one pound of coal should be made into steam of 60 pounds pressure per square inch. This result would depend upon the quality of the coal, and the temperature of the feed water.

Practically no more coal will be required to convert one pound of water into steam at 80 pounds, than it will at 60 pounds.

Theoretically, however, it will require $\frac{4}{10}$ of one per cent., or about $\frac{1}{250}$ part more.

Table Giving Horse-Power of Boilers the Following Sizes:

Diameter Shell. Inches.	Length Shell. Feet.	Number Tubes.	Length Tubes. Feet.	Diameter Tubes. Inches.	Heating Surface. Square Feet.	Horse-Power. 60 lbs. Pressure.
72	18	70	18	4	1502	100
72	16	90	16	3½	1472	98
72	16	112	16	3	1496	99
72	15	112	15	3	1400	93
60	18	65	18	3½	1200	80
60	17	65	17	3½	1148	76
60	16	65	16	3½	1075	72
60	16	80	16	3	1088	72
60	15	80	15	3	1020	68
60	14	80	14	3	952	63
60	13	80	13	3	884	59
54	18	50	18	3½	951	63
54	17	50	17	3½	900	60
54	16	50	16	3½	795	53
54	16	60	16	3	832	55
54	15	60	15	3	780	52
54	14	60	14	3	728	48
54	13	60	13	3	676	45
54	12	60	12	3	624	41
48	16	40	16	3½	683	46
48	16	49	16	3	684	46
48	15	49	15	3	642	43
48	14	49	14	3	600	40
48	13	49	13	3	555	37
48	12	49	12	3	513	34
48	11	65	11	2½	542	36
48	10	65	10	2½	495	33
42	15	38	15	3	508	34
42	14	38	14	3	476	32
42	13	38	13	3	441	30
42	12	38	12	3	408	27
42	11	45	11	2½	390	26
42	10	45	10	2½	355	24
42	9	45	9	2½	320	22
42	8	45	8	2½	285	19
42	7	45	7	2½	248	16

Table of Pressures, Allowed by U. S. Authorities, on Steamboats Plying on the Mississippi River and Tributaries.

THICKNESS OF IRON IN INCHES.	DIAMETER OF BOILER IN INCHES.													
	34	36	38	40	42	44	46	48	50	52	54	56	58	60
	LBS.	LBS.	LBS.	LBS.	LBS.	LBS.	LBS.	LBS.	LBS.	LBS.	LBS.	LBS.	LBS.	LBS.
.19	140	133	126	119	114	108	104	99	95	92	88	85	82	79
.20	148	140	132	126	120	114	109	105	100	96	93	90	86	84
.21	155	147	139	132	126	120	115	110	105	101	98	94	91	88
.22	163	154	149	138	132	126	120	115	111	106	102	99	95	92
.23	170	161	152	144	138	131	126	120	115	111	107	103	99	96
.24	177	168	159	151	144	137	131	126	120	117	112	108	104	100
.25	185	175	165	157	150	143	136	131	126	121	116	112	108	105
.26	192	182	172	163	156	148	142	136	131	126	121	117	113	109
.27	200	189	179	170	162	154	147	141	136	130	126	121	117	113
.28	207	191	185	176	168	160	152	147	141	135	130	126	121	117
.29	214	203	192	182	174	166	158	152	146	140	134	130	126	121
.30	222	210	198	189	180	171	164	157	151	145	140	135	130	126
.31	229	217	205	195	186	177	169	162	156	150	144	139	134	130

To find the pressure allowed on other size boilers—not given in the above table—multiply 12,600 by the thickness of iron in inches, and divide the product by the radius of boiler in inches. The quotient will be the required pressure in pounds per square inch. The U. S. rule for finding safe working boiler pressures is as follows:

Multiply $\frac{1}{6}$ of the lowest tensile strength found stamped on any plate in the cylindrical shell by the thickness in inches of the thinnest plate in the same shell, and divide the product by the radius of shell in inches. The quotient will be the pressure per square inch for single riveted boilers. Add 20 per cent for double riveted boilers.

EXAMPLE: Required the pressure for a boiler 72 inches in diameter, iron in shell being $\frac{7}{16}$″ thick.

$\frac{7}{16} = .4375.$

Then, $12{,}600 \times .4375 = 5512.5000$

And $\frac{5512.5000}{36} = 153$ lbs. nearly. Ans.

EXAMPLE: Required the pressure for a boiler 72 inches in diameter, lowest tensile strength of plates being 65,000 lbs. per square inch, and thinnest plate being $\frac{7}{16}$″ in thickness, all seams double riveted?

$\frac{7}{16} = .4375$

$\frac{65{,}000}{6} = 4739.4375$

$\frac{4739.4375}{36} = 131.65$ lbs.

$\frac{131.65}{5} = 26.33 = 20$ per cent.

131.65
26.33

157.98 lbs. pressure. Ans.

The slight discrepancy between this result and that obtained in preceding example results from the fact that 65,000 lbs. is an assumed T. S.

Shells of Boilers.

RESISTANCE TO INTERNAL OR BURSTING PRESSURE.

DIAMETER.	THICKNESS	BURSTING PRESS. PER SQUARE INCH. SINGLE RIVETED.	BURSTING PRESS. PER SQUARE INCH. DOUBLE RIVETED.	DIAMETER.	THICKNESS	BURSTING PRESS. PER SQUARE INCH. SINGLE RIVETED.	BURSTING PRESS. PER SQUARE INCH. DOUBLE RIVETED.
Feet.	Ins.	Lbs.	Lbs.	Feet.	Ins.	Lbs.	Lbs.
2.	1/4	573	745	7.6	5/16	191	248
2.6	1/4	458	596	7.6	3/8	229	298
3.	1/4	382	496	8.	5/16	179	233
3.4	1/4	318	414	8.	3/8	215	279
3.4	5/16	398	518	8.6	5/16	168	219
3.6	1/4	327	426	8.6	3/8	202	263
3.6	5/16	409	532	9.	5/16	159	207
4.	1/4	286	372	9.	3/8	191	248
4.	5/16	358	465	9.6	5/16	150	196
4.6	1/4	254	331	9.6	3/8	181	235
4.6	5/16	318	413	10.	5/16	143	186
5.	1/4	229	298	10.	3/8	172	224
5.	5/16	286	372	10.	1/2	229	298
5.6	1/4	208	270	10.6	5/16	136	177
5.6	5/16	260	338	10.6	3/8	163	212
5.6	3/8	312	406	10.6	1/2	218	284
6.	1/4	191	248	11.	3/8	156	203
6.	5/16	239	311	11.	1/2	208	271
6.	3/8	286	372	11.6	3/8	149	194
6.6	5/16	220	287	11.6	1/2	199	259
6.6	3/8	264	344	12.	3/8	143	166
7.	5/16	204	266	12.	1/2	191	248
7.	3/8	245	319				

Tensile resistance of the plates without riveting is taken at a mean of 55,000 pounds per square inch.

The single-riveted are estimated at .5 the resistance of the plates, and the staggered riveted at .65.

Such allowances for the resistance and wear of the plates, oxydation, etc., are to be made, as the character of the metal, the nature of the services, and the circumstances of using fresh or salt water, etc., will render necessary.

In riveted plates it is customary, in practice, to estimate the safe tensile resistance of the metal of a boiler or tube, when exposed to salt water, at one-fifth of its ultimate resistance or bursting pressure; and, when exposed to fresh water alone, at one-fourth of it.

HEATING SURFACE OF BOILERS.

The extent of the heating surface of a boiler depends on the length and diameter of the shell and the number and size of the tubes or flues.

When setting boilers in brick work, the practice is to rack in the side walls to the shell a few inches below the water line, and thus limit the heating surface.

It is customary in calculating the heating surface of the shell to consider that two-thirds of it is exposed to the action of heat.

It is also customary to consider that the entire surface of the tubes or flues is exposed to the action of heat.

From the table given below, the heating surface of any boiler can be obtained with ease.

TABLE OF HEATING SURFACE.

Diameter of Boiler in inches	24	26	28	30	32	34	36	38	40	42	44	46	48	50	52	54	56	58	60	62	64	66	68	70	72
Two-thirds Heating Surface of Shell per foot of Length	4.19	4.54	4.89	5.24	5.59	5.93	6.28	6.63	6.98	7.33	7.68	8.03	8.38	8.73	9.08	9.42	9.77	10.12	10.47	10.82	11.17	11.52	11.87	12.22	12 57
Diameter of Tube or Flue, inch	2	2¼	2½	2¾	3	3¼	3½	3¾	4	4½	5	6	7	8	9	10	11	12	13	14	15	16	17	18	20
Whole External Heating Surface per foot of Length	524	.589	.655	.720	.785	.850	.916	.982	1.05	1.18	1.31	1.57	1.83	2.09	2.36	2.62	2.88	3.14	3.40	3.66	3.93	4.19	4.45	4.71	5.24

In estimating the heating surface of a boiler, proceed as follows: Take two-thirds of the outer surface of the shell, and the whole of the inner surface of the tubes or flues. Reduce the whole to square feet, and divide by 12 for two-flue boilers, and by 15 for multi-tubular boilers. The quotient will be the horse-power approximately.

Proportions, Heating Surface and Horse Power of Standard Horizontal Boilers.

TWO-THIRDS OF THE SHELL, AND THE WHOLE OF TUBES TAKEN AS HEATING SURFACE.

BOILERS WITH TWO FLUES.					BOILERS WITH 6-INCH FLUES.					BOILERS WITH 4-INCH TUBES.					BOILERS WITH 3½-INCH TUBES.					BOILERS WITH 3-INCH TUBES.				
SHELL.					SHELL.					SHELL.					SHELL.					SHELL.				
Diameter. Inches.	Length. Feet.	Diameter of Flues. Inches.	Heating Surface. Square Feet.	Horse-Power at 8 Feet.	Diameter. Inches.	Length. Feet.	Number of Tubes.	Heating Surface. Square Feet.	Horse-Power at 10 Feet.	Diameter. Inches.	Length. Feet.	Number of Tubes.	Heating Surface. Square Feet.	Horse-Power at 12 Feet.	Diameter. Inches.	Length. Feet.	Number of Tubes.	Heating Surface. Square Feet.	Horse-Power at 12½ Feet.	Length. Feet.	Diameter. Inches.	Number of Tubes.	Heating Surface. Sq. ft.	Horse-Power at 15 feet.
32	12	10	130	16.2	40	14	7	252	25.2	42	12	22	365	30.4	42	12	25	363	29.0	42	12	45	512	34.1
	14		152	19.0		16		288	28.8		14		425	35.4		14		423	33.9		14		597	39.8
	16		173	21.6		18		324	32.4		16		486	40.5		16		484	38.7		16		682	45.5
36	14	12	176	22.0	44	14	8	283	28.3		18		547	45.6		18		545	43.6		18		737	49.2
	16		201	25.1		16		324	32.4	46	12	26	423	35.2	44	12	30	422	33.8	44	12	48	545	36.2
	18		227	28.4		17		344	34.4		14		494	41.2		14		493	39.4		14		635	42.3
	20		252	31.5		18		364	36.4		16		564	47.1		16		563	45.0		16		725	48.4
40	16	13	220	27.5		20		405	40.5		18		635	52.9		18		633	50.6		18		816	54.5
	18		248	31.0	48	16	10	386	38.6	50	12	35	545	45.4	48	12	40	541	43.3	48	12	50	571	38.1
	20		276	34.0		18		434	43.4		14		636	53.0		14		631	50.5		14		666	44.4
	22		303	37.8		20		482	48.2		16		726	60.5		16		721	57.7		16		766	51.0
42	18	14	264	33.0		22		530	53.0		18		817	68.1		18		812	64.9		18		857	57.2
	20		293	36.5	50	18	12	497	49.7	54	12	42	641	53.4	54	12	48	640	57.2	54	12	66	735	49.0
	22		322	40.2		20		552	55.2		14		748	62.3		14		748	59.8		14		857	57.0
	24		352	44.0		22		607	60.7		16		855	71.2		16		855	68.4		16		979	65.3
44	18	15	280	35.0	54	18	12	509	50.9		18		962	80.2		18		962	77.0		18		1102	73.5
	20		311	38.8		20		566	56.6	60	14	50	880	73.3	60	14	56	865	69.2	60	14	80	1025	68.4
	22		341	42.6		22		622	62.2		16		1006	83.8		16		989	79.1		16		1166	77.7
	24		373	46.6	58	18	15	607	60.7		18		1131	94.2		18		1130	90.4		18		1312	87.5
48	18	18	321	40.1		20		674	67.4		20		1257	104.7		20		1272	101.7		20		1458	97.2
	20		356	44.5		22		741	74.1	62	14	55	958	79.8	62	14	64	973	77.8	62	14	82	1043	69.9
	22		392	49.0	60	18	16	641	64.1		16		1095	91.2		16		1112	89.0		16		1193	79.5
	24		427	53.4		20		712	71.2		18		1232	102.7		18		1251	100.0		18		1353	90.2
	26		464	58.0		22		784	78.4		20		1369	114.1		20		1390	111.2		20		1503	100.2
50	18	18	327	40.9	66	18	20	773	77.3	66	14	64	1100	91.7	66	14	72	1085	86.8	66	14	102	1282	85.4
	20		363	45.4		20		859	85.9		16		1257	104.7		16		1240	99.2		16		1465	97.6
	22		399	49.9		22		945	94.5		18		1414	117.8		18		1395	111.6		18		1648	109.8
	24		435	54.3	72	18	26	961	96.1		20		1571	130.9	72	20		1550	124.0		20		1831	122.0
	26		472	59 0		20		1067	106.7	72	16	80	1545	128.8		16	92	1548	123.8	72	16	132	1859	124.0
	28		508	63.5		22		1174	117.4		18		1738	144.8		18		1742	139.4		18		2091	139.4
											20		1931	161.0		20		1936	154.9		20		2323	155.0

The horse-power of boilers is generally rated at much below what the boilers are capable of when furnishing steam to first-class engines. The number of square feet of heating surface allowed in these tables is ample to evaporate sufficient water for one horse-power according to the Centennial Standard (30 lbs. water evaporated at 70 lbs. steam pressure from feed water at 100° F.); also for first-class automatic cut-off engines. Where boilers are properly set and handled, the figures named, with economical engines, can be exceeded 25 per cent.

Table of heating surface per horse-power in different styles of boilers; the rate of combustion of coal per hour, per square foot of fire surface, required for that rating; the relative economy, and the rapidity of steaming.

	SQ. FT. FOR ONE HORSE-POWER.	COAL FOR EACH SQ. FOOT.	RELATIVE ECONOMY.	RELATIVE RAPIDITY OF STEAMING.
Water Tube	10 to 12	.3	1.00	1.00
Tubular	14 to 18	.25	.91	.50
Flue	8 to 12	.4	.79	.25
Plain Cylinder	6 to 10	.5	.69	.20
Locomotive	12 to 16	.275	.85	.55
Vertical Tubular	15 to 20	.25	.80	.60

Weight of Circular Steel Boiler Heads.

DIAM. INCHES.	THICKNESS OF STEEL—INCHES.						
	3/16	1/4	5/16	3/8	7/16	1/2	9/16
24	24	32	41	49	57	65	73
26	29	38	47	57	67	76	86
28	33	44	55	66	77	88	98
30	38	51	63	76	89	101	113
32	43	58	72	86	101	115	130
34	49	65	81	98	114	130	145
36	55	73	91	109	128	146	162
38	61	81	102	123	142	163	182
40	68	90	113	135	158	180	203
42	75	99	124	149	174	199	223
44	82	109	136	164	191	218	245
46	89	119	149	179	209	239	268
48	97	130	162	192	227	259	292
50	106	141	176	211	246	281	317
52	114	152	190	228	266	304	343
54	123	164	205	246	287	328	369
56	132	177	221	265	309	353	397
58	142	189	237	284	331	379	426
60	.....	204	254	305	356	408	457
64	.....	233	291	349	407	466	521
66	.....	248	310	371	435	495	557
68	.....	263	329	394	460	526	591
70	.....	279	348	418	487	557	627
72	.....	295	368	442	516	589	663
74	.....	311	389	467	545	623	700
76	.....	328	410	492	575	657	739
78	.....	346	432	519	605	692	778
80	.....	367	458	550	641	733	830

Weight of Circular Iron Boiler Heads.

DIAM. IN INCHES.	THICKNESS OF IRON—INCHES.						
	3/16	1/4	5/16	3/8	7/16	1/2	9/16
	Pounds.	Pounds.	Pounds.	Pounds.	Pounds.	Pounds.	Pounds.
16	11	14	18	21	25	28	32
18	13	18	22	27	31	36	40
20	17	22	27	33	38	44	50
22	20	27	33	40	47	54	60
24	24	32	40	47	55	64	71
26	28	37	46	56	64	75	84
28	32	43	53	65	75	86	97
30	37	50	62	74	87	100	112
32	42	56	70	84	99	112	127
34	48	64	79	96	111	128	143
36	54	71	89	108	125	142	161
38	60	79	99	120	139	158	179
40	66	88	110	132	154	176	198
42	73	97	121	146	170	194	220
44	80	107	133	160	187	214	240
46	88	117	145	176	204	234	262
48	95	127	158	190	222	254	286
50	103	138	172	206	241	276	310
52	112	149	186	224	260	298	335
54	121	160	200	242	281	320	362
56	130	172	214	260	302	344	389
58	139	185	231	278	324	370	417
60	149	198	247	298	346	396	446

To Find the Strain on the Cylindrical Part of a Boiler.

RULE: Multiply the diameter in inches by the length in inches, and the product by the steam pressure per square inch.

To Find the Stress per Square Inch of Iron in a Cylindrical Boiler.

RULE: Multiply the inner radius in inches by the steam pressure per square inch, and divide the product by the thickness in inches; the quotient will be the stress per square inch of metal.

To Find the Thickness of Plate for a Given Pressure.

RULE: Multiply the pressure by the radius of boiler in inches, and divide by $\frac{1}{6}$ of the tensile strength of boiler plate—for single riveted longitudinal seams.

For double riveted longitudinal seams:

From the pressure subtract the pressure multiplied by the decimal .16, and multiply the remainder by the radius in inches. Divide this product by $\frac{1}{6}$ of the tensile strength of plate.

To Find the Bursting Pressure per Square Inch on a Boiler.

RULE: From the distance from center to center of rivets subtract the diameter of rivet hole. Divide the remainder by the first number. This result gives the percentage of solid plate.

Next, multiply the tensile strength of plate by its thickness in parts of an inch, and this product by the percentage of solid plate.

Divide this result by one-half the diameter of boiler, and the quotient will be the bursting pressure per square inch.

EXAMPLE.

What is the bursting pressure, per square inch, on a boiler 54 inches diameter, plates $\frac{5}{16}$ inch thick, tensile strength 50,000 pounds per square inch, pitch of rivets 3⅛ inches, diameter of rivet holes $\frac{3}{4}$ of an inch?

$3\frac{1}{8} = 3.125$

$\frac{3}{4} = .750$

3.125) 2.37500 (.76=percentage.

21875

18750

18750

50.000 × .3125 = 15625.0000

15625.0000 × .76 = 11875.000000

$\frac{11875.000000}{27}$ = 439.81 pounds.

Answer.

BOILERS.

The circumference of a boiler shell 4 feet in diameter is 150 inches; hence, if the pressure usually carried is 50 pounds per square inch (many carry 100 to 150 pounds), there is constantly being exerted upon each inch in length of the shell a bursting pressure of 7,500 pounds, and if the boiler is 15 feet, or 180 inches long, the entire pressure, which is tending to rend the boiler asunder, amounts to the enormous total of 1,350,000 pounds, or, if the boiler is carrying 100 pounds per square inch, 2,700,000 pounds.

Boilers.

The grate surface of a boiler is proportional to the heating surface, usually being from $\frac{1}{25}$ to $\frac{1}{35}$ of the latter.

DIAMETER OF BOILER IN INCHES.	GRATE.	
	WIDTH.	LENGTH.
36	45	48
38	47	48
40	49	48
42	51	52
44	53	52
46	55	52
48	57	52
50	59	60
52	61	60
54	63	60
56	65	72
58	67	72
60	69	72

To Find the Diameter of Feed Pipe for a Boiler.

RULE: Find the diameter of pump plunger in inches and divide it by 20. Then multiply this quotient by the square root of the mean velocity in feet per minute of the plunger, and the product will be the required diameter of feed pipe.

In small pumps the velocity of flow through feed pipe should not exceed 400 feet per minute, and for large pumps 500 feet per minute.

Table Showing the Equivalent Evaporation from Feed at 100° into Steam of 70 lbs. Pressure for Various Other Pressures, and Temperatures of Feed-Water.

Temp. of the Feed-Water.	PRESSURE IN POUNDS PER SQUARE INCH ABOVE THE ATMOSPHERE.															
	0	10	20	30	40	45	50	60	70	75	80	90	100	120	140	160
32	1.033	1.04	1.046	1.05	1.053	1.055	1.056	1.059	1.061	1.063	1.064	1.066	1.068	1.071	1.074	1.076
40	1.025	1.033	1.039	1.043	1.046	1.048	1.05	1.052	1.054	1 055	1.056	1.058	1.06	1.064	1.067	1.069
50	1.016	1.024	1.03	1.034	1.037	1.039	1.04	1.043	1.045	1.046	1.047	1.049	1.051	1.055	1.057	1.06
60	1.008	1.015	1.02	1.025	1.028	1.031	1.031	1.034	1.036	1.037	1.038	1.04	1.042	1.046	1.048	1.051
70	.999	1.006	1.012	1.016	1.019	1.02	1.022	1.025	1.027	1.028	1.029	1.031	1.033	1.036	1.039	1.042
80	.989	.997	1.003	1.007	1.009	1.01	1.013	1.016	1.018	1.019	1.02	1.022	1.024	1.027	1.031	1.033
90	.98	.988	.993	.998	1.001	1.003	1.004	1.007	1.009	1.01	1.011	1.013	1.015	1.018	1.021	1.024
100	.971	.979	.984	.989	.992	.994	.995	.998	1.	1.001	1.002	1.004	1.006	1.009	1.012	1.015
110	.962	.97	.975	.979	.983	.985	.986	.989	.991	.992	.993	.995	.997	1.	1.003	1.006
120	.954	.961	.966	.97	.974	.976	.977	.98	982	.983	.984	.986	.988	.991	.994	.997
130	.944	.952	.957	.961	.965	.966	.968	.971	.973	.974	.975	.977	.979	.982	.985	.988
140	.935	.943	.948	.952	.956	.957	.959	.962	.964	.965	.966	.968	.97	.973	.976	.979
150	.926	.934	.939	.943	.947	.948	.950	.952	.955	.956	.957	.959	.961	.964	.967	.97
160	.917	.925	.93	.934	.938	.939	.941	.943	.946	.947	.948	.95	.952	.955	.958	.961
170	.908	.916	.921	.925	.929	.93	.932	.934	.937	.938	.939	.941	.943	.946	.949	.952
180	.9	.907	.912	.916	.919	.921	.923	.925	.928	.929	.93	.932	.934	.937	.94	.943
190	.89	.898	.903	.907	.91	.912	.913	.916	.919	.92	.921	.923	.924	.928	.931	.934
200	.881	.888	.894	.898	.901	.903	.904	.907	.909	.911	.912	.914	.915	.919	.922	.924
210	.872	.88	.885	.889	.892	.894	.895	.898	.9	.901	.902	.904	.905	.909	.913	.915
212	.87	.877	.883	.887	.892	.892	.893	.896	.898	.899	.901	.903	.904	.908	.911	.914

Suppose we have a boiler which evaporates 2,400 lbs. of water in one hour from feed at 70° into steam at 80 lbs. per square inch, what is the equivalent evaporation from 100° into steam of 70 lbs.?

Looking in the first column under "Temperature of the Feed" we find 70; following along the horizontal line from this point until we reach the line of pressures having 80 at the top we find 1,029; multiplying this by 2,400 we have 2,469.6 for the equivalent evaporation from 100° at 70 lbs., and the nominal horse-power of the boiler would be, by the Centennial Committee's Standard, $2{,}469.6 \div 30 = 82.3$ horse-power, and similarly in any other case.

Boiler Braces.

No more than 6,000 lbs. per square inch of section of brace is allowed by the laws of the United States. Required the strain on a sheet 40x20 inches; boiler pressure 60 lbs. per square inch. Number of braces, 6. Section of each brace, 1 square inch (or 1⅛″ full, round iron).

$$40 \times 20 = 800 \quad \text{square inches.}$$

$$800 \times 60 = 48000 \text{ lbs. pressure.}$$

$$\frac{48000}{6} = 8000 \text{ lbs. pressure,}$$

to each brace, or more than allowed by law.

"Porcupine" Boilers.

U. S. Board of Supervising Inspectors' rule for determining the steam pressure allowable upon the "Hazelton" or "Porcupine" type of boilers. Tube sheet to be of any thickness required.

Multiply the vertical distance between the horizontal rows of tubes in inches by one-half the diameter of shell of boiler in inches, which gives the area upon which the pressure is exerted to break a diagonal ligament; then find the sectional area of the ligament at its smallest part and multiply by one-sixth of the tensile strength of the material; this result divided by the area upon which the strain is exerted gives the working-pressure per square inch.

EXAMPLE:

Diameter of boiler, 30 inches. Plates, ⅝-inch thick. Tensile strength, 60,000 pounds. Width of ligament, 1.219 inches. Distance of vertical centers, 3.6875 inches.

$$1.219 \times .625 = .761875$$
$$.761875 \times 10{,}000 = 7{,}618.75$$
$$3.6875 \times 15 = 55.3125$$
$$\frac{7618.75}{55\ 3125} = 137.74 = \text{as the pressure allowed.}$$

Answer.

Table of the Strongest Form and Proportion of Riveted Joints.

THICKNESS OF PLATE.	DIAMETER OF RIVET.	LENGTH OF RIVET.	PITCH.	LAP.
$\frac{3}{16}$ inch.	⅜ inch.	0.85 inch.	1.14 inch.	1.14 inch.
¼ "	½ "	1.12 "	1.5 "	1.5 "
$\frac{5}{16}$ "	⅝ "	1.39 "	1.55 "	1.76 "
⅜ "	¾ "	1.68 "	1.87 "	2.1 "
½ "	¾ "	2.25 "	2.00 "	2.25 "
⅝ "	1 "	2.82 "	2.5 "	2.82 "
¾ "	1⅛ "	3.37 "	3.0 "	3 37 "

GRATE BARS.

For burning bituminous coal the air spaces between grate bars should be ¾ of an inch.

For wood, from ¾ to 1 inch.

For sawdust, from $\frac{3}{16}$ to ¼ inch.

The area of a chimney should be about 0.16 of the area of the fire grate.

All grates should have an inclination of an inch to the foot of grate bar, sloping downward from fire door to bridgewall.

The total amount of air opening through grate should not be less than one-quarter of total grate area.

The height of a chimney or stack is measured from the top of the furnace grate.

To Find the Consumption of Coal Per Horse Power Per Hour.

RULE: Divide the consumption of coal per day in pounds by the number of hours in the day. This will give the consumption of coal per hour. Next,

divide the number of pounds of coal consumed per hour by the *indicated* horse power of the engine. The result will be the number of pounds of coal per hour for each indicated horse power.

Very small engines will require from 8 to 10 pounds of coal per horse power per hour; ordinary non-condensing engines from 3 to 5 pounds, and large condensing engines from 1½ to 2 pounds per horse power per hour.

Incrustation and Scale.

The most common and important minerals in boiler scale are carbonate of lime, sulphate of lime, and carbonate of magnesia.

It is estimated that the presence of $\frac{1}{16}$ inch of scale causes a loss of 13 per cent. of fuel, ¼ inch 38 per cent., and ½ inch 60 per cent.

Boiler Scale Solvent.

Take 50 pounds of sal soda and 35 pounds of japonica. Put these ingredients in a 50 gallon barrel, half fill with water and bring to a boil. Then fill up with water and allow to settle. Use one quart per 10 hours for a 40-horse power boiler, pumped in with feed water.

Another.

Take 40 lbs. extract of hemlock, 4 lbs. soda ash, 5 lbs. brown sugar. Dissolve the above in 10 gallons of water. Dose: From 1 to 1½ gallons per week, according to size of boiler and thickness of scale.

WEIGHT AND DIMENSIONS OF I BEAMS.

3-INCH I BEAM, No. 13, LIGHT, 7 LBS. PER FOOT.

Depth, 3″. Width of Flanges, 2.32″. Thickness of Web, 0.19″. Maximum fiber strain = 12,000 lbs. per square inch.

4-INCH I BEAM, No. 12, LIGHT, 8 LBS. PER FOOT.

Depth, 4″. Width of Flanges, 2.48″. Thickness of Web, 0.23″. Maximum fiber strain = 12,000 lbs. per square inch.

4-INCH I BEAM, No. 12, HEAVY, 10 LBS. PER FOOT.

Depth, 4″. Width of Flanges, 2.63″. Thickness of Web, 0.38″. Maximum fiber strain = 12,000 lbs. per square inch.

5-INCH I BEAM, No. 11, LIGHT, 10 LBS. PER FOOT.

Depth, 5″. Width of Flanges, 2.73″. Thickness of Web, 0.225″. Maximum fiber strain = 12,000 lbs. per square inch.

5-INCH I BEAM, No. 11, HEAVY, 13 LBS. PER FOOT.

Depth, 5″. Width of Flanges, 2.91″. Thickness of Web, 0.405″. Maximum fiber strain = 12,000 lbs. per square inch.

6-INCH I BEAM, No. 10, LIGHT, 13½ LBS. PER FOOT.

Depth, 6″. Width of Flanges, 3.24″. Thickness of Web, 0.24″. Maximum fiber strain = 12,000 lbs. per square inch.

6-INCH I BEAM, No. 10, HEAVY, 18 LBS. PER FOOT.

Depth, 6″. Width of Flanges, 3.46″. Thickness of Web, 0.46″. Maximum fiber strain = 12,000 lbs. per square inch.

7-INCH I BEAM, No. 9, LIGHT, 18 LBS. PER FOOT.

Depth, 7″. Width of Flanges, 3.61″. Thickness of Web, 0.23″. Maximum fiber strain = 12,000 lbs. per square inch.

7-INCH I BEAM, No. 8, HEAVY, 25 LBS. PER FOOT.

Depth, 7″. Width of Flanges, 3.91″ Thickness of Web, 0.53″. Maximum fiber strain = 12,000 lbs. per square inch.

8-INCH I BEAM, No. 8, LIGHT, 22 LBS. PER FOOT.

Depth, 8″. Width of Flanges, 3.81″. Thickness of Web, 0.31″. Maximum fiber strain = 12,000 lbs. per square inch.

8-INCH I BEAM, No. 8, HEAVY, 35 LBS. PER FOOT.

Depth, 8″. Width of Flanges, 4.29. Thickness of Web, 0 79″. Maximum of fiber strain = 12,000 lbs. per square inch.

9-INCH I BEAM, No. 6, LIGHT, 23½ LBS. PER FOOT.

Depth, 9″. Width of Flanges, 4.01″. Thickness of Web, 0.26″. Maximum fiber strain = 12,000 lbs. per square inch.

9-INCH I BEAM, No. 6, HEAVY, 33 LBS. PER FOOT.

Depth, 9″. Width of Flanges, 4.33″. Thickness of Web, 0 58.″ Maximum fiber strain = 12,000 lbs. per square inch.

10-INCH I BEAM, No. 5, LIGHT, 30 LBS. PER FOOT.

Depth, 10″. Width of Flanges, 4.32″. Thickness of Web. 0·32″ Maximum fiber strain = 12,000 lbs. per square inch.

10-INCH I BEAM, No. 5, HEAVY, 45 LBS. PER FOOT.

Depth, 10″. Width of Flanges, 4.77″. Thickness of Web, 0 77.″ Maximum fiber strain = 12,000 lbs. per square inch.

10½-INCH I BEAM, No. 4, LIGHT, 31½ LBS. PER FOOT.

Depth, 10½″. Width of Flanges, 4.54″. Thickness of Web, 0.41″. Maximum fiber strain = 12,000 lbs. per square inch.

10½-INCH I BEAM, No. 4, HEAVY, 45 LBS. PER FOOT.

Depth, 10½″. Width of Flanges, 4.92″. Thickness of Web, 0.79″. Maximum fiber strain = 12,000 lbs. per square inch.

12-INCH I BEAM, No. 3, LIGHT, 42 LBS. PER FOOT.

Depth, 12″. Width of Flanges, 4.64″. Tickness of Web, 0.51″. Maximum fiber strain = 12,000 lbs. per square inch.

12-INCH I BEAM, No. 3, HEAVY, 60 LBS. PER FOOT.

Depth, 12″. Width of Flanges, 5.09″. Thickness of Web, 0.96″. Maximum fiber strain = 12,000 lbs. per square inch.

15-INCH I BEAM, No. 1, LIGHT, 50 LBS. PER FOOT.

Depth, 15″. Width of Flanges, 5.03″. Thickness of Web, 0.47″. Maximum fiber strain = 12,000 lbs. per square inch.

15-INCH I BEAM, No. 1, HEAVY, 65 LBS. PER FOOT.

Depth, 15″. Width of Flanges, 5.33″. Thickness of Web, 0.77″. Maximum fiber strain = 12,000 lbs. per square inch.

15-INCH I BEAM, No. 2, LIGHT, 67 LBS. PER FOOT.

Depth, 15″. Width of Flanges, 5.55″. Thickness of Web, 0.67″. Maximum fiber strain = 12,000 lbs. per square inch.

15-INCH I BEAM, No. 2, HEAVY, 80 LBS. PER FOOT.

Depth, 15″. Width of Flanges, 5.81″. Thickness of Web, 0.93″. Maximum fiber strain = 12,000 lbs. per square inch.

To Find the Safe Load which a Horizontal Cast Iron Beam will Bear, the Beam being Fixed at one End, and the Load Suspended from the other.

RULE: Multiply the square of the depth of beam in inches by the breadth in inches, and this product by the constant number 350, and divide the result by the length of projecting beam in feet. Divide the quotient by 4, and subtract one-half the weight of beam.

For wrought iron beams use the constant number 375 and proceed as above.

To Find the Safe Load for a Horizontal Cast Iron Beam Fixed at one End, and the Load Uniformly Distributed.

RULE: Multiply the square of the depth of beam in inches by the breadth in inches and the product by the constant number 350, and divide the result by the length of projecting beam in feet. Divide this result by 2, and from the quotient subtract the whole weight of beam.

For wrought iron beams use the constant number 375, and proceed as above.

To Find the Safe Load which a Cast Iron Beam of Uniform Rectangular Cross Section, Supported at both Ends, can Bear in the Center.

RULE: Multiply the square of the depth of beam in inches by the breadth in inches, and this product by the constant number 350. Then divide the result by the distance between the supports in feet. For wrought iron beams proceed as above, using the constant number 375 instead of 350. The above rule applies to loads at rest.

To Find the Safe Load for a Horizontal Cast Iron Beam, Loaded Uniformly Throughout, and Supported at Both Ends.

RULE: Multiply the square of the depth of beam in inches by the breadth in inches, and this product by the constant number 350, and divide the re-

sult by the distance between supports in feet. Multiply this result by 2 and deduct the whole weight of the beam.

For wrought iron beams use the constant number 375, and proceed as above.

WOODEN BEAMS.

Safe load, uniformly distributed, for rectangular white or yellow pine beams one inch thick, allowing 1,200 lbs. per square inch fiber strain.

To obtain the safe load for any thickness, multiply the safe load given in table by the thickness of beam.

To obtain the required thickness for any load, divide by the safe load for 1 inch, given in table.

Span in Ft.	DEPTH OF BEAM.										
	6″	7″	8″	9″	10″	11″	12″	13″	14″	15″	16″
Feet.	Lbs.	Lbs.	Lbs.	Lbs.	Lbs.	Lbs.	Lbs.	Lbs.	Lbs.	Lbs.	Lbs.
5	960	1310	1710	2160	2670	3230	3840	4510	5230	6000	6830
6	800	1090	1420	1800	2220	2690	3200	3760	4360	5000	5690
7	690	930	1220	1540	1900	2300	2740	3220	3730	4290	4880
8	600	820	1070	1350	1670	2020	2400	2820	3270	3750	4270
9	530	730	950	1200	1480	1790	2130	2500	2900	3330	3790
10	480	650	850	1080	1330	1610	1920	2250	2610	3000	3410
11	440	590	780	980	1210	1470	1750	2050	2380	2730	3100
12	400	540	710	900	1110	1340	1600	1880	2180	2500	2840
13	370	500	660	830	1030	1240	1480	1730	2010	2310	2630
14	340	470	610	770	950	1150	1379	1610	1870	2140	2440
15	320	440	570	720	890	1080	1280	1500	1740	2000	2280
16	300	410	530	680	830	1010	1200	1410	1630	1880	2130
17	280	380	500	640	780	950	1130	1330	1540	1760	2010
18	270	360	470	600	740	900	1070	1250	1450	1670	1900
19	250	340	450	570	700	850	1010	1190	1380	1580	1800
20	240	330	430	540	670	810	960	1130	1310	1500	1710
21	230	310	410	510	630	770	910	1070	1240	1430	1630
22	220	300	390	490	610	730	870	1020	1190	1360	1550
23	210	280	370	470	580	700	830	980	1140	1300	1480
24	200	270	360	450	560	670	800	940	1090	1250	1420
25	190	260	340	430	530	650	770	900	1050	1200	1370
26	180	250	330	420	510	620	740	870	1010	1150	1310
27	180	240	320	400	500	600	710	830	970	1110	1260
28	170	230	300	390	480	580	690	800	930	1070	1220
29	170	230	290	370	460	560	660	780	900	1030	1180

The strength of beams is in direct proportion to their thickness, inversely as their length, and as the square of their depth, thus: A joist 4 inches thick is twice as strong as a 2 inch joist; if 12 feet in length, it has double the strength of one of 24 feet, while doubling the depth, as from 6 to 12 inches, increases the strength four fold. In these comparisons all other elements of strength are assumed to be equal.

Safe Uniformly Distributed Load in Tons of 2,000 Lbs. for Rectangular White or Yellow Pine Beams 1 inch in Thickness.

SPAN IN FT.	DEPTH IN INCHES.														
	1	2	3	4	5	6	7	8	9	10	11	12	13	14	15
1	0.069	0.278	0.625	1.111	1.736	2.500	3.403	4.444	5.625	6.944	8.403	10.000	11.737	13.611	15.625
2	0.035	0.139	0.312	0.556	0.868	1.250	1.701	2.222	2.812	3.472	4.201	5.000	5.868	6.806	7.812
3	0.023	0.093	0.208	0.370	0.579	0.833	1.134	1.481	1.875	2.315	2.801	3.333	3.912	4.537	5.208
4	0.017	0.069	0.156	0.278	0.434	0.625	0.851	1.111	1.406	1.738	2.101	2.500	2.934	3.403	3.906
5	0.014	0.056	0.125	0.222	0.347	0.500	0.681	0.888	1.125	1.389	1.681	2.000	2.347	2.722	3.125
6	0.012	0.046	0.104	0.185	0.289	0.417	0.567	0.741	0.938	1.157	1.400	1.667	1.956	2.269	2.604
7	0.010	0.040	0.089	0.159	0.248	0.357	0.486	0.635	0.804	0.992	1.200	1.429	1.677	1.944	2.232
8	0.009	0.035	0.078	0.139	0.217	0.312	0.425	0.555	0.703	0.868	1.050	1.250	1.467	1.701	1.953
9	0.008	0.031	0.069	0.123	0.193	0.278	0.378	0.494	0.625	0.772	0.934	1.111	1.304	1.512	1.736
10	0.007	0.028	0.062	0.111	0.174	0.250	0.340	0.444	0.562	0.694	0.840	1.000	1.174	1.461	1.562
11	0.006	0.025	0.057	0.101	0.158	0.227	0.309	0.404	0.511	0.631	0.764	0.909	1.067	1.237	1.420
12	0.006	0.023	0.052	0.093	0.145	0.208	0.284	0.370	0.469	0.579	0.700	0.833	0.978	1.134	1.302
13	0.005	0.021	0.048	0.085	0.134	0.192	0.261	0.342	0.433	0.534	0.646	0.769	0.903	1.047	1.202
14	0.005	0.020	0.045	0.079	0.124	0.179	0.243	0.317	0.402	0.496	0.600	0.714	0.838	0.972	1.116
15	0.005	0.019	0.042	0.074	0.116	0.167	0.227	0.296	0.375	0.463	0.560	0.667	0.782	0.907	1.042
16	0.004	0.017	0.039	0.069	0.109	0.156	0.213	0.278	0.352	0.434	0.525	0.625	0.734	0.851	0.977
17	0.004	0.016	0.037	0.065	0.102	0.147	0.200	0.261	0.331	0.408	0.491	0.588	0.690	0.801	0.919
18	0.004	0.015	0.035	0.062	0.096	0.139	0.189	0.247	0.312	0.386	0.467	0.556	0.652	0.756	0.868
19	0.004	0.015	0.033	0.058	0.091	0.132	0.179	0.234	0.296	0.365	0.442	0.526	0.617	0.716	0.822
20	0.003	0.014	0.031	0.056	0.087	0.125	0.170	0.222	0.281	0.347	0.420	0.500	0.587	0.681	0.781
21	.....	0.013	0.030	0.053	0.083	0.119	0.162	0.212	0.268	0.331	0.400	0.476	0.559	0.648	0.744
22	.....	0.013	0.028	0.051	0.079	0.114	0.155	0.202	0.256	0.311	0.382	0.455	0.533	0.619	0.710
23	.....	.....	0.027	0.048	0.075	0.109	0.148	0.193	0.245	0.302	0.365	0.435	0.510	0.592	0.679
24	....	.....	.....	0.046	0.072	0.104	0.142	0.185	0.234	0.289	0.350	0.417	0.489	0.567	0.651
25	.....	.....	....	.....	0.069	0.100	0.136	0.178	0.225	0.278	0.336	0.400	0.469	0.544	0.625
26	.....	....	....	.....	.....	0.096	0.131	0.171	0.216	0.267	0.323	0.385	0.451	0.524	0.601
27	.....	....	....	.....	.....	.....	0.126	0.165	0.208	0.257	0.311	0.370	0.435	0.504	0.579
28	.....	.....	.....	.....	.....	.....	....	0.159	0.201	0.248	0.300	0.357	0 419	0.486	0.558
29	....	....	.....	....	....	.....	.....	.....	0.196	0.239	0.290	0.345	0.405	0.469	0.539
30	....	.....	.....	.....	....	....	....	....	....	0.231	0.280	0.333	0 391	0.454	0.521

EXAMPLE: What is the safe load for a beam having 30 feet span, and having a depth of 10 inches, and 8″ thick?

$2000 \times 0.231 = 462$ lbs. the safe load for 1 inch thick.

$462 \times 8 = 3{,}696$ lbs. for 8″ thick. Ans.

Table Showing Weight in Pounds of Sheet and Bar Brass.

Thickness or Diameter in Inches.	Sheets per Square Foot.	Square Bars, 1 Foot Long.	Round Bars, 1 Foot Long.	Thickness or Diameter in inches.	Sheets per Square Foot.	Square Bars, 1 Foot Long.	Round Bars, 1 Foot Long.
1/16	2.7	.015	.011	1 1/16	48.69	4.08	3.20
1/8	5.41	.055	.045	1/8	49.95	4.55	3.57
3/16	8.12	.125	.1	3/16	51.4	5.08	3.97
1/4	10.76	.225	.175	1/4	54.18	5.65	4.41
5/16	13.48	.350	.275	5/16	56.85	6.22	4.86
3/8	16.25	.51	.395	3/8	59.55	6.81	5.35
7/16	19.	.69	.54	7/16	62.25	7.45	5.85
1/2	21.65	.905	.71	1/2	65.	8.13	6.37
9/16	24.3	1.15	.9	9/16	67.75	8.83	6.92
5/8	27.12	1.4	1.1	5/8	70.35	9.55	7.48
11/16	29.77	1.72	1.35	11/16	73.	10.27	8.05
3/4	32.46	2.05	1.66	3/4	75.86	11.	8.65
13/16	35.18	2.4	1.85	13/16	78.55	11.82	9.29
7/8	37.85	2.75	2.15	7/8	81.25	12.68	9.95
15/16	40.55	3.15	2.48	15/16	84.	13.5	10.58
1	43.29	3.65	2.85	2	86.75	14.35	11.25

Specific gravity, 8.218. Weight, per cubic foot, 513.6 lbs.

To determine the presence of *lead* in tin vessels. Touch the metal with nitric acid, and then heat until the acid evaporates. If there be lead in the metal stannic acid and nitrate of lead remain. Iodide of potassium is then applied, forming yellow iodide of lead, while the stannic acid is white. The yellow stain indicates lead; the white, tin.

Soldering liquid for brass. Into hydrochloric acid, place as much scrap-zinc as it will dissolve, still leaving a sponge of zinc.

To solder cast or wrought iron, add a little sal-ammoniac.

German silver. Nickel, 3 parts; zinc, 3½ parts, and copper, 8 parts.

Weight of 100 Bolts With Square Heads and Nuts.

LENGTH UNDER HEAD.	DIAMETER OF BOLTS.						
	¼ in.	⅜ in.	½ in.	⅝ in.	¾ in.	⅞ in.	1 in.
Inches.	Lbs.	Lbs.	Lbs.	Lbs.	Lbs.	Lbs.	Lbs.
1	3½	9	20	32	.....	.....	.....
1¼	3⅞	9⅞	21	34½	.....	.....	.....
1½	4¼	10¾	22	37	.....	.....	.....
1¾	4⅝	11⅝	23	39½	.....	.....	.....
2	5	12½	24	42	70	130	180
2¼	5⅜	13⅛	25½	44½	73½	132½	185
2½	5¾	14⅜	27	47	77	135	190
2¾	6⅛	15½	28½	49½	80½	137½	195
3	6½	16¼	30	52	84	140	200
3½	7⅛	18⅛	33	56½	90	148	210
4	7¾	20	36	61	96	156	220
4½	8⅜	21⅝	39	65½	101½	164	230
5	9	23¼	42	70	107	172	240
5½	9¾	24⅞	45	74	112½	180	251
6	10⅜	26½	48	78	118	188	262
7	11¾	29½	54	86	130	204	284
8	13⅛	33	60	94	143	220	306
9	14½	36	66	102	156	236	328
10	16	40	72	110	170	252	350
11	17¼	43	78	118	185	268	372
12	18⅝	46	84	127	200	284	393

Weight of 100 Bolts With Hexagon Heads and Nuts.

LENGTH UNDER HEAD.	DIAMETER OF BOLTS.						
	¼ in.	⅜ in.	½ in.	⅝ in.	¾ in.	⅞ in.	1 in.
Inches.	Lbs.	Lbs.	Lbs.	Lbs.	Lbs	Lbs.	Lbs.
1	3⅛	7¾	16⅜	26¾	.....	.....	.....
1¼	3½	8⅝	17⅜	29¼	.....	.....	.....
1½	3⅞	9½	18⅜	31¾	.....	.....	.....
1¾	4¼	10⅜	19⅜	34¼	.....	.....	.....
2	4⅝	11¼	20⅝	36¾	58	115	159
2¼	5	12¼	21⅞	39¼	61½	117½	164
2½	5⅜	13⅛	23⅜	41¾	65	120	169
2¾	5¾	14	24⅞	44¼	68½	122½	174
3	6⅛	15	26⅜	46¾	72	125	179
3½	6¾	16⅞	29⅜	51¼	78	133	189
4	7⅜	18⅞	32⅜	55¾	84	141	199
4½	8	20⅜	35⅜	60¼	89½	149	209
5	8⅝	22	38⅜	64¾	95	157	219
5½	9⅜	23⅝	41⅜	68¾	100½	165	230
6	10	25¼	44⅜	72¾	106	173	241
7	11⅜	28¼	50⅜	80¾	118	189	263
8	12¾	31¾	56⅜	88¾	131	205	285
9	14⅛	34¾	62⅜	96¾	144	221	297
10	15⅝	38¾	68⅜	104¾	158	237	329
11	16⅞	41⅜	74⅜	112⅞	173	253	351
12	18¼	44¾	80⅜	121½	188	269	372

Weight of Rivets and Round Headed Bolts Without Nuts, Per 100.

LENGTH FROM UNDER HEAD. ONE CUBIC FOOT WEIGHING 480 LBS.

LENGTH INCHES.	3/8″ DIAM.	1/2″ DIAM.	5/8″ DIAM.	3/4″ DIAM.	7/8″ DIAM.	1″ DIAM.	1 1/8″ DIAM.	1 1/4″ DIAM.
1 1/4	5.4	12.6	21.5	28.7	43.1	65.3	91.5	123.
1 1/2	6.2	13.9	23.7	31.8	47.3	70.7	98.4	133.
1 3/4	6.9	15.3	25.8	34.9	51.4	76.2	105.	142.
2	7.7	16.6	27.9	37.9	55.6	81.6	112.	150.
2 1/4	8.5	18.0	30.0	41.0	59.8	87.1	119.	159.
2 1/2	9.2	19.4	32.2	44.1	63.0	92.5	126.	167.
2 3/4	10.0	20.7	34.3	47.1	68.1	98.0	133.	176.
3	10.8	22.1	36.4	50.2	72.3	103.	140.	184.
3 1/4	11.5	23.5	38.6	53.3	76.5	109.	147.	193.
3 1/2	12.3	24.8	40.7	56.4	80.7	114.	154.	201.
3 3/4	13.1	26.2	42.8	59.4	84.8	120.	161.	210.
4	13.8	27.5	45.0	62.5	89.0	125.	167.	218.
4 1/4	14.6	28.9	47.1	65.6	93.2	131.	174.	227.
4 1/2	15.4	30.3	49.2	68.6	97.4	136.	181.	236.
4 3/4	16.2	31.6	51.4	71.7	102.	142.	188.	244.
5	16.9	33.0	53.5	74.8	106.	147.	195.	253.
5 1/4	17.7	34.4	55.6	77.8	110.	153.	202.	261.
5 1/2	18.4	35.7	57.7	80.9	114.	158.	209.	270.
5 3/4	19.2	37.1	59.9	84.0	118.	163.	216.	278.
6	20.0	38.5	62.0	87.0	122.	169.	223.	287.
6 1/2	21.5	41.2	66.3	93.2	131.	180.	236.	304.
7	23.0	43.9	70.5	99.3	139.	191.	250.	321.
7 1/2	24.6	46.6	74.8	106.	147.	202.	264.	338.
8	26.1	49.4	79.0	112.	156.	213.	278.	355.
8 1/2	27.6	52.1	83.3	118.	164.	223.	292.	372.
9	29.2	54.8	87.6	124.	173.	234.	306.	389.
9 1/2	30.7	57.6	91.8	130.	181.	245.	319.	406.
10	32.2	60.3	96.1	136.	189.	256.	333.	423.
10 1/2	33.8	63.0	101.	142.	198.	267.	347.	440.
11	35.3	65.7	105.	148.	206.	278.	361.	457.
11 1/2	36.8	68.5	109.	155.	214.	289.	375.	474.
12	38.4	71.2	113.	161.	223.	300.	388.	491.
Heads.	1.8	5.7	10.9	13.4	22.2	38.0	57.0	82.0

Weight and Strength of Iron Bolts.

ENDS ENLARGED OR UPSET.			ENDS NOT ENLARGED.		ENDS ENLARGED OR UPSET.			ENDS NOT ENLARGED.	
DIAMETER OF SHANK.	WEIGHT PER FOOT RUN.	BREAKING STRAIN.	DIAMETER OF SHANK.	WEIGHT PER FOOT RUN.	DIAMETER OF SHANK.	WEIGHT PER FOOT RUN.	BREAKING STRAIN.	DIAMETER OF SHANK.	WEIGHT PER FOOT RUN.
Ins.	Pounds.	Tons. 2240 lbs.	Ins.	Lbs.	Ins.	Lbs.	Tons 2240 lbs.	Ins.	Lbs.
1/8	.0414	.245	.....	.....	1 3/4	8.10	45.7	2.14	12.0
3/16	.093	.553	.....	.....	1 13/16	8.69	49.0	2.22	12.9
1/4	.165	.983	.35	.321	1 7/8	9.30	52.5	2.30	13.8
5/16	.258	1.53	.43	.452	1 15/16	9.93	56.0	2.38	14.7
3/8	.372	2.21	.50	.654	2	10.6	59.7	2.45	15.7
7/16	.506	3.00	.58	.897	2 1/8	12.0	63.8	2.59	17.5
1/2	.661	3.93	.66	1.14	2 1/4	13.4	71.6	2.73	19.5
9/16	.837	4.97	.73	1.41	2 3/8	14.9	79.7	2.88	21.6
5/8	1.03	6.14	.80	1.67	2 1/2	16.5	88.4	3.02	23.9
11/16	1.25	7.42	.88	2.03	2 5/8	18.2	97.4	3.16	26.1
3/4	1.49	8.83	.96	2.41	2 3/4	20.0	106.9	3.30	28.5
13/16	1.75	10.4	1.04	2.81	2 7/8	21.9	116.8	3.45	31.1
7/8	2.03	12.0	1.12	3.26	3	23.8	127.2	3.60	33.9
15/16	2.33	13.8	1.20	3.77	3 1/4	27.9	141.0	3.86	39.1
1	2.65	15.7	1.27	4.27	3 1/2	32.4	163.6	4.12	44.4
1 1/16	2.99	16.8	1.35	4.77	3 3/4	37.2	187.7	4.41	51.0
1 1/8	3.35	18.9	1.42	5.28	4	42.3	213.6	4.70	57.8
1 3/16	3.73	21.1	1.49	5.81	4 1/4	47.8	227.0	4.98	65.2
1 1/4	4.13	23.3	1.55	6.39	4 1/2	53.6	254.5	5.25	72.9
1 5/16	4.56	25.7	1.64	7.04	4 3/4	59.7	283.5	5.53	80.5
1 3/8	5.00	28.2	1.72	7.74	5	66.1	314.2	5.80	88.1
1 7/16	5.47	30.8	1.80	8.48	5 1/4	72.9	324.7	6.08	97.0
1 1/2	5.95	33.6	1.87	9.20	5 1/2	80.0	356.4	6.36	106.
1 9/16	6.46	36.4	1.94	9.88	5 3/4	87.5	389.5	6.63	116.
1 5/8	6.99	39.4	2.00	10.6	6	95.2	424.1	6.90	126.
1 11/16	7.53	42.5	2.07	11.3	.....	.....	.....	.....	.....

For *square bars* increase the breaking strains ¼ part.

A long upset rod is no stronger than one not upset, against *slowly applied* loads or strains. Therefore in such cases the column of greatest diameter in the table should be used.

A System of Bolts and Nuts, as Recommended by the Franklin Institute, of Philadelphia, December 15, 1364.

DIAMETER OF BOLT.	NUMBER OF THREADS PER INCH.	DIAMETER OF HOLE IN NUT.	DIAMETER OF BOLT.	NUMBER OF THREADS PER INCH.	DIAMETER OF HOLE IN NUT.
¼	20	.185	2	4½	1.712
5/16	18	.240	2¼	4½	1.962
⅜	16	.294	2½	4	2.175
7/16	14	.344	2¾	4	2.425
½	13	.400	3	3½	2.628
9/16	12	.454	3¼	3½	2.878
⅝	11	.507	3½	3¼	3 100
¾	10	.620	3¾	3	3.317
⅞	9	.731	4	3	3.566
1	8	.837	4¼	2⅞	3.825
1⅛	7	.940	4½	2¾	4.027
1¼	7	1.065	4¾	2⅝	4.255
1⅜	6	1.160	5	2½	4.480
1½	6	1.284	5¼	2½	4.730
1⅝	5½	1.389	5½	2⅜	5.053
1¾	5	1.490	5¾	2⅜	5.203
1⅞	5	1.615	6	2¼	5.423

Table of Horse Power which May be Transmitted by Open Single Belts to Pulleys Running 100 Revolutions per Minute. The Diameters of the Driving and Driven Pulleys Being Equal.

THE HORSE POWER OF DOUBLE BELTS IS 10.7 OF THAT GIVEN IN THE TABLE.

DIAM. PULLEY.	WIDTH OF BELT IN INCHES.							
	2	2½	3	3½	4	4½	5	6
INCHES.	H. P.	H. P.	H. P.	H. P.	H. P.	H. P.	H. P.	H. P.
6	.44	.54	.65	.76	.87	.98	1.09	1.31
6½	.47	.59	.71	.83	.95	1.07	1.19	1.42
7	.51	.64	.76	.89	1.01	1.14	1.27	1.53
7½	.55	.68	.82	.95	1.09	1.23	1.36	1.64
8	.58	.73	.87	1.02	1.16	1.31	1.45	1.75
8½	.62	.77	.93	1.08	1.24	1.39	1.55	1.86
9	.65	.82	.98	1.15	1.31	1.48	1.64	1.97
9½	.69	.86	1.04	1.21	1.39	1.56	1.74	2.08
10	.73	.91	1.09	1.27	1.45	1.63	1.81	2.18
11	.8	1.	1.2	1.4	1.6	1.8	2.	2.4
12	.87	1.09	1.31	1.53	1.75	1.97	2.18	2.62
13	.95	1.18	1.42	1.65	1.89	2.12	2.36	2.83
14	1.02	1.27	1.52	1.77	2.02	2.27	2.53	3.05
15	1.09	1.36	1.64	1.91	2.19	2.46	2.73	3.29
16	1.16	1.45	1.74	2.03	2.32	2.61	2.91	3.48
17	1.24	1.55	1.85	2.16	2.47	2.78	3.09	3.70
18	1.31	1.64	1.96	2.29	2.62	2.95	3.27	3.92
19	1.39	1.73	2.07	2.42	2.76	3.11	3.45	4.14
20	1.45	1.82	2.18	2.55	2.91	3.27	3.64	4.36
21	1.52	1.91	2.29	2.67	3.05	3.44	3.82	4.58
22	1.66	2.	2.4	2.8	3.2	3.6	4.	4.8
23	1.67	2.09	2.51	2.93	3.35	3.75	4.18	5.02

DIAM. PULLEY.	WIDTH OF BELT IN INCHES.							
	4	5	6	8	10	12	14	16
INCHES.	H. P.	H. P.	H. P.	H. P.	H. P.	H. P.	H. P.	H. P.
24	3.5	4.4	5.2	7.	8.7	10.5	12.2	14.
25	3.6	4.5	5.5	7.3	9.1	10.9	12.7	14.5
26	3.8	4.7	5.7	7.6	9.5	11.3	13.2	15.1
27	3.9	4.9	5.9	7.8	9.8	11.8	13.7	15.6
28	4.1	5.1	6.1	8.1	10.2	12.2	14.3	16.3
29	4.2	5.3	6.3	8.4	10.5	12.6	14.8	16.9
30	4.4	5.4	6.6	8.7	10.9	13.1	15.3	17.4
31	4.5	5.6	6.8	9.	11.3	13.5	15.8	18.
32	4.7	5.8	7.	9.3	11.6	14.	16.3	18.6
33	4.8	6.	7.2	9.6	12.	14.4	16.8	19.2
34	4.9	6 2	7.4	9.9	12.4	14.8	17.3	19.8
35	5.1	6.4	7.6	10.2	12.7	15.3	17.9	20.4
36	5.2	6.5	7.8	10.5	13.1	15.7	18.3	20.9
37	5.4	6.7	8.1	10.8	13.5	16.2	18.9	21.5
38	5.5	6.9	8.3	11.	13.8	16.6	19.3	22.1
39	5.7	7.1	8.5	11.3	14.2	17.	19.9	22.7
40	5.8	7.3	8.7	11.6	14.6	17.5	20.4	23.3
42	6.1	7.6	9.2	12.2	15.3	18.2	21.4	24.3
44	6.4	8.	9.6	12.8	16	19.2	22.4	25.6
46	6.7	8.4	10.	13.4	16.	20.1	23.4	26.8
48	7.	8.8	10.4	14.	17.4	21.	24.4	28.
50	7.2	9.	10.9	14.6	18.2	21.8	25.4	29.
54	7.8	9.8	11.8	15.6	19.6	23.6	26.4	31.2
60	8.8	10.8	13.1	17.4	21.8	26.2	30.6	34.8

DIAM. PULLEY.	WIDTH OF BELT IN INCHES.							
	18	20	22	24	26	28	30	32
INCHES.	H. P.	H. P.	H. P.	H. P.	H. P.	H. P.	H. P.	H. P.
24	16	17	19	21	23	24	26	28
30	19	22	24	26	28	31	33	35
36	24	26	29	31	34	37	39	42
38	25	28	30	33	36	39	41	44
40	26	29	32	35	38	41	44	47
42	28	31	34	36	40	43	46	49
44	29	32	35	38	42	45	48	51
48	31	35	38	42	45	49	52	56
50	33	36	40	44	47	51	54	58
54	35	39	43	47	50	53	58	62
60	39	44	48	52	57	61	65	70
66	43	48	53	58	62	67	72	77
72	47	52	58	63	68	73	78	84
78	50	57	62	68	74	80	85	91
84	55	61	67	73	79	86	91	97
96	63	70	76	84	90	98	104	112
120	78	88	96	104	114	122	130	140
144	94	104	116	126	136	146	156	168

DIAM. OF PULLEY IN INCHES.	REVOLUTIONS OF THE PULLEY PER MINUTE.											
	50	60	70	80	90	100	125	150	175	200	250	300
	HORSE POWER TRANSMITTED BY A SINGLE BELT ONE INCH WIDE.											
12	.19	.23	.27	.31	.35	.39	.49	.59	.69	.79	.98	1.18
14	.23	.27	.32	.36	.41	.46	.57	.68	.80	.92	1.14	1.37
16	.26	.31	.37	.42	.47	.53	.65	.79	.92	1.04	1.30	1.57
18	.29	.35	.41	.47	.53	.59	.74	.88	1.03	1.18	1.47	1.76
20	.33	.39	.46	.52	.59	.65	.82	.98	1.14	1.30	1.63	1.96
24	.39	.47	.55	.63	.71	.79	.97	1.18	1.38	1.57	1.98	2.35
28	.46	.55	.64	.73	.82	.91	1.15	1.37	1.60	1.83	2.28	2.75
32	.52	.63	.73	.84	.94	1.05	1.31	1.57	1.83	2.10	2.62	3.15
36	.59	.71	.82	.94	1.06	1.18	1.47	1.76	2.06	2.36	2.95	3.54
40	.65	.79	.92	1.05	1.18	1.31	1.63	1.96	2.30	2.62	3.28	3.94
44	.72	.86	1.00	1.15	1.30	1.44	1.80	2.16	2.52	2.88	3.60	4.30
48	.78	.94	1.10	1.26	1.42	1.57	1.96	2.35	2.75	3.15	3.94	4.72
54	.88	1.06	1.24	1.42	1.59	1.77	2.21	2.66	3.10	3.54	4.43	5.30
60	.98	1.18	1.37	1.56	1.76	1.96	2.45	2.94	3.43	3.93	4.90	5.89
66	1.08	1.30	1.51	1.73	1.94	2.16	2.70	3.24	3.78	4.30	5.40	6.49
72	1.18	1.41	1.64	1.88	2.12	2.35	2.95	3.53	4.12	4.70	5.88	7.05
78	1.28	1.53	1.78	2.04	2.30	2.56	3.20	3.83	4.48	5.11	6.40	7.68
84	1.38	1.65	1.92	2.20	2.48	2.75	3.44	4.13	4.81	5.51	6.88	8.25
90	1.47	1.77	2.07	2.36	2.66	2.95	3.68	4.42	5.17	5.90	7.38	8.85
96	1.58	1.89	2.21	2.53	2.84	3.15	3.93	4.73	5.52	6.32	7.90	9.45

TO FIND THE WEIGHT OF A HOLLOW CAST IRON BALL.

Multiply the difference of the cube of the outer and inner diameter in inches by .1365. The result will be the weight in pounds avoirdupois approximately.

Common lead glass melted makes a good bath in which to heat small articles that are to be hardened.

The momentum of a moving body is its mass multiplied into its velocity, while the *vis viva* is one-half the mass multiplied into the square of the velocity.

Momentum is a mere term employed in certain mathematical processes with no corresponding quantity in nature, but *vis viva*, or "live strength," is the actual force exerted by any moving body—the sum of the resistance required to bring a body to a state of rest.

Do not place a tightening pulley on the load line or pulling side of a belt. Place it so that it will bear against the slack side.

Table of Horse Power which May be Transmitted by Open Single Belts in Pulleys Running 100 Revolutions per Minute. The Diameters of the Driving and Driven Pulleys Being Equal.

The Horse Power of Double Belts is 10-7 of that given in the Table.

Diam. of Pulley.	WIDTH OF BELT IN INCHES.								Diam. of Pulley.	WIDTH OF BELT IN INCHES.							
	2	2½	3	3½	4	4½	5	6		4	5	6	8	10	12	14	16
Inches.	H. P.	H. P.	H. P.	H. P.	H. P.	H. P.	H. P.	H. P.	Inches.	H. P.	H. P.	H. P.	H. P.	H. P.	H. P.	H. P.	H. P.
6	.44	.54	.65	.76	.87	.98	1.09	1.31	24	3.5	4.4	5.2	7.	8.7	10.5	12.2	14.
6½	.47	.59	.71	.83	.95	1.07	1.19	1.42	25	3.6	4.5	5.5	7.3	9.1	10.9	12.7	14.5
7	.51	.64	.76	.89	1.01	1.14	1.27	1.53	26	3.8	4.7	5.7	7.6	9.5	11.3	13.2	15.1
7½	.55	.68	.82	.95	1.09	1.23	1.36	1.64	27	3.9	4.9	5.9	7.8	9.8	11.8	13.7	15.6
8	.58	.73	.87	1.02	1.16	1.31	1.45	1.75	28	4.1	5.1	6.1	8.1	10.2	12.2	14.3	16.3
8½	.62	.77	.93	1.08	1.24	1.39	1.55	1.86	29	4.2	5.3	6.3	8.4	10.5	12.6	14.8	16.9
9	.65	.82	.98	1.15	1.31	1.48	1.64	1.97	30	4.4	5.4	6.6	8.7	10.9	13.1	15.3	17.4
9½	.69	.86	1.04	1.21	1.39	1.56	1.74	2.08	31	4.5	5.6	6.8	9.	11.3	13.5	15.8	18.
10	.73	.91	1.09	1.27	1.45	1.63	1.81	2.18	32	4.7	5.8	7.	9.3	11.6	14.	16.3	18.6
11	.8	1.	1.2	1.4	1.6	1.8	2.	2.4	33	4.8	6.	7.2	9.6	12.	14.4	16.8	19.2
12	.87	1.09	1.31	1.53	1.75	1.97	2.18	2.62	34	4.9	6.2	7.4	9.9	12.4	14.8	17.3	19.8
13	.95	1.18	1.42	1.65	1.89	2.12	2.36	2 83	35	5.1	6.3	7.6	10.2	12.7	15.3	17.9	20.4
14	1.02	1.27	1.52	1.77	2.02	2.27	2 53	3.05	36	5.2	6.5	7.8	10.5	13.1	15.7	18.3	20.9
15	1.09	1.36	1.64	1.91	2.19	2.46	2.73	3.29	37	5.4	6.7	8.1	10.8	13.5	16.2	18.9	21.5
16	1.16	1.45	1.74	2.03	2.32	2.61	2.91	3.48	38	5.5	6.9	8.3	11.	13.8	16.6	19.3	22.1
17	1.24	1.55	1.85	2.16	2.47	2.78	3.09	3.70	39	5.7	7.1	8.5	11.3	14.2	17.	19.9	22.7
18	1.31	1.64	1.96	2.29	2.62	2.95	3.27	3.92	40	5.8	7.3	8.7	11.6	14.6	17.5	20.4	23.3
19	1.39	1.73	2.07	2.42	2.76	3.11	3.45	4.14	42	6.1	7.6	9.2	12.2	15.3	18.2	21.4	24.3
20	1 45	1.82	2.18	2.55	2.91	3.27	3.64	4.36	44	6.4	8.	9.6	12.8	16.	19.2	22.4	25.6
21	1.52	1.91	2.29	2.67	3.05	3.44	3.82	4.58	46	6.7	8.4	10.	13.4	16.	20.1	23.4	26.8
22	1.66	2.	2.4	2.8	3.2	3.6	4.	4.8	48	7.	8.8	10.4	14.	17.4	21.	24.4	28.
23	1.67	2.09	2.51	2.93	3.35	3.75	4.18	5.02	50	7.2	9.	10.9	14.6	18.2	21.8	25.4	29.
									54	7.8	9.8	11.8	15.6	19.6	23.6	26.4	31.2
									60	8.8	10.8	13.1	17.4	21.8	26.2	30.6	34.8

To Find the Power a Belt Will Transmit.

When the pulleys differ in size, the larger of the two is lost sight of, and the small pulley only must be considered.

The number of degrees of belt contact on the small pulley must be got at as nearly as possible.

For 180 degrees useful effect	1.00
" 157½ " " "	.92
" 135 " " "	.84
" 112½ " " "	.76
" 90 " " "	.64

RULE: Divide the speed of the belt in feet per minute by 800, multiply the quotient by the width of belt in inches and by 1.00 when the arc of contact is 180 degrees, and so on for other degrees of contact.

Driving Power of Oak Tanned Leather Belts.

WIDTH OF BELTS TRAVELING 750 FEET PER MINUTE.	HORSE-POWER.
1 inch	1.
2 "	2.142
3 "	3.480
4 "	5.028
5 "	6.788
6 "	8.726
7 "	10.953
8 "	13.360
9 "	15.982
10 "	18.825
11 "	21.882
12 "	25.158

Width and Velocity of Belting.

HORSE POWER.	VELOCITY IN FT. PER MINUTE.	DIAMETER OF SMALL PULLEY IN INCHES.	BELT PULL PER INCH WIDTH IN POUNDS.	THICKNESS.	WIDTH OF BELT. IN USE.	WEBBER'S RULE.	NAGLE'S RULE.	REALEAUX'S RULE.	HANDY RULE.
375	5,600	60	98	Double	24	22	34	31½	27
250	3,080	84	58	4-ply	48	50	28	28	23
220	2,451	42	135	Single	22	98	31	84	70
175	3,179	72	93	Double	19½	15½	25	26	22
175	3,629	115½	55	"	29	15	22	23	20
130	2,117	70	113	"	18	18	22	29	24½
125	3,490	84	82	"	14½	8	17	17	14½
90	2,860	60	87	"	12	10	15	15	12½
77	2,268	60	77	"	14½	12	12	16	13½
45	2,000	48	37	Single	20	21	15	21	18
49	2,111	72	24	"	14	21	18	21	18½
43	1,800	60	44	"	18	20	14	23	19
41	1,809	60	42	"	17½	12	16	21	18
40	2,000	72	37	"	8	14	13	19	16
18	850	22	116	Double	6	19	8	10	8½
8	942	30	40	Single	7	12	8	8	7

The average breaking strain of a leather belt is 3,200 lbs. per square inch of cross section.

A very good quality of leather belt will sustain a little more than this In use on pulleys, belts should not be subjected to a greater strain than $\frac{1}{11}$ of their tensile strength, or 290 lbs. per square inch of cross section. This will be 55 lbs. average strain for every inch in width of single belt $\frac{3}{16}$ of an inch thick.

Weight of Balls.

DIAM. IN INCHES	CAST LEAD.	CAST COPPER	CAST BRASS.	CAST IRON.	DIAM. IN INCHES.	CAST LEAD.	CAST COPPER.	CAST BRASS.	CAST IRON.
.....	Lbs.	Lbs.	Lbs.	Lbs.	.....	Lbs.	Lbs.	Lbs.	Lbs.
½	.026	.021	.019	.017	5.¼	30.1	24.1	21.5	19.8
¾	.088	.070	.063	.058	½	34.7	27.7	24.7	22.7
1.	.209	.167	.148	.136	¾	39.6	31.7	28.3	25.9
¼	.408	.325	.290	.266	6.	45.0	36.0	32.0	29.4
½	.705	.562	.501	.460	½	57.2	45.8	40.8	37.4
¾	1.12	.893	.795	.731	7.	71.5	57.2	50.9	46.8
2.	1.67	1.33	1.19	1.07	½	88.	70.3	62.6	57.5
¼	2.38	1.90	1.69	1.55	8.	106.	85.3	76.0	69.8
½	3.25	2.60	2.32	2.13	½	127.	102.	91.2	83.7
¾	4.34	3.47	3.09	2.83	9.	151.	121.	108.	99.4
3.	5.63	4.50	4.01	3.68	½	178.	143.	127.	117.
¼	7.15	5.72	5.10	4.68	10.	208.	167.	148.	136.
½	8.94	7.14	6.36	5.85	½	241.	193.	172.	158.
¾	11.0	8.79	7.83	7.19	11.	277.	222.	198.	182.
4.	13.4	10.7	9.50	8.73	½	317.	253.	226.	207.
¼	16.0	12.8	11.4	10.5	12	360.	288.	257.	236.
½	18.9	15.2	13.5	12.4					
¾	22.7	17.9	15.9	14.6					
5.	26.0	20.8	18.6	17.0					

The weights of balls are as the cubes of their diams.

Pure Bell Metal Bells.

MADE OF BANCA TIN AND CHILI COPPER. TABLE OF WEIGHTS, TONES, DIMENSIONS, ETC.

POUNDS. WEIGHT ABOUT	MEDIUM TONE.	DIAMETER BELL.	SIZE OF FRAME. OUTSIDE.	DIAMETER WHEEL.
400	D	27 inches.	3 feet 4 inches.	3 feet
450	C♯	28 "	4 "	4 " 4 inches.
500	C	29 "	4 "	4 " 4 "
550	C	29 "	4 "	4 " 4 "
600	B	30 "	4 "	4 " 4 "
650	B♭	31 "	4 " 5 "	4 " 4 "
700	B♭	32 "	4 " 5 "	4 " 9 "
750	B♭	33 "	4 " 5 "	4 " 9 "
800	A♭	34 "	4 " 5 "	4 " 9 "
900	A♭	35 "	4 " 5 "	4 " 9 "
1,000	A♭	36 "	4 " 9 "	5 " 6 "
1,100	G	37 "	4 " 9 "	5 " 6 "
1,200	G	38 "	4 " 9 "	5 " 6 "
1,300	G♭	39 "	4 "11 "	5 " 6 "
1,400	F♯	40 "	4 "11 "	6 " 3 "
1,500	F♯	41 "	4 "11 "	6 " 3 "
1,600	F♯	42 "	5 " 4 "	6 " 3 "
1,700	F	43 "	5 " 4 "	6 " 3 "
1,800	F	44 "	5 " 4 "	6 " 3 "
2,000	E	46 "	5 " 8 "	7 "
2,200	E♭	47 "	5 " 8 "	7 "
2,500	E♭	50 "	6 " 1 "	7 "
2,800	E♭	52 "	6 " 1 "	7 " 6 "
3,000	D	54 "	6 " 8 "	7 " 6 "
3,400	C♯	55 "	6 " 8 "	7 " 6 "
3,700	C♯	56 "	7 "	7 " 6 "
4,200	C	58 "	7 "	8 "
4,800	B♭	60 "		8 "
5,500	B♭	63 "		8 "
6,200	A	66 "		8 "

Sturtevant Pressure Blowers.

FOR CUPOLA FURNACES.

NO. OF THE BLOWER.	DIAM. IN INCHES INSIDE OF CUPOLA.	MELTING CAPACITY PER HOUR IN LBS.	NO. OF SQUARE INCHES OF BLAST.	CUB. FEET OF AIR PER MINUTE.	SPEED.	PRESSURE IN OUNCES OF BLAST.	HORSE-POWER REQUIRED.
1	22	1200	4	324	4135	5	0.5
2	26	1900	5.7	507	3756	6	1
3	30	2880	8	768	3250	7	1.8
4	35	4130	10.7	1102	3100	8	3
5	40	6178	14.2	1646	2900	10	5.5
6	46	8900	18.7	2375	2820	12	9.7
7	53	12500	24.3	3353	2600	14	16
8	60	16560	32	4416	2270	14	22
9	72	23800	43	6364	2100	16	35
10	84	33300	60	8880	1815	16	48

One square inch of blast is sufficient for one forge fire, or 90 square inches area of cupola furnace.

Sturtevant's Pressure Blowers.

FOR FORGE FIRES.

No. of Blower.	Square Inches of Blast and Number of Forges.	Revs. per Min.	Cubic Feet of Air per Min.	H. P. Required.	Revs. per Min.	Cubic Feet of Air per Min.	H. P. Required.	Revs. per Min.	Cubic Feet of Air per Min.	H. P. Required.	Revs. per Min.	Cubic Feet of Air per Min.	H. P. Required.	Revs. per Min.	Cubic Feet of Air per Min.	H. P. Required.
1	5	3725	360	0.5												
2	7	3103	504	0.7												
3	10	2456	720	1	2753	810	1.4									
4	14	2224	1008	1.4	2470	1134	1.9									
5	20	1814	1440	2	2026	1620	2.8	2215	1780	3.6						
6	26	1619	1872	2.6	1797	2106	3.6	1960	2314	4.7	2009	2496	6			
7	36	1344	2592	3.6	1507	2916	5	1641	3204	6.5	1768	3456	8.3	1898	3708	10.1
8	46	1200	3312	4.5	1330	3726	6.4	1445	4094	8.4	1565	4416	10.6	1675	4738	13
9	60	1035	4320	5.9	1145	4860	8.3	1250	5340	10.9	1350	5760	13.8	1446	6180	16.9
10	80	902	5760	7.9	995	6480	11.2	1085	7120	14.5	1168	7680	18.4	1253	8240	22.5
Pressure.		4 oz.			5 oz.			6 oz.			7 oz.			8 oz.		

One square inch of blast is sufficient for one forge fire.

Blower and Exhausting Fans.

NO. OF BLOWER OR EXHAUSTER.	REVOLUTIONS PER MINUTE TWO OUNCE BLAST FOR BOILER FIRES.	REVOLUTIONS PER MINUTE FOUR OUNCE BLAST FOR FORGE FIRES.	SQ. FEET OF BOILER GRATE SURFACE SUPPLIED BY BLOWER.
0	2,600	3,600	6
1	2,300	3,200	8
2	1,928	2,682	10
3	1,638	2,279	14
4	1,410	1,961	20
5	1,194	1,662	27
6	1,018	1,417	36
7	878	1,234	48
8	766	1,065	62
9	671	932	80
10	598	831	100

Sturtevant's "Monogram" Blowers and Exhausters, as Applied to Boilers, Heating Furnaces and Ventilation.

NO. OF BLOWER.	Square inches of Blast.	Revolutions per minute.	Cubic feet of air per minute.	Horse Power required.	Revolutions per minute.	Cubic feet of air per minute.	Horse Power required.	Revolutions per minute.	Cubic feet of air per minute.	Horse Power required.	Revolutions per minute.	Cubic feet of air per minute.	Horse Power required.	Revolutions per minute.	Cubic feet of air per minute.	Horse Power required.	Revolutions per minute.	Cubic feet of air per minute.	Horse Power required.	Revolutions per minute.	Cubic feet of air per minute.	Horse Power required.	Revolutions per minute.	Cubic feet of air per minute.	Horse Power required.	Revolutions per minute.	Cubic feet of air per minute.	Horse Power requiled.
0	11	1323	279	.06	1863	395	.15	2274	485	.28	2615	561	.44	2912	626	.61	3177	688	.80	3417	744	1.02	3637	798	1.24	3843	845	1.48	4037	892	1.74
1	15	1159	380	.08	1632	539	.21	1992	661	.38	2291	764	.60	2550	853	.83	2782	938	1.10	2992	1014	1.39	3184	1086	1.69	3365	1153	2.02	3552	1216	2.37
2	20	976	508	.10	1373	719	.28	1677	882	.51	1928	1019	.79	2147	1138	1.11	2343	1251	1.46	2520	1353	1.85	2682	1447	2.25	2833	1537	2.69	2974	1622	3.16
3	28	829	710	.14	1167	1006	.40	1425	1235	.72	1638	1427	1.11	1824	1593	1.56	1900	1751	2.05	2140	1894	2.60	2279	2026	3.16	2455	2153	3.77	2527	2270	4.42
4	38	714	967	.19	1650	1365	.53	1227	1675	.98	1410	1936	1.51	1570	2162	2.11	1713	2377	2.78	1842	2570	3.52	1961	2750	4.28	2072	2920	5.12	2176	3081	6.00
5	53	604	1346	.26	852	1904	.74	1038	2337	1.35	1194	2701	2.10	1330	3016	2.95	1450	3315	3.88	1560	3584	4.92	1662	3836	5.97	1755	4073	7.14	1843	4297	8.37
6	72	519	1829	.36	726	2587	1.03	886	3174	1.85	1018	3669	2.86	1134	4100	4.00	1237	4502	5.27	1331	4869	6.68	1417	5211	8.11	1496	5532	9.67	1571	5838	11.37
7	95	449	2413	.47	632	3413	1.33	772	4186	2.44	878	4847	3.77	988	5405	5.28	1078	5941	6.95	1159	6425	8.67	1234	6875	10.71	1303	7300	12.80	1368	7703	15.01
8	120	387	3048	.59	545	4311	1.68	665	5291	3.10	766	6115	4.76	852	6828	6.68	930	7505	8.78	1000	8116	11.13	1065	8684	13.52	1124	9221	16.16	1180	9730	18.96
9	160	339	4064	.79	477	5749	2.24	583	7054	4.11	671	8154	6.35	748	9104	8.89	815	10006	11.70	876	10821	14.84	932	11579	18.03	995	12294	21.55	1034	12973	25.28
10	210	302	5334	1.04	426	7545	2.94	519	9253	5.40	598	10702	8.34	667	11949	11.67	726	13133	15.36	781	14202	18.05	831	15198	23.67	878	16136	28.19	922	17027	33.18
PRESSURE		½ Ounce.			1 Ounce.			1½ Ounces.			2 Ounces.			2½ Ounces.			3 Ounces.			3½ Ounces.			4 Ounces.			4½ Ounces.			5 Ounces.		

Diameter of Blast Pipes for Cupola, Forge and Furnace Pressure Blowers.

SIZE OF BLOWER IN BOLD FACE TYPE AT THE HEAD OF EACH DIVISION OF TABLE.

NO. 1.

Cubic feet of air transmitted per minute.	LENGTHS OF BLAST PIPE IN FT. 50	100	150	200	300
	DIAMETER IN INCHES.				
360	5⅜	6¼	6¾	7¼	7⅞
515	6⅜	7⅛	7⅞	8¼	8⅞
635	6¾	7¾	8½	9	9⅝
740	7¼	8¼	9	9½	10¼

NO. 2.

Cubic feet of air transmitted per minute.	LENGTHS OF BLAST PIPE IN FT. 50	100	150	200	300
	DIAMETER IN INCHES.				
504	6¼	7⅛	7⅞	8¼	8⅞
721	7¼	8½	9	9½	10¼
889	7⅞	9	9¾	10⅜	11
1036	8⅜	9½	10⅜	11	11⅞

NO. 3.

Cubic feet of air transmitted per minute.	LENGTHS OF BLAST PIPE IN FT. 50	100	150	200	300
	DIAMETER IN INCHES.				
720	7¼	8¼	9	9½	10¼
1030	8¾	9½	10⅜	11	11⅞
1270	9⅛	10¾	11¼	11⅞	12¾
1480	9⅝	11	12	12⅝	13½

NO. 4.

Cubic feet of air transmitted per minute.	LENGTHS OF BLAST PIPE IN FT. 50	100	150	200	300
	DIAMETER IN INCHES.				
1008	8¼	9⅜	10¼	10⅞	11⅝
1442	9½	10⅞	11⅞	12½	13⅜
1778	10⅜	11⅞	12⅞	13⅝	14⅝
2072	11	12⅝	13¾	14½	15½

NO. 5.

Cubic feet of air transmitted per minute.	LENGTHS OF BLAST PIPE IN FT. 50	100	150	200	300
	DIAMETER IN INCHES.				
1440	9½	10⅞	11⅞	12½	13⅜
2060	11	12⅝	13¾	14½	15½
2540	11⅞	13⅝	14⅞	15⅝	16⅞
2960	12¾	14½	15⅞	16⅝	18

NO. 6.

Cubic feet of air transmitted per minute.	LENGTHS OF BLAST PIPE IN FT. 50	100	150	200	300
	DIAMETER IN INCHES.				
1872	10⅝	12⅛	13¼	13⅞	15
2678	12¼	14	15⅛	16	17¼
3302	13¼	15⅛	16½	17½	18⅞
3848	14⅛	16⅛	17½	18½	20⅛

NO. 7.

Cubic feet of air transmitted per minute.	LENGTHS OF BLAST PIPE IN FT.				
	50	100	150	200	300
	DIAMETER IN INCHES.				
2592	12	13¾	15	15⅞	17⅛
3708	13⅜	15⅞	17¼	18¼	19¾
4572	15⅓	17⅝	18⅞	19⅞	21⅝
5328	16	18½	20	21¼	23

NO. 8.

Cubic feet of air transmitted per minute.	LENGTHS OF BLAST PIPE IN FT.				
	50	100	150	200	300
	DIAMETER IN INCHES.				
3312	13¼	15⅛	16½	17½	18⅞
4738	15¼	17⅝	19⅛	20⅛	21⅞
5842	16⅝	19⅛	20¾	22	23⅝
6808	17⅝	20¼	22⅛	23⅝	25⅜

NO. 9.

Cubic feet of air transmitted per minute.	LENGTHS OF BLAST PIPE IN FT.				
	50	100	150	200	300
	DIAMETER IN INCHES.				
4320	14¾	17	18⅜	19⅜	21⅛
6180	17	19½	21¼	22½	24⅝
7620	18⅝	21⅛	23⅛	24⅜	26½
8880	19½	22½	24½	26	28⅛

NO. 10.

Cubic feet of air transmitted per minute.	LENGTHS OF BLAST PIPE IN FT.				
	50	100	150	200	300
	DIAMETER IN INCHES				
5760	16½	19	20⅝	21⅞	23¾
8240	18⅞	21¾	23¾	25⅛	27¼
10160	20⅝	23¾	25⅞	27⅜	29⅝
11840	22⅛	25¼	27½	29⅛	31½

For testing a leather belt, a cutting of the material about 0.03 of an inch in thickness is placed in strong vinegar. If the leather has been thoroughly acted upon by the tanning, and is hence of good quality, it will remain, for months even, immersed without alteration, simply becoming a little darker in color. But, on the contrary, if not well impregnated by the tannin, the fibres will quickly swell, and after a short period become transformed into a gelatinous mass.

Portable glue for draughtsmen. Add together 5 ozs. of white glue, 2 ozs. of sugar, and 8 ozs. of clear water. Melt these in a water-bath, then cast into molds, and for use dissolve in warm water.

To make liquid glue. Take 16 ozs. of white glue, 4 ozs. of dry white lead, 4 ozs. of alcohol, and 2 pints of clear soft water. Stir well and bottle while hot.

Water-proof glue. Common glue, 1 pound, boiled in 2 quarts of skimmed milk.

Cupola and Forge Blowers.

TABLE FOR EQUALIZING THE DIAMETERS OF PIPES.

Always extend main pipes, so as to make branch pipes as short as possible. Parties putting up blast pipes are very liable to think that because the combined area of four 3-inch pipes is the same as one 6-inch pipe that the four pipes will convey the same quantity of air the same distance with the same ease and freedom that the 6-inch will; whereas, it actually does take 5.7—almost six 3-inch pipes of same length. Again, nine 6-inch pipes will have the combined area of one 18-inch pipe, but in actual practice it takes just sixteen 6-inch pipes to do the work of one 18-inch pipe of same length.

This is due to the excess of friction for every cubic foot of air in the small pipes over that in the large

The large figures at the top of each column give the diameters, in inches, of the branch pipes.

The figures at the intersection of the horizontal line with the vertical give the number of pipes, of the diameter given at the top of the column, that will be equal in capacity for conveying air, to one given opposite in the first column, lengths being equal.

Diameter of Main Blast Pipe in inches.	2	3	4	5	6	7	8	9	10	11	12	13	14	15	16	17	18	19	20	22	24	26	28	30	36	42	48	54	60
2																													
3	2.7																												
4	5.7	2.0																											
5	9.8	3.6	1.8																										
6	16	5.7	2.8	1.6																									
7	23	8.3	4.1	2.3	1.5																								
8	32	12	5.7	3.2	2.1	1.4																							
9	42	16	7.6	4.3	2.8	1.9	1.3																						
10	56	20	9.9	5.7	3.6	2.4	1.7	1.3																					
11	71	26	12	7.0	4.5	3.1	2.2	1.7	1.3																				
12	88	32	16	9.0	5.7	3.8	2.8	2.0	1.6	1.2																			
13	107	39	19	11	6.9	4.7	3.4	2.5	1.9	1.5	1.2																		
14	129	47	23	13	8.3	5.7	4.1	3.0	2.3	1.8	1.5	1.2																	
15	152	56	27	16	9.9	6.7	4.8	3.6	2.8	2.2	1.8	1.4	1.2																
16	180	65	32	18	11	7.9	5.7	4.2	3.2	2.6	2.1	1.7	1.4	1.2															
17	208	76	37	21	13	9.2	6.6	4.9	3.8	2.9	2.4	2.0	1.6	1.4	1.2														
18	239	88	43	24	16	10	7.7	5.7	4.3	3.4	2.8	2.3	1.9	1.6	1.3	1.2													
19	275	100	49	28	18	12	8.8	6.5	5.0	3.9	3.2	2.6	2.2	1.8	1.5	1.3	1.2												
20	313	114	56	32	20	14	9.9	7.4	5.7	4.5	3.6	2.9	2.5	2.1	1.7	1.5	1.3	1.4											
22	398	145	71	41	26	18	13	9.3	7.2	5.7	4.5	3.7	3.1	2.6	2.2	1.9	1.7	1.4	1.3										
24	493	180	88	50	32	22	16	12	8.9	7.6	5.7	4.6	3.8	3.2	2.9	2.4	2.1	1.8	1.6	1.2									
26	605	219	108	62	39	27	19	14	11	8.6	6.9	5.7	4.7	4.0	3.4	2.9	2.5	2.2	1.9	1.5	1.2								
28	725	265	129	74	48	32	23	17	13	10	8.3	6.8	5.7	4.8	4.1	3.5	3.0	2.6	2.3	1.8	1.5	1.2							
30	864	315	154	88	56	38	28	20	16	12	9.9	8.0	6.7	5.7	4.7	4.1	3 6	3.0	2.6	2.2	1.7	1.4	1.2						
36	1361	497	243	139	88	60	43	32	25	19	16	13	11	8.9	7.6	6.5	5.7	5.0	4.3	3.4	2.7	2.2	1.9	1.6					
42	2000	730	358	205	129	88	63	47	36	29	23	19	16	13	11	9.6	8.5	7.3	6.4	5.0	4.1	3.3	2.8	2.3	1.5				
48	2792	1081	492	282	180	123	88	66	50	39	32	26	22	18	16	13	12	10	8.9	7.0	5.7	4.7	3.8	3.2	2.1	1.4			
54	3753	1368	671	384	244	166	119	88	68	53	43	35	29	24	21	18	16	15	12	9.4	7.6	6.2	5.2	4.3	2.8	1.9	1.3		
60	4579	1781	872	499	314	215	154	115	88	69	56	46	38	32	27	23	20	18	16	12	9.9	8.1	6.7	5.7	3.6	2.4	1.8	1.3	

FOR LARGER SIZES USE SAME PROPORTIONS.

Table of Speeds and Capacities of Buffalo Fan Blowers.

AS APPLIED TO BOILERS, FURNACES, ETC.

No. of Blower.	Boilers and Furnaces. 2-oz. pressure.				Boilers and Furnaces. 4-oz. pressure.				No. of Blower.	Air Furnaces. 6-oz. pressure.			
	No. of Square Feet of Grate Surface.	Speed.	Cubic Feet of Air Per Minute.	Horse-power Required.	No. of Square Feet of Grate Surface.	Speed.	Cubic Feet of Air Per Minute.	Horse-power Required.		No. of Square Feet of Grate Surface.	Speed.	Cubic Feet of Air Per Minute.	Horse power Required.
1 B	3	3495	295	0.2	4	4963	425	0.5	1 B	5	6104	495	0.9
2 B	4	2823	375	0.3	6	3994	535	0.6	2 B	7	4929	675	1.1
3 B	6	2158	561	0.4	8	3065	814	0.9	3 B	10	3769	990	1.6
4 B	10	1706	1025	0.6	15	2424	1517	1.6	4 B	18	2979	1845	3.
5 B	14	1529	1515	0.8	22	2172	2105	2.3	5 B	26	2670	2625	4.3
6 B	18	1394	1870	1.1	27	1967	2650	3.	6 B	33	2419	3285	5.4
7 B	26	1203	2695	1.5	38	1709	3805	4.1	7 B	47	2102	4725	7.7
8 B	37	1019	3670	2.	52	1447	5229	5.6	8 B	64	1781	6435	10.5
9 B	46	884	4790	2.6	68	1268	6882	7.4	9 B	83	1545	8370	13.7
10 B	73	706	7510	4.	108	1003	10935	15.2	10 B	131	1221	13185	21.4

Table of Capacities of Blowers and Exhausters.

Diameter of Fan Wheel.	Pressure of Blast.	Revolutions.	Cubic Feet of Air.	Horse-power.
50 inches...	¼ oz.	197	6500	.67
	½ "	280	9300	1.90
	¾ "	340	11500	3.10
	1 "	400	13150	5.38
54 inches...	¼ oz.	180	10000	.92
	½ "	250	12500	2.61
	¾ "	300	15000	4.27
	1 "	350	17500	7.40
65 inches...	¼ oz.	150	12500	1.19
	½ "	215	17000	3 38
	¾ "	265	22000	5.60
	1 "	300	25000	9.55
75 inches...	¼ oz.	125	16000	1.53
	½ "	180	22500	4.55
	¾ "	220	27500	7.42
	1 "	260	32000	12.86
85 inches...	¼ oz.	112	20500	2.08
	½ "	160	29000	5.88
	¾ "	195	35500	9.61
	1 "	225	40700	16.66
95 inches...	¼ oz.	105	28500	2.90
	½ "	145	40200	8.22
	¾ "	180	49300	13.42
	1 "	207	56875	23.27
110 inches...	¼ oz.	90	39500	4.93
	½ "	120	55880	11.42
	¾ "	150	68475	18.67
	1 "	180	79046	32.34

BRICK LAYING.

Brick work is generally measured by 1,000 bricks laid in the wall.

The U. S. Standard is 22 bricks per cubic foot laid in the wall. But the most general, and probably the most fair one, is to allow a certain number to the superficial foot for the different thickness of walls built.

The following scale will be a fair average:

4½	inch	Wall, or	½	Brick	per	Superficial Foot,	7 Bricks.
9	"		1	"	"		14 "
13	"		1½	"	"		21 "
18	"		2	"	"		28 "
22	"		2½	"	"		35 "

and 7 bricks additional for each half brick added to thickness.

A brick-layer, with a laborer to keep him supplied with materials, will, in common house walls, average about 1,500 bricks; in neater outer faces, 1,200; in massive work, he should average 2,000; and in large arches, 1,500 bricks per day.

Eight bushels (125 lbs. per bushel) of fire clay will lay 1,000 bricks. A load of mortar measures 1 cubic yard, or 27 cubic feet, and requires ⅞ of a cubic yard of sand and 9 to 10 bushels of lime, and will fill 30 hods. A barrel (about 250 lbs.) of lump lime is calculated to lay 1,000 bricks. Paving brick, 36 laid flat, or 82 on edge to the yard.

In St. Louis, a 4-inch wall contains 7 bricks to the square foot. Multiply any other thickness of wall by 7 for the number of bricks to the square foot.

A brick is 8½″ long, 4¼″ wide, and 2⅜″ thick, and 21 bricks make a cubic foot laid in the wall.

Stock brick, weight 5¼ lbs each.

Fancy " " 4¾ lbs. "

Brick Work and Plastering.

3½ barrels of lime will do 100 square yards of common plastering, 2 coats.

2 barrels of lime will do 100 square yards of common plastering, 1 coat.

1 bushel of hair will do 100 square yards common plastering.

2 bushels of good lime properly slacked and mixed with proper proportion of good sand, will make sufficient mortar to lay 1,000 bricks.

⅓ of a barrel of cement will lay one perch of ordinary rubble masonry,

DEFINITION OF BIBLE TERMS.

A Cab was 3 pints.
An Omer was 6 "
A Firkin was 7 "
A Log was ½ "
A Lin was 1 gallon and 2 pints.
An Ephad was 7 gallons and 5 pints.
A Gerah was a cent.

A Piece of Silver was 13 cents.
A Shekel of Silver was about 50 cents.
A Farthing was 7 cents.
A Mite was less than 2 mills U. S. currency.
A Shekel of Gold was $8.00.
A Talent of Silver was $538 30.
A Talent of Gold was $13,809.00.
A day's journey was 33⅓ miles.
A Sabbath day's journey was about 1 English mile.
A hand's breadth was 3⅝ inches.
A finger's " " 1 inch.
A cubit was nearly 22 inches.
Ezekiel's Reed was nearly 11 feet.

ELECTRIC WELDING.

An electric welding machine is nothing more or less than a "convertor" the secondary coil of which contains but a single turn, or one coil of wire. It must have a large cross section of several square inches in order to carry the heavy current induced therein without becoming heated. Upon the size and length of wire in the primary coil will depend the power of the machine because the greater the "ampere turns" the larger the induced current in the secondary coil. The "ampere turns" simply mean the number of amperes sent through the primary coils, multiplied by the total number of turns of wire in such coils, and their size and length must be just sufficient to take care of the entire current from the alternating current generator that is to be used. After the secondary coil has been fitted with compound clamps for holding the pieces to be welded, and for squeezing them together when hot—when this has been done, and the primary coil wound on, the welding machine is ready for use, and nothing remains to be done except to clamp in the work and turn on the current.

ADIABATIC CURVE.

The word adiabatic means *no transmission.* The adiabatic curve recognizes the fact that as the temperature of steam varies with the pressure, the fall of temperature which accompanies expansion, and the rise which accompanies compression, causes a greater change of pressure for a given change of volume than would take place if the temperature remained constant. The name *adiabatic* is applied to the curve, because if no transmission of heat takes place from without to the steam during expansion, or from it during compression, a change of temperature due to the change of volume must necessarily take place. The adiabatic curve is the true theoretical one.

BOARD MEASURE.

The following Tables give feet of Board Measure to one running foot of board. Area of a running foot multiplied by length in feet, will give superficial contents of board in square feet.

THICKNESS.	WIDTH OF BOARD IN INCHES.																	
INCHES.	½	¾	1	1¼	1½	1¾	2	2¼	2½	2¾	3	3¼	3½	3¾	4	4¼	4½	4¾
¼	.0104	.0156	.0208	.026	.0313	.0365	.0417	.0469	.0521	.0573	.0625	.0678	.073	.078	.0833	.0885	.0937	.099
½	.0209	.0313	.0417	.0521	.0625	.0729	.0833	.0938	.1042	.1145	.125	.1355	.1457	.1562	.1668	.177	.1875	.198
¾	.0313	.0469	.0625	.0781	.0938	.1094	.125	.1406	.1563	.172	.1875	.203	.2188	.2344	.25	.2756	.2813	.297
1	.0417	.0625	.0833	.1042	.125	.1458	.1667	.1875	.2083	.2292	.25	.2708	.2917	.3125	.3334	.3542	.375	.3958
¼	.0521	.0781	.1042	.1302	.1563	.1823	.2083	.2344	.2604	.2865	.3125	.3385	.3645	.3906	.4164	.4426	.4687	.494
½	.0625	.0938	.125	.1563	.1875	.2188	.25	.2813	.3125	.3438	.375	.4062	.4375	.4687	.5	.5314	.5625	.5938
¾	.0729	.1094	.1458	.1823	.2187	.2552	.2917	.3281	.3646	.401	.4375	.474	.5105	.5470	.5834	.6198	.6563	.6927
2	.0833	.125	.1667	.2083	.25	.2917	.3333	.375	.4166	.4583	.5	.5417	.5834	.625	.6667	.7084	.75	.7917
¼	.0938	.1406	.1875	.2344	.2813	.3281	.375	.4219	.4688	.5155	.5625	.6095	.6563	.703	.75	.797	.8437	.8905
½	.1042	.1563	.2083	.2604	.3125	.3646	.4167	.4688	.5208	.573	.625	.677	.7292	.7814	.8334	.8855	.9375	.9895
¾	.1146	.1719	.2292	.2865	.3438	.401	.4583	.5156	.573	.6302	.6875	.7448	.802	.8595	.9167	.974	1.03	1.09
3	.125	.1875	.25	.3125	.375	.4375	.5	.5625	.625	.6875	.75	.8125	.875	.9375	1.	1.063	1.125	1.188
¼	.1355	.2032	.2708	.3385	.4063	.4739	.5416	.6094	.677	.7448	.8125	.8802	.948	1.016	1.083	1.15	1.22	1.286
½	.1457	.2186	.2917	.3646	.4375	.5104	.5833	.6563	.7292	.802	.875	.948	1.021	1.095	1.168	1.24	1.314	1.386
¾	.1563	.2345	.3125	.3906	.4689	.5469	.625	.7031	.7813	.8595	.9375	1.015	1.095	1.172	1.25	1.327	1.406	1.485
4	.1666	.25	.3333	.4167	.5	.5833	.6667	.75	.8333	.9167	1.	1.802	1.168	1.25	1.333	1.415	1.5	1.583
¼	.177	.2655	.3542	.4427	.5312	.6198	.7083	.797	.8854	.974	1.062	1.15	1.24	1.328	1 418	1.505	1.595	1.682
½	.1875	.2813	.375	.4688	.5625	.6563	.75	.8438	.9375	1.03	1.125	1.22	1.313	1.405	1.5	1.593	1.689	1.782
¾	.193	.297	.3958	.4948	.5938	.6927	.7917	.8905	.9895	1.086	1.187	1.285	1.385	1.485	1.584	1.68	1.73	1.88
5	.2083	.3125	.4167	.5208	.625	.7292	.8333	.9375	1.004	1.146	1.25	1.355	1.457	1.567	1.667	1.77	1.875	1.98
¼	.2187	.3231	.4375	.547	.6562	.7655	.875	.9845	1.095	1.203	1.313	1.421	1.53	1.645	1.75	1.858	1.97	2.077
½	.2291	.3437	.4583	.5729	.6875	.802	.9166	1.03	1.145	1.26	1.375	1.49	1.603	1.722	1.834	1.946	2.063	2.178
¾	.2395	.3594	.4791	.599	.7187	.8385	.9583	1.077	1.198	1.319	1.438	1.556	1.675	1.8	1.916	2.034	2.155	
6	.25	.375	.5	.625	.75	.875	1.	1.125	1.25	1.375	1.5	1.625	1.75	1.875	2.	2.125	2.25	2.375

Board Measure—Continued.

THICKNESS	WIDTH OF BOARD IN INCHES.																
INCHES.	5	5¼	5½	5¾	6	6½	6¾	7	7½	8	8½	9	9½	10	10½	11	11½	12
¼	.1042	.1095	.1145	.1198	.125	.1355	.1405	.1458	.1563	.1666	.1771	.1875	.198	.2083	.2187	.2292	.2395	.25
½	.2084	.2189	.2292	.2395	.25	.2708	.2813	.2917	.3125	.3334	.3542	.375	.3958	.4167	.4375	.4583	.4792	.5
¾	.3125	.328	.3438	.3597	.375	.4063	.422	.4375	.4687	.5	.5312	.5625	.5938	.625	.6562	.6875	.7187	.75
1	.4166	.4375	.4584	.4792	.5	.5416	.5625	.5834	.625	.6667	.7084	.75	.7916	.8334	.875	.9167	.9584	1.
¼	.5208	.547	.573	.599	.625	.677	.703	.7292	.7814	.8334	.8855	.9375	.9896	1.042	1.094	1.146	1.198	1.25
½	.625	.6562	.6875	.7187	.75	.7125	.8438	.875	.9375	1.	1.062	1.125	1.187	1.25	1.312	1.375	1.437	1.5
¾	.7292	.7655	.802	.8385	.875	.948	.9844	1.02	1.095	1.166	1.24	1.312	1.385	1.458	1.531	1 605	1.677	1.75
2	.8334	.875	.9166	.9584	1.	1.083	1 125	1.166	1.25	1.333	1.417	1.5	1.583	1.667	1.75	1.833	1.917	2.
¼	.9375	.9845	1.03	1.077	1.125	1.22	1.266	1.314	1.406	1.5	1.595	1.687	1.78	1.875	1.963	2.062	2.155	2.25
½	1.042	1.095	1.145	1.198	1.25	1.354	1.406	1.459	1.563	1.667	1.77	1.875	1.98	2.083	2.187	2.292	2.395	2.5
¾	1.145	1.203	1.26	1.318	1.375	1.49	1.547	1.604	1.72	1.834	1.948	2.063	2.177	2.292	2.406	2.521	2.635	2.75
3	1.25	1.313	1.375	1.438	1.5	1.625	1.688	1.75	1.875	2.	2.125	2.25	2.375	2.5	2.625	2.75	2.875	3.
¼	1.354	1.422	1.49	1.557	1.625	1.76	1.828	1.895	2.03	2.167	2.302	2.437	2.573	2.708	2.845	2.98	3.115	3.25
½	1.458	1.53	1.605	1.678	1.75	1.896	1.97	2.042	2.187	2.334	2.48	2.625	2.77	2.917	3.063	3.208	3.354	3.5
¾	1.564	1.64	1.72	1.797	1.875	2.031	2.109	2.187	2.345	2.5	2.655	2.812	2.97	3.125	3.28	3 437	3.594	3.75
4	1.668	1.75	1.834	1.917	2.	2.167	2.25	2.334	2.5	2.667	2.834	3.	3.167	3.334	3·5	3.667	3.833	4.
¼	1.77	1.857	1.948	2.035	2.125	2.302	2.39	2.48	2.655	2.833	3.01	3.188	3.365	3.542	3.719	3.896	4.073	4.25
½	1.875	1.97	2.063	2.155	2.250	2.438	2.53	2.625	2.813	3.	3.187	3.375	3.562	3.75	3.938	4.125	4.313	4.5
¾	1.98	2.079	2.176	2.275	2.375	2.573	2.672	2.77	2.97	3.166	3.366	3.563	3.76	3.958	4.155	4.354	4.552	4.75
5	2.084	2.187	2.292	2.395	2.5	2.708	2.813	2.917	3.125	3.334	3.542	3.75	3.958	4.16	4.375	4.583	4.79	5.
¼	2.187	2.297	2.405	2.515	2.625	2.845	2.954	3.063	3.28	3.5	3.72	3.937	4.155	4.375	4.595	4.813	5.032	5.25
½	2.293	2.406	2.52	2.634	2.750	2.98	3.095	3.209	3.437	3.666	3.896	4.125	4.353	4.584	4.812	5.041	5.27	5.5
¾	2.397	2.516	2.635	2.755	2.875	3.116	3.234	3.355	3.595	3.834	4.072	4.313	4.553	4 793	5.03	5.271	5.51	5.75
6	2.5	2.625	2.75	2.875	3.	3.25	3.375	3.5	3.75	4.	4.25	4.5	4.75	5.	5.25	5.5	5.75	6.

APPLICATION OF TABLE.—A board is 1 inch thick, 1 foot 4¾ inches wide by 21 feet long. What is its contents? *Answer:* 1 foot equals 1, and 4¾ equal .3958, therefore 1 foot 4¾ inches equal 1.3958, multiplied by 21, equal 29.3, which is contents of board.

TABLE OF LOGS REDUCED TO BOARD MEASURE.

Showing the number of feet any log from 10 to 24 feet long, and from 12 to 50 inches diameter (measured at the small end) will produce when sawed into *square-edged inch Boards.*

LENGTH, FEET.	DIAMETERS.																	
	12	13	14	15	16	17	18	19	20	21	22	23	24	25	26	27	28	29
10	49	61	72	89	99	116	133	150	175	190	209	235	252	287	313	342	363	381
12	59	73	86	107	119	139	160	180	210	228	251	283	303	344	375	411	436	457
14	69	85	100	125	139	162	187	210	245	266	292	330	353	391	439	479	509	533
16	79	97	114	142	159	185	213	240	280	304	334	377	404	459	500	548	582	609
18	88	109	129	160	178	208	240	270	315	342	376	424	454	516	562	616	654	685
20	98	122	143	178	198	232	267	300	350	380	418	470	505	573	625	684	728	761
22	108	134	157	196	218	255	293	330	385	418	460	518	555	631	688	753	800	838
24	118	146	172	214	238	278	320	360	420	456	501	566	606	688	750	821	873	914

LENGTH, FEET.	DIAMETERS.																	
	30	31	32	33	34	35	36	37	38	39	40	41	42	43	44	46	48	50
10	411	444	460	490	500	547	577	644	669	700	752	795	840	872	925	1038	1112	1262
12	493	532	552	588	600	657	692	772	801	840	903	954	1007	1046	1110	1249	1338	1512
14	575	622	644	686	700	766	807	901	934	980	1053	1113	1175	1222	1295	1469	1564	1767
16	657	750	736	784	800	876	923	1029	1068	1120	1204	1272	1343	1369	1400	1662	1790	1983
18	739	799	828	882	900	985	1038	1158	1201	1260	1354	1431	1511	1571	1665	1878	2012	2275
20	821	888	920	980	1000	1095	1152	1287	1335	1400	1505	1590	1679	1745	1850	2084	2338	2525
22	904	976	1012	1078	1100	1204	1268	1415	1468	....	....	....	....	....	....	....	....	....
24	986	1065	1103	1176	1200	1314	1380	1444	1902	....	....	....	....	....	....	....	....	....

FENCE BOARD TABLE.

NO. OF BOARDS HIGH.	ONE MILE.	HALF MILE.	QUARTER MILE.
One	2,640 feet.	1,320 feet.	660 feet.
Two	5,280 "	2,640 "	1,320 "
Three	7,920 "	3,960 "	1,980 "
Four	10,560 "	5,280 "	2,640 "
Five	13,200 "	6,600 "	3,300 "

COMBUSTION AND EXPLOSION.

No oils, *as such*, will burn; much less do they explode. The *vapor* of oils will burn, and when properly mixed with air or oxygen will explode. Oxygen in a gaseous state is necessary to support combustion, and that, for the most part, is found in the atmospheric air. To have a continuous flame in the burning of an oil requires a constant supply of air and vapor at the point of combustion. The wick of a candle or lamp is only to aid in vaporizing the oil. A quart of water can be evaporated very soon by sprinkling it upon suspended cotton goods, but it would require a long time if left in the cup. For this reason "standard oil" that will not burn in a vessel at ordinary temperatures without a wick, will easily take fire when thrown upon porous substances, like our clothing, carpets, etc. Heat stimulates evaporation largely. The heat generated by combustion in case of a burning wick keeps up evaporation, which nearly ceases when the flame is extinguished.

FIRE TEST.—Any oil can be raised to such a temperature that the consequent evaporation will be sufficient to feed a flame from its surface in a vessel without the aid of a wick, and that is called its *fire test*. Standard Refined Petroleum (of most States) requires 110 degrees. Our Head Light (Petroleum) requires 175 degrees. The Paraffine Oil of our manufacture requires 275 degrees. For Crude Oil from Oil Creek, Pennsylvania, and for Naphtha and Gasoline the fire test varies from ordinary temperatures to an unknown point far below zero. The "*flashing point*," which is a little below the "fire test," is the temperature when a sufficient vapor is formed to support a flame an instant, but not permanently. When a quantity of combustible vapor or gas becomes thoroughly mixed with air in proper proportions, and the compound is confined in a vessel or room, igniting it would produce an explosion. This is also true of the ordinary city gas made from coal. Accidents from coal gas are not so likely to occur because the superior density of the air forces the separation; and, if possible, the escape of the gas. On the other hand, the vapor of Naphtha and Gasoline being heavier than the air, the air is forced out, if there is a chance for it to escape, leaving the vessel filled with the vapor, pure and unmixed. In "Standard" Refined Petroleum, 110 degrees fire test, though the evaporation is less, the danger of explosion is somewhat increased, because the density of its vapor is more nearly that of air, rendering the mixture more complete and more permanent. A *full* package of oil may burst by the simple expansion of the liquid in a warm day, but there will be no fire unless it is communicated from another source, for there is no evidence that spontaneous combustion ever occurs with Petroleum.

From the above we can readily see why there is so much less danger of accident when the tanks, barrels, cans, lamps, etc., containing Petroleum, are full of the liquid than when only partially filled; why flame will not ordinarily enter a can containing Naphtha, but will burn simply at the nozzle; why it is more likely to enter a can containing a little oil of heavier gravity and possibly explode it; why a burning heated lamp partially filled with oil, is liable to explode by sudden cooling air rushing in to fill the vacuum made by the condensation of the vapor, carrying the flame of the wick with it; and why thorough ventilation is so important wherever Petroleum Oils are stored in open or leaky packages, and especially in cellars where the cask is subject to frequent draft for retail sales.

Remember that the *vapor* of Petroleum being *invisible* is an *insidious foe*, but, if kept in proper subjection, it becomes a very useful servant.

TABLE SHOWING THE INVESTMENT VALUE OF BONDS.

EXAMPLE:—A $100 TEN PER CENT BOND, HAVING TEN YEARS TO RUN, WILL YIELD 18 PER CENT PER ANNUM UPON THE INVESTMENT, IF PURCHASED AT $68.56; $1,000 BOND AT $685.60

Desired Rate of Investment.	Bonds having 5 years to run.				Bonds having 10 years to run.				Bonds having 15 years to run.				Bonds having 20 yea's to run.				Bonds having 30 years to run			
	6 pr.ct. Bond.	7 pr.ct. Bond	8 pr.ct. Bond.	10pr.c. Bond.	6 pr.ct. Bond.	7 pr.ct. Bond.	8 pr.ct. Bond.	10 pr.c. Bond	6 pr.ct. Bond.	7 pr.ct. Bond.	8 pr.ct. Bond.	10 pr. c Bond.	6 pr.ct. Bond.	7 pr.ct Bond.	8 pr. ct Bond.	10 pr.c Bond.	6 pr.ct Bond.	7 pr.ct Bond.	8 pr.ct Bond.	10pr.c Bond
6	104.00	104.27	108.53	117.06	100.00	107.44	114.88	129.75	100 00	109.80	119.60	139.20	100.00	111.56	123.11	146.23	100.00	113.84	127.68	155.35
7	95.91	100.00	104.09	112.27	93.08	100.00	106.92	120.77	91.07	100.00	108.93	126.78	89.64	100.00	110.36	131.08	87.84	100.00	112.16	136.47
8	92.14	96.07	100.00	107.86	87.05	93.52	100.00	112.95	83.61	91.81	100.00	116.39	81.23	90.61	100.00	118.77	78.32	89.16	100.00	121.68
9	88.66	92.44	96.22	103.78	81.75	87.84	93.92	106.08	77.28	84.85	92.43	107.57	74.25	82.84	91.42	108.58	70.66	80.44	90.22	109.78
10	85.43	89.07	92.71	100.00	77.07	82.80	88.53	100.00	71.84	78.88	85.92	100.00	68.39	76.29	84.19	100.00	64.37	73.28	82.19	100.00
11	82.42	85.94	89.45	96.48	72.89	78.31	83.73	94.58	67.11	73.69	80.27	93.42	63.38	70.70	78.03	92.68	59.10	67.28	75.46	91.82
12	79.62	83.02	86.42	93.21	69.15	74.28	79.43	89.71	62.97	69.14	75.31	87.66	59.05	65.88	72.70	86.35	54.64	62.20	69.76	84.88
13	77.01	80.29	83.58	90.15	65.76	70.65	75.54	85.33	59.31	65.13	70.94	82.56	55.28	61.67	68 06	80.83	50.80	57.83	64.85	78.91
14	74.56	77.74	80.70	87.28	62.69	67.36	72.02	81.35	56.05	61.55	67.04	78.03	51.96	57.96	63.97	75.98	47.46	54.03	60.59	73.73
15	72.26	75.34	78.43	84.59	59.90	64.36	68.81	77.72	53.13	58.34	63.55	73.96	49.01	54·68	60.34	71.67	44.53	50.70	56.86	69.19
16	70.10	73.09	76.08	82.06	57.35	61.61	65.88	74.41	50.50	55.45	60.40	70.30	46.39	51.75	57.32	67.83	41.95	47.75	53.56	65.17
17	68.07	70.97	73.87	79.68	55.00	59.09	63.18	71.36	48.12	52.84	57.56	66.99	44.03	49.12	54.20	64.38	39.65	45.13	50.62	61.59
18	66.15	68.97	71.79	77.43	52.84	56.77	60.70	68.56	45.96	50.46	54.96	63.97	41.89	46.74	51.58	61.26	37.58	42.79	47.99	58.39
19	64.31	67.07	69.82	75.85	50.84	54.62	58.40	65.97	43.98	48.28	52.60	61.21	39.96	44.58	49.19	58.43	35.73	40.67	45.61	55.51
20	62.61	65.28	67.95	73.30	48.99	52.63	56.28	63.56	42.16	46.29	50.42	58.63	38.18	42.61	47.02	55.85	34.04	38.75	43.67	52.90
21	60.98	63.58	66.19	71.39	47.27	50.78	54.30	61.33	40.49	44.45	48.42	56.36	36.58	40.81	45.04	53.49	32.51	37.01	41.51	50.42
22	59.44	61.98	64.51	69.58	45.66	49.06	52.45	59.24	38.94	42.76	46.57	54.21	35.10	39.15	43.21	51.32	31.11	35.42	39.72	48.33
23	57.97	60.44	62.91	67.85	44.16	47.45	50.73	57.30	37.51	41.18	44.86	52.22	33.71	37.63	41.53	49.33	29.83	33.96	38.08	46.34
24	56.57	58.99	61.40	66.22	42.76	45.94	49.12	55.48	36.18	39.72	43.27	50.36	32.46	36.21	39.97	47.47	28.65	32.61	36.57	44.50

INVESTMENT TABLE.

The following table shows the rate per cent. of annual income from bonds bearing 5, 6, 7, or 8 per cent. interest, and costing from 40 to 125, the par value of the bonds being 100.

BUYING PRICE.	5 PER CENT.	6 PER CENT.	7 PER CENT.	8 PER CENT.
40	12.50	15.00	17.50	20.00
41	12.20	14.64	17.08	19.52
42	11.90	14.28	16.66	19.04
43	11.63	13.95	16.28	18.61
44	11.36	13.63	15.90	18.18
45	11.11	13.32	15.56	17.78
46	10.86	13.04	15.21	17.39
47	10 63	12.77	14.90	17.02
48	10.41	12.50	14.53	16.66
49	10.20	12.25	14.29	16.33
50	10.00	12.00	14.00	16.00
51	9.80	11.76	13.72	15.68
52	9.61	11 53	13.46	15.38
53	9.43	11.32	13.20	15.09
54	9.25	11.11	12.96	15.81
55	9.09	10.90	12.72	14.54
56	8.92	10.70	12.50	14.28
57	8.77	10.52	12.27	14.03
58	8.62	10.34	12.06	13.79
59	8.47	10.16	11.86	13.55
60	8.33	10.00	11.66	13.33
61	8.19	9.83	11.47	13.11
62	8.06	9.67	11.29	12.90
63	7.93	9.52	11.11	12.69
64	7.81	9.37	10.93	12.50
65	7.69	9.23	10.76	12.30
66	7.57	9.09	10.60	12.12
67	7.46	8.95	10.44	11.94
68	7.35	8.82	10.29	11.76
69	7.24	8.69	10.14	11.50
70	7.14	8 57	10.00	11.43
71	7.04	8.45	9.85	11.26
72	6 94	8.33	9.72	11.11
73	6.84	8.21	9.58	10.95
74	6.75	8.10	9.45	10.80
75	6.66	8.00	9.33	10.66
76	6 57	7.89	9.21	10.52
77	6 49	7.79	9.00	10.38
78	6.41	7.69	8.97	10.25
79	6.32	7·59	8.86	10.12
80	6.25	7.50	8.75	10.00
81	6.17	7.40	8.64	9.87
82	6.09	7.31	8.53	9.75
83	6.02	7.22	8.43	9.63
84	5.95	7.14	8.33	9.52
85	5.88	7.05	8.23	9.41
86	5.81	6.97	8.13	9.30
87	5.74	6.89	8.04	9.19
88	5.68	6.81	7.94	9.09
89	5.61	6.74	7.86	8.98
90	5.55	6.66	7.77	8.88

Investment Table—Continued.

BUYING PRICE.	5 PER CENT.	6 PER CENT.	7 PER CENT.	8 PER CENT.
91	5.49	6.59	7.69	8.79
92	5.43	6.52	7.60	8.69
93	5.37	6.45	7.52	8.60
94	5.31	6.38	7.44	8.51
95	5.26	6.31	7.36	8.42
96	5.20	6.25	7.29	8.33
97	5.15	6.18	7.21	8.24
98	5.10	6.12	7.14	8.16
99	5.05	6.06	7.07	8.08
100	5.00	6.00	7.00	8.00
101	4.95	5.94	6.93	7.92
102	4.90	5.88	6.86	7.84
103	4.85	5.82	6.79	7.76
104	4.80	5.76	6.72	7.69
105	4.76	5.71	6.66	7.61
106	4.71	5.66	6.60	7.54
107	4.67	5.60	6.54	7.47
108	4.62	5.55	6.48	7.40
109	4.58	5.50	6.42	7.33
110	4.54	5.45	6.36	7.27
111	4.50	5.40	6.30	7.20
112	4.46	5.35	6.25	7.14
113	4.42	5.30	6.19	7.07
114	4.38	5.26	6.14	7.01
115	4.35	5.21	6.08	6.95
116	4.31	5.17	6.03	6.89
117	4.27	5.12	5.98	6.83
118	4.23	5.08	5.93	6.77
119	4.20	5.04	5 88	6.72
120	4.16	5.00	5.83	6.66
121	4.13	4.95	5.78	6.61
122	4.09	4.91	5.73	6.55
123	4.06	4.87	5.69	6.50
124	4.03	4.83	5.65	6.45
125	4.00	4.80	5.60	6.40

Falling Bodies.

The space that a body will fall through in one second is 16 feet 1 inch. Remembering this quantity it is easy to find how far a body will fall in any given time. In the first second it falls 1 time this quantity; in the second second, 3 times; in the third second, 5 times, etc. In other words, multiply 16 feet 1 inch (16.083 feet) by one of the odd numbers, 1, 3, 5, 7, 9, etc. The whole space through which a body falls in a given time may be found by multiplying the square of the time by 16.083. Thus the space fallen through in 5 seconds would be

$$5 \times 5 \times 16.083 = 402 \text{ ft. } 2\frac{1}{2} \text{ in.}$$

Table showing the time occupied, the velocity required, and the dynamic effect (expressed in pounds of static pressure) produced by a solid compact body weighing one pound, falling freely from rest by the force of gravity.

HEIGHT FEET.	HEIGHT INCHES.	TIME IN SECONDS.	VELOCITY IN FEET.	PRESSURE IN POUNDS.
0	1	.072	2 309	10.248
0	2	.102	3.266	14.493
0	3	.125	4.000	17.750
0	4	.144	4.619	20.496
0	5	.161	5.164	22.915
0	6	.177	5.657	25.102
0	7	.191	6.110	27.114
0	8	.204	6.532	28.986
0	9	.216	6.928	30.744
0	10	.228	7.303	32.407
0	11	.239	7.659	33.989
1	0	.250	8.000	35.500
1	1	.260	8.327	36.950
1	2	.270	8.641	38.344
1	3	.279	8.944	39.690
1	4	.288	9.238	40.992
1	5	.297	9.522	42.253
1	6	.306	9.798	43.479
1	7	.314	10.066	44.670
1	8	.323	10.328	45.830
1	9	.330	10.583	46.962
1	10	.338	10.832	48.067
1	11	.346	11.075	49.148
2	0	.353	11.314	50.205
2	1	.361	11.547	51.240
2	2	.368	11.776	52.255
2	3	.375	12.000	53.250
2	4	.382	12.220	54.227
2	5	.389	12.436	55.187
2	6	.395	12.649	56.130
2	7	.402	12.858	57.058
2	8	.408	13.064	57.971
2	9	.414	13.266	58.870
2	10	.421	13.466	59.755
2	11	.427	13.663	60.628
3	0	.433	13.856	61.488

The principles upon which this table has been computed are:

Solid compact bodies fall through the same space in the same time, whatever may be their weight.

The spaces through which they fall in different times, are as the squares of those times.

The distance through which they fall the first second of time is 16 feet.

The velocity acquired during any length of time, is at the rate of 32 feet for each second.

The dynamic effect produced by a body weighing one pound falling from rest through one foot, is equal to 35.5 pounds static pressure.

The effects produced by bodies of different weights and moving with different velocities, are directly as the respective products of the weights by their respective velocities.

Capacities of Boxes. of Given Dimensions.

In the following table the dimensions given are for the *inside* of the box. A box

15″ × 14″ × 11″	will contain	10 gallons.
8¼″ × 7″ × 4″	" "	1 gallon.
4″ × 4″ × 3.61″	" "	1 quart.
24″ × 28″ × 16″	" "	5 bushels.
16″ × 12″ × 11.2″	" "	1 "
12″ × 11.2″ × 8″	" "	½ "
7″ × 6.4″ × 12″	" "	1 peck.
8.4″ × 8″ × 4″	" "	½ "

1 gallon contains 231 cubic inches.
1 bushel " 2150.42 " "

Table of Foreign Coins.

COUNTRY.	STANDARD.	MONETARY UNIT.	VALUE IN U. S. MONEY.	
			CTS.	MILLS.
Argentine Republic	Double	Peso	$0.96	5
Austria	Single silver	Florin	.33	6
Belgium	Double	Franc	.19	3
Bolivia	Single silver	Boliviano	.68	
Brazil	Single gold	Milreis of 1,000 reis	.54	6
British N. Amer.	Single gold	Dollar	1.00	
Chili	Double	Peso	.91	2
Cuba	Double	Peso	.92	6
Denmark	Single gold	Crown	.26	8
Equador	Single silver	Sucre	.68	
Egypt	Single gold	Pound (100 piastres)	4.94	3
France	Double	Franc	.19	3
German Empire	Single gold	Mark	.23	8
Great Britain	Single gold	Pound sterling	4.86	6½
Greece	Double	Drachma	.19	3
Gautemala	Single silver	Peso	.68	
Hayti	Double	Gourde	.96	5
Honduras	Single silver	Peso	.68	
India	Single silver	Rupee of 16 annas	.32	3
Italy	Double	Lira	.19	3
Japan	Double	Yen { gold	.99	7
		Yen { silver	.73	4
Liberia	Single gold	Dollar	1.00	
Mexico	Single silver	Dollar	.73	9
Netherlands	Double	Florin	.40	2
Nicaragua	Single silver	Peso	.68	
Norway	Single gold	Crown	.26	8
Peru	Single silver	Sol	.68	
Portugal	Single gold	Milreis of 1,000 reis	1.08	
Russia	Single silver	Rouble of 100 kopecks	.54	4
Spain	Double	Peseta of 100 centimes	.19	3
Sweden	Single gold	Crown	.26	8
Switzerland	Double	Franc	.19	3
Tripoli	Single silver	Mahbub of 20 piastres	.61	4
Turkey	Single gold	Piastre	.04	4
U. S. Columbia	Single silver	Peso	.68	
Venezuela	Single silver	Bolivar	.13	6

NOTE.—The "Standard" of a given country is indicated as follows, namely: Double, when its standard silver coins are unlimited legal tender, the same as its gold coins; single gold or single silver, as its standard coins of one or the other metal are unlimited legal tender.

Cross Ties per Mile of Railroad Track.

CENTER TO CENTER.	NUMBER OF TIES.
1½ feet	3,520
1¾ "	3,017
2 "	2,640
2¼ "	2,348
2½ "	2,113
2¾ "	1,921
3 "	1,761

The length of rails as usually sold is 90 per cent. 30 feet long, and 10 per cent. 24 to 28 feet long, requiring 357 splice joints per mile.

Weight and Strength of Iron Chains.

Assuming 20 tons per square inch as the average breaking strain of a single straight bar of ordinary rolled iron, 1 inch in diameter; or 1 inch square; 19 tons, from 1 to 2 inches; and 18 tons from 2 to 3 inches. Chains of superior iron will require ¼ to ⅓ more to break them.

Diam. of rod of which links are made.	Weight of chain per foot run.	Breaking strain of the chain.		Diam. of rod of which links are made.	Weight of chain per foot run.	Breaking strain of the chain.	
Inches.	Pounds	Pounds.	Tons.	Inches.	Pounds.	Pounds.	Tons.
3/16	.325	1,731	.773	1	9.26	49,280	22.00
1/4	.579	3,069	1.37	1 1/8	11.7	59,226	26.44
5/16	.904	4,794	2.14	1 1/4	14.5	73,114	32.64
3/8	1.30	6,922	3.09	1 3/8	17.5	88,301	39.42
7/16	1.78	9,408	4.20	1 1/2	20.8	105,280	47.00
1/2	2.31	12,320	5.50	1 5/8	24.4	123,514	55.14
9/16	2.93	15,590	6.96	1 3/4	28.4	143,293	63.97
5/8	3.62	19,219	8.58	1 7/8	32.6	164,505	73.44
11/16	4.38	23,274	10.39	2	37.0	187,152	83.55
3/4	5.21	27,687	12.36	2 1/4	46.9	224,448	100.2
13/16	6.11	32,301	14.42	2 1/2	57.9	277,088	123.7
7/8	7.10	37,632	16.80	2 3/4	70.0	335,328	149.7
15/16	8.14	43,277	19.32	3	83.3	398,944	178.1

Short Link Chain.

SIZE.	AVERAGE WT. PER 100 FT.	PROOF.	SIZE.	AVERAGE WT. PER 100 FT.	PROOF.
INCHES.	POUNDS.	TONS.	INCHES.	POUNDS.	TONS.
3/16	50	¼	7/8	790	11
1/4	90	5/8	15/16	900	12½
5/16	122	1⅛	1	1020	14¼
3/8	160	2	1 1/16	1150	16
7/16	200	2½	1⅛	1270	18
½	250	3½	1 3/16	1420	20
9/16	320	4½	1¼	1580	22
5/8	420	5½	1 5/16	1720	24
11/16	500	6¾	1⅜	1880	26
¾	590	8	1 7/16	2050	28
13/16	670	9½	1½	2220	30

Proofs and Weights of Chain.

SIZE OF CHAIN.	WEIGHT PER FATHOM.		TEST IN TONS.	
	PROVED.	STUD.	PROVED.	STUD.
3/16	3¼		½	
¼	4½		¾	
5/16	6		1⅛	
⅜	10		1⅝	
7/16	12		2¼	
½	15		3	4
9/16	19		3¾	5
⅝	25		4⅝	6
11/16	30		5⅝	8½
¾	35	33	6¾	10
13/16	40	38	7⅞	12
⅞	48	43	9⅛	13¾
15/16	54	50	10½	15¾
1	64	62	12	18
1 1/16	70	69	13½	20 3/10
1⅛	75	74	15¼	22¾
1 3/16	82	80	17	25½
1¼	96	90	18¾	28 1/10
1 5/16	99	97	20½	31
1⅜	110	107	22⅝	34
1 7/16	118	110	24½	37 2/10
1½	130	125	27	40½
1 9/16	138	133	29½	44
1⅝	156	145	31⅝	47½
1 11/16		152		51 2/10
1¾		165		55 1/10
1 13/16		179		59 1/10
1⅞		195		63¼
1 15/16		209		67½
2		225		72
2 1/16		250		76½
2⅛		280		81¼
2¼		325		91 1/10

Cleveland Coil and Cable Chain.

SIZE.	AVERAGE WEIGHT PER FATHOM IN POUNDS.		PROOF.	SHIP'S TONAGE.	SIZE OF ANCHOR IN POUNDS.
INCHES.	STUD LINK.	SHORT LINK	TONS.		
3/16	.....	3½	¼	.....	.....
¼	.....	5½	½	.....	.....
5/16	.....	6¼	1¼	.....	.....
⅜	.....	9	2½	.....	.....
7/16	.....	12½	3	.....	.....
½	.....	15	4	30	150
9/16	.....	19	5	50	200
⅝	.....	25	6	75	300
11/16	....	30	8	95	400
¾	33	35	10	100	500
13/16	38	40	12	110	600
⅞	43	47	14	130	700
15/16	50	54	16	160	800
1	57	60	18	200	900
1⅛	71	74	23	280	1300
1¼ to 2	83	90	28	360	1600

CHIMNEYS.

The following table is based on the supposition that a commercial horse-power requires, as an average, the consumption of five pounds of coal per hour:

Sizes of Chimneys, with Approximate Horse-Power of Boilers.

DIAMETER IN INCHES.	HEIGHT OF CHIMNEYS AND COMMERCIAL HORSE-POWER.											SIDE OF SQUARE INCHES.	EFFECTIVE AREA SQUARE FT.	ACTUAL AREA SQUARE FT.
	50 ft.	60	70	80	90	100	110	125	150	175	200			
18	23	25	27									16	0.97	1.77
21	35	38	41									19	1.47	2.41
24	49	54	58	62								22	2.08	3.14
27	65	72	78	83								24	2.78	3.98
30	84	92	100	107	113							27	3.58	4.91
33		115	125	133	141							30	4.48	5.94
36		141	152	163	173	182						32	5.47	7.07
39			183	196	208	219						35	6.57	8.30
42			216	231	245	258	271					38	7.76	9.62
48				311	330	348	365	389				43	10.44	12.57
54				363	427	449	472	503	551			48	13.51	15.90
60				505	536	565	593	632	692	748		54	16.98	19.64
66					658	694	728	776	849	918	981	59	20.83	23.76
72					792	835	876	934	1023	1105	1181	64	25.08	28.27
78						995	1038	1107	1212	1310	1400	70	29.73	33.18
84						1163	1214	1294	1418	1531	1637	75	34.76	38.48
90						1344	1415	1496	1639	1770	1893	80	40.19	44.18
96						1537	1616	1720	1876	2027	2167	86	46.01	50.27

Proportions for Chimneys.

Height of Chimney in Feet.	Pounds of Coal Burned per Hour per Square Foot of Area at Top of Chimney.	Height in Inches of Column of Water Balanced by the Draught Pressure	Horse-Power of each Square Foot of Chimney Assuming 7 Lbs. of Coal per Horse-Power.	Area of Top of Chimney in Feet per Horse-Power for 1 or 2 Boilers.	Area of Top of Chimney in Feet per Horse-Power for Several Boilers.	Area of Flue in Feet per Horse-Power.
30	78.14	.218	7.3	.146	.091	.182
40	90.25	.296	8.4	.126	.077	.155
50	101.01	.364	9.4	.113	.070	.140
60	110.65	.437	10.3	.103	.064	.129
70	119.52	.5	11.2	.095	.059	.119
80	127.77	.58	11.9	.089	.055	.111
90	135.52	.656	12.6	.084	.052	.105
100	142.85	.729	13.3	.08	.05	.100
125	159.71	.911	14.9	.071	.044	.089
150	174.96	1.09	16.3	.065	.04	.082
175	188.98	1.26	17.6	.060	.038	.075
200	202.03	1.45	18.8	.056	.035	.07
225	214.28	1.64	20.	.053	.033	.066
250	225.87	1.82	21.	.05	.031	.063
275	236.90	1.99	22.	.048	.03	.06
300	247.43	2.18	23.	.046	.028	.057

Each pound of coal burned yields from 13 to 30 pounds of gas, the volume of which varies with the temperature.

The intensity of draft required varies with the kind and condition of the fuel, and the thickness of the fires.

Wood requires the least and fine coal or slack the most draft. Anthracite coal slack requires a draft of 1¼ inches of water. The lower grades of fuel cannot be burned to advantage with a chimney much less in height than 100 feet.

A round chimney is better than a square one, and a straight flue is better than a tapering.

The external diameter of a chimney at the base should be one-tenth of the height. The batter should be from $\frac{1}{16}$ to ¼ inch to the foot on each side. A chimney should be 8 or 9 inches thick for 25 feet down from the top, and should increase 4 inches in thickness for every 25 feet down to the base. If the inside diameter exceeds 5 feet, the top thickness should be 12 inches, or 13 inches for 25 feet down from the top. If the inside diameter is under 3 feet, then the top may be 4 or 4½ inches thick for 10 feet down.

To Find the Horse-Power of Chimney or Smoke Stack with Natural Draft.

RULE: Find the cross sectional area of chimney or stack at its top, and multiply this by 10. Then multiply this product by the co-efficient, found in table, corresponding to the given height of chimney or stack. The product will be the horse-power of chimney or stack.

Height of chimney	10	20	30	40	50	60
Co-efficient	0.5	0.67	0.8	0.91	1 00	1.08
Height of chimney	80	100	140	200	300	400
Co-efficient	1.23	1.36	1.58	1.86	2.23	2 55

A stack 50 feet high above grate should have a draught with gases at 612 degrees Fah. and external air 62 degrees, about .375 inches of water. This result is found by multiplying height of chimney by the constant .0075. The power of boilers is much increased by a forced draught, the comparative efficiency being as follows:

With Natural Draught = 1.
" Jet " = 1.25
" Blast " = 1.6

TABLE OF AREAS OF CYLINDERS.

Advancing by One-half Inches From Six to Twenty-Four Inches.

DIAMETER CYLINDER IN INCHES.	AREA CYLINDER IN SQUARE INCHES.	DIAMETER CYLINDER IN INCHES.	AREA CYLINDER IN INCHES.
6	28.274	15	176.715
6½	33.183	15½	188.692
7	38.484	16	201.062
7½	44.178	16½	213.825
8	50.265	17	226.980
3½	56.745	17½	240.528
9	63.617	18	254.469
9½	70.882	18½	268.803
10	78.540	19	283.529
10½	86.590	19½	298.648
11	95.033	20	314.160
11½	103.869	20½	330.064
12	113.097	21	346.361
12½	122.718	21½	363.051
13	132.732	22	380.133
13½	143.139	22½	397.608
14	153.938	23	415.476
14½	165.130	23½	433.737
		24	452.390

These areas are found by multiplying the square of the diameter by .7854.

CYLINDERS.

Table of Contents in Cub. Feet, and in U. S. Gallons.

Of 231 cub. ins. (or 7.4805 gallons to a cub. ft.); and for one foot of length of the cylinder. For the contents for a greater diam. than any in the table, take the quantity opposite one-*half* said diam.; and multiply it by 4. Thus, the number of cub. ft. in one ft. length of a pipe 80 inches in diam. is equal to $8.728 \times 4 = 34.912$ cub. ft. So also with gallons, and areas.

Diam. in Ins.	Diam. in decimals of a foot.	FOR 1 FT. IN LENGTH. Cub. Feet. Also area in sq. ft.	FOR 1 FT. IN LENGTH. Gallons of 231 Cub. Ins.	Diam. in Ins.	Diam. in decimals of a foot.	FOR 1 FT. IN LENGTH. Cub. Feet. Also area in sq. ft.	FOR 1 FT. IN LENGTH. Gallons of 231 Cub. Ins.	Diam. in Ins.	Diam. in decimals of a foot.	FOR 1 FT. IN LENGTH. Cub. Feet. Also area in sq. ft.	FOR 1 FT. IN LENGTH. Gallons of 231 Cub. Ins.
1/16	.0208	.0003	.0026	3/4	.5625	.2485	1.859	19.	1.583	1.969	14.73
1/16	.0260	.0005	.0040	7.	.5833	.2673	1.999	1/2	1.625	2.074	15.52
3/8	.0313	.0008	.0057	1/4	.6042	.2868	2.144	20	1.666	2.182	16.32
7/16	.0365	.0010	.0078	1/2	.6250	.3068	2 295	1/2	1.708	2.292	17.15
1/2	.0417	.0014	.0102	3/4	.6458	.3275	2.450	21.	1.750	2.405	17.99
9/16	.0469	.0017	.0129	8.	.6667	.3490	2.611	1/2	1.792	2.521	18.86
5/8	.0521	.0021	.0159	1/4	.6875	.3713	2.777	22.	1.833	2.640	19.75
11/16	.0573	.0026	.0193	1/2	.7083	.3940	2.948	1/2	1.875	2.761	20.65
3/4	.0625	.0031	.0230	3/4	.7292	.4175	3.125	23.	1.917	2.885	22.58
13/16	.0677	.0036	.0270	9.	.7500	.4418	3.305	1/2	1.958	3.012	21.53
7/8	.0729	.0042	.0312	1/4	.7708	.4668	3.492	24.	2.000	3.142	23 50
15/16	.0781	.0048	.0359	1/2	.7917	.4923	3.682	25.	2.083	3.409	25.50
1.	.0833	.0055	.0408	3/4	.8125	.5185	3.879	26.	2.166	3.687	27.58
1/4	.1042	.0085	.0638	10.	.8333	.5455	4.031	27.	2.250	3.976	29.74
1/2	.1250	.0123	.0918	1/4	.8542	.5730	4.286	28.	2.333	4.276	31.99
3/4	.1458	.0168	.1250	1/2	.8750	.6013	4.498	29.	2.416	4.587	34.31
2.	.1667	.0218	.1632	3/4	.8958	.6303	4.714	30.	2.500	4.909	36.72
1/4	.1875	.0276	.2066	11.	.9167	.6600	4.937	31.	2.583	5.241	39.21
1/2	.2083	.0341	.2550	1/4	.9375	.6903	5.163	32.	2.666	5.585	41.78
3/4	.2292	.0413	.3085	1/2	.9583	.7213	5.395	33.	2.750	5.940	44.43
3.	.2500	.0491	.3673	3/4	.9792	.7530	5.633	34.	2.833	6.305	47.17
1/4	.2708	.0576	.4310	12.	1 Foot.	.7854	5.876	35.	2.916	6.681	49.98
1/2	.2917	.0668	.4998	1/2	1.042	.8523	6.375	36.	3.000	7.069	52.88
3/4	.3125	.0767	.5738	13.	1.083	.9218	6.895	37.	3.083	7.468	55.86
4.	.3333	.0883	.6528	1/2	1.125	.9940	7.435	38.	3.166	7.876	58.92
1/4	.3542	.0985	.7370	14.	1.167	1.069	7.997	39.	3.250	8.296	62.06
1/2	.3750	.1105	.8263	1/2	1.208	1.147	8.578	40.	3.333	8.728	65.20
3/4	.3958	.1231	.9205	15.	1.250	1.227	9.180	41.	3.416	9.168	68.58
5.	.4167	.1364	1.020	1/2	1.292	1.310	9.801	42.	3.500	9.620	71.96
1/4	.4375	.1503	1.124	16.	1.333	1.396	10.44	43.	3.583	10.084	75.43
1/2	.4583	.1650	1.234	1/2	1.375	1.485	11.11	44.	3.666	10.560	79.00
3/4	.4792	.1803	1.349	17.	1.417	1.576	11.79	45.	3.750	11.044	82.62
6.	.5000	.1963	1.469	1/2	1.458	1.670	12.50	46.	3.833	11.540	86.32
1/4	.5208	.2130	1.594	18.	1.500	1.767	13.22	47.	3.916	12.048	90.12
1/2	.5417	.2305	1.724	1/2	1.542	1.867	13.97	48.	4.000	12.566	94.02

TABLE OF GALLONS.

	Cubic inches. in a gallon.	Weight of a Gallon in pounds Avoirdupois.	Gallons in a cubic foot.	Weight of a cubic foot of water, English standard, 62.3210286 pounds Avoirdupois.
United States	231.	8.33111	7.480519	
New York	221.81918	8.00	7.901285	
Imperial	277.274	10.00	6.232102	

WEIGHT OF CASTINGS BY WEIGHT OF PATTERNS.

Weight of pattern, white pine, x 16.....gives weight in cast iron.
Weight of pattern, white pine, x 17.1..... " " " wrought iron.
Weight of pattern, white pine, x 17.3..... " " " steel.
Weight of pattern, white pine, x 18..... " " " copper.
Weight of pattern, white pine, x 25..... " " " lead.

Shrinkage of Castings.

Cast iron, 1/8 inch per lineal foot.
Brass, 3/16 inch per lineal foot.
Lead, 1/8 inch per lineal foot.
Tin, 1 1/2 inch per lineal foot.
Zinc, 5/16 inch per lineal foot.

A PATTERN WEIGHING ONE POUND AND MADE OF	WILL WEIGH WHEN CAST IN.				
	CAST IRON.	ZINC.	COPPER.	YELLOW BRASS.	GUN METAL.
	Lbs.	Lbs.	Lbs.	Lbs.	Lbs.
Mahogany	8	8	10	9.8	10
Mahogany (St. Domingo)	10	9.5	12	11½	12
Maple	10	9.8	12½	12	12.4
Beech	11	11	14	13.4	13.8
Cedar	11½	11.4	14½	14	14½

CIRCUMFERENCE AND AREAS OF CIRCLES.

DIAM.	CIRC.	AREA.	DIAM.	CIRC.	AREA.	DIAM.	CIRC.	AREA.
1/32 —	.0981	.00076	7½ —	23.56	44.178	16 —	50.26	201.06
	.1963	.00306		23.95	45.663		50.65	204.21
1/16	.3926	.01227	7¾ -	24.34	47.173	16¼ -	51.05	207.39
3/16	.5890	.02761		24.74	48.707		51.44	210.59
¼ —	.7854	.04908	8 —	25.13	50.265	16½ —	51.83	213.82
	.9817	.07669		25.52	51.848		52.22	217.07
5/16	1.178	.1104	8¼ -	25 91	53.456	16¾ -	52.62	220.35
7/16	1.374	.1503		26.31	55.088		53.01	223.65
½ —	1.570	.1963	8½ —	26.70	56.745	17 —	53.40	226.98
9/16	1.767	.2485		27.09	58.426		53.79	230.33
5/8 -	1.963	.3067	8¾ -	27.48	60.132	17¼ -	54.19	233.70
11/16	2.159	.3712		27.88	61.862		54.58	237.10
¾ —	2.356	.4417	9 —	28.27	63.617	17½ —	54.97	240.52
13/16	2.552	.5184		28.66	65.396		55.37	243.97
⅞ -	2.748	.6013	9¼ -	29.05	67.200	17¾ -	55.76	247.45
15/16	2.945	.6902		29.45	69.029		56.16	250.94
1 —	3.141	.7854	9½ —	29.84	70.882	18 —	56.54	254.46
	3.534	.9940		30.23	72.759		56.94	258.01
1¼ -	3.927	1.227	9¾ -	30.63	74.662	18¼ -	57.33	261.58
	4.319	1.484		31.02	76.588		57.72	265.18
1½ —	4.712	1.767	10 —	31.41	78.539	18½ —	58.11	268.80
	5.105	2.073		31.80	80.515		58.51	272.44
1¾ -	5.497	2.405	10¼ -	32.20	82.516	18¾ -	58.90	276.11
	5.890	2.761		32.59	84.540		59.29	279.81
2 —	6.283	3.141	10½ —	32.98	86.590	19 —	59.69	283.52
	6.675	3.546		33.37	88.664		60.08	287.27
2¼ -	7.068	3.976	10¾ -	33.77	90.762	19¼ -	60.47	291.03
	7.461	4.430		34.16	92.885		60.86	294.83
2½ —	7.854	4.908	11 —	34.55	95.033	19½ —	61.26	298.64
	8.246	5.411		34.95	97.205		61.65	302.48
2¾ -	8.639	5.939	11¼ -	35.34	99.402	19¾ -	62.04	306.35
	9.032	6.491		35.73	101.62		62.43	310.24
3 —	9.424	7.068	11½ —	36.12	103.86	20 —	62.83	314.16
	9.817	7.669		36.52	106.13		63.22	318.09
3¼ -	10.21	8.295	11¾ -	36.91	108.43	20¼ -	63.61	322.06
	10.60	8.946		37.30	110.75		64.01	326.05
3½ —	10.99	9.621	12 —	37.69	113.09	20½ —	64.40	330.06
	11.38	10.320		38.09	115.46		64.79	334.10
3¾ -	11.78	11.044	12¼ -	38.48	117.85	20¾ -	65.18	338.16
	12.17	11.793		38.87	120.27		65.58	342.25
4 —	12.56	12.566	12½ —	39.27	122.71	21 —	65.97	346.36
	12.95	13.364		39.66	125.18		66.36	350.49
4¼ -	13.35	14.186	12¾ -	40.05	127.67	21¼ -	66.75	354.65
	13.74	15.033		40.44	130.19		67.15	358.84
4½ —	14.13	15.904	13 —	40.84	132.73	21½ —	67.54	363.05
	14.52	16.800		41.23	135.29		67.93	367.28
4¾ -	14.92	17.720	13¼ -	41.62	137.88	21¾ -	68.32	371.54
	15.31	18.665		42.01	140.50		68.72	375.82
5 —	15.70	19.635	13½ —	42.41	143.13	22 —	69.11	380.13
	16.10	20.629		42.80	145.80		69.50	384.46
5¼ -	16.49	21.647	13¾ -	43.19	148.48	22¼ -	69.90	388.82
	16.88	22.690		43.58	151.20		70.29	393.20
5½ —	17.27	23.758	14 —	43.98	153.93	22½ —	70.68	397.60
	17.67	24.850		44.37	156.69		71.07	402.03
5¾ -	18.06	25.967	14¼ -	44.76	159.48	22¾ -	71.47	406.49
	18.45	27.108		45.16	162.29		71.86	410.97
6 —	18.84	28.274	14½ —	45.55	165.13	23 —	72.25	415.47
	19.24	29.464		45.94	167.98		72.64	420.00
6¼ -	19.63	30.679	14¾ -	46.33	170.87	23¼ -	73.04	424.55
	20.02	31.919		46.73	173.78		73.43	429.13
6½ —	20.42	33.183	15 —	47.12	176.71	23½ —	73.82	433.73
	20.81	34.471		47.51	179.67		74.21	438.30
6¾ -	21.20	35.784	15¼ -	47.90	182.65	23¾ -	74.61	443.01
	21.57	37 122		48.30	185.66		75.00	447.69
7 —	21.99	38.484	15½ —	48.69	188.69	24 —	75.39	452.39
	22.38	39.871		49.08	191.74		75.79	457.11
7¼ -	22.77	41.282	15¾ -	49.48	194.82	24¼ -	76.18	461.86
	23.16	42.718		49.87	197.93		76.57	466.63

Circumferences and Areas of Circles—*Continued.*

DIAM.	CIRC.	AREA.	DIAM.	CIRC.	AREA.	DIAM.	CIRC.	AREA.
24½	76.96	471.43	33	103.6	855.30	41½	130.3	1352.6
	77.36	476.25		104.0	861.79		130.7	1360.8
24¾	77.75	481.10	33¼	104.4	868.40	41¾	131.1	1369 0
	78.14	485.97		104.8	874.84		131.5	1377.2
25	78.54	490.87	33½	105.2	881.41	42	131.9	1385.4
	78.93	495.76		105.6	888.00		132.3	1393.7
25¼	79.32	500.74	33¾	106.0	894.61	42¼	132.7	1401.9
	79.71	505.71		106.4	901.25		133.1	1410.2
25½	80.10	510.70	34	106 8	907.92	42½	133.5	1418.6
	80.50	515.72		107.2	914.61		133.9	1426.9
25¾	80.89	520.70	34¼	107.5	921 32	42¾	134.3	1435.3
	81.28	525.83		107.9	928 06		134 6	1443.7
26	81.68	530.93	34½	108.3	934.82	43	135 0	1452.2
	82.07	536.04		108.7	941.60		135.4	1460.6
26¼	82.46	541.18	34¾	103.1	948.41	43¼	135 8	1469.1
	82.85	546.35		109.5	955.25		136.2	1477.6
26½	83.25	551.54	35	109 9	962.11	43½	136.6	1486.1
	83.64	556.76		110.3	968.99		137.0	1494.7
26¾	84.03	562.00	35¼	110.7	975.90	43¾	137.4	1503.3
	84.43	567.26		111.1	982.84		137.8	1511.9
27	84.82	572.55	35½	111.5	989.80	44	138.2	1520.5
	85.21	577.87		111.9	996.78		138.6	1529.1
27¼	85.6)	583.20	35¾	112 3	1003.7	44¼	139.0	1537.8
	86.00	588.57		112.7	1010.8		139.4	1546.5
27½	86.39	593.95	36	113.0	1017.8	44½	139.8	1555.2
	86.78	599.37		113.4	1024.9		140.1	1564.0
27¾	87.17	604.80	36¼	113.8	1032.0	44¾	140.5	1572.8
	87.57	610.26		114.2	1039.1		140.9	1581.6
28	87.96	615.75	36½	114.6	1049.3	45	141.3	1590.4
	88.35	621.26		115·0	1053.5		141.7	1599.2
28¼	88.75	626.79	36¾	115.4	1060.7	45¼	142.1	1608.1
	89.14	632.35		115.8	1067.9		142.5	1617.0
28½	89.53	637.94	37	116.2	1075.2	45½	142.9	1625.9
	89.92	643.54		116.6	1082.4		143.3	1634.9
28¾	90.32	649.18	37¼	117.0	1089.7	45¾	143.7	1643.8
	90.71	654.83		117.4	1097.1		144.1	1652.8
29	91.10	660.52	37½	117.8	1104.4	46	144.5	1661.9
	91.49	666.22		117.2	1111.8		144.9	1670.9
29¼	91.89	671.95	37¾	118.6	1119.2	46¼	145.4	1680.0
	92.28	677.71		118.9	1126.6		145.6	1689.1
29½	92.67	683.49	38	119.3	1134.1	46½	146.0	1698.2
	93.06	689.29		119.7	1141.5		146.4	1707.3
29¾	93.46	695.12	38¼	120.1	1149.0	46¾	146.8	1716.5
	93.85	700.98		120.5	1156.6		147.2	1725.7
30	94.24	706.86	38½	120.9	1164.1	47	147.6	1734.9
	94.64	712 76		121.3	1171.7		148.0	1744.1
30¼	95.03	718.69	38¾	121 7	1179.3	47¼	148.4	1753.4
	95.42	724.64		122.1	1186.9		148.8	1762.7
30½	95.81	730.61	39	122.5	1194.5	47½	149.2	1772.0
	96.21	736.61		122.9	1202.2		149.6	1781.3
30¾	96.60	742.64	39¼	123.3	1209.9	47¾	150.0	1790.7
	96.99	748.69		123.7	1217.6		150.4	1800.1
31	97.38	754.76	39½	124.0	1225.4	48	150.7	1809.5
	97.78	760.86		124.4	1233.1		150.1	1818.9
31¼	98.17	766.99	39¾	124.8	1240.9	48¼	151.5	1828.4
	98.56	773.14		125.2	1248.7		151.9	1837.9
31½	98.96	779.31	40	125.6	1256.6	48½	152.3	1847.4
	99.35	785.51		126.0	1264.5		152.7	1856.9
31¾	99.74	791.73	40¼	126.4	1272.3	48¾	153.1	1866.5
	100.1	797.97		126.8	1280.3		153.5	1876.1
32	100.5	804.23	40½	127.3	1288.2	49	153.9	1885.7
	100.9	810.54		127.6	1296.2		154.3	1895.3
32¼	101.3	816.86	40¾	128.0	1304.2	49¼	154.7	1905.0
	101.7	823.21		128.4	1312.2		155.1	1914.7
32½	102.1	829.57	41	128.8	1320 2	49½	155 5	1824.4
	102.4	835.97		129.1	1328.3		155.9	1934.1
32¾	102.8	842.39	41¼	129.5	1336.4	49¾	156 2	1943.9
	103.2	848.83		129.9	1344.5		156.6	1953.6

Circumferences and Areas of Circles—*Continued.*

DIAM.	CIRC.	AREA.	DIAM.	CIRC.	AREA.	DIAM.	CIRC.	AREA.
50 —	157.0	1963.5	58½ —	183.7	2687.8	67 —	210.4	3525.6
	157.4	1973.3		184.1	2699.3		210.9	3538.8
50¼ -	157.8	1983.1	58¾ -	184.5	2710.8	67¼ -	211.2	3552.0
	158.2	1993.0		184.9	2722.4		211.6	3565.2
50½ —	158.6	2002.9	59 —	185.3	2733.9	67½ —	212.0	3578.4
	159.0	2012.8		185.7	2745.5		212.4	3591.7
50¾ -	159.4	2022.8	59¼ -	186.1	2757.1	67¾ -	212.8	3605.0
	159.8	2032.8		186.5	2768.8		213.2	3618.3
51 —	160.2	2042.8	59½ —	186.9	2780.5	68 —	213.6	3631.6
	160.6	2052.8		187.3	2792.2		214.0	3645.0
51¼ -	161.0	2062.9	59¾ -	187.7	2803.9	68¼ -	214.4	3658.4
	161.3	2072.9		188.1	2815.6		214.8	3671.8
51½ —	161.7	2083.0	60 —	188.4	2827.4	68½ —	215.1	3685.2
	162.1	2093.2		188.8	2839.2		215.5	3698.7
51¾ -	162.5	2103.3	60¼ -	189.2	2851.0	68¾ -	215.9	3712.2
	162.9	2113.5		189.0	2862.8		216.3	3725.7
52 —	163 3	2123.7	60½ —	190.0	2874.7	69 —	216.7	3734.2
	163.7	2133.9		190.4	2886.6		217.1	3752.8
52¼ -	164.1	2144.1	60¾ -	190.8	2898.5	69¼ -	217.5	3766.8
	164.5	2154.4		191.2	2910.5		217.9	3780.0
52½ —	164.9	2164.7	61 —	191.6	2922.4	69½ —	218.3	3793.6
	165.3	2175.0		192.0	2934.4		218.7	3807.3
52¾ -	165.7	2185.4	61¼ -	192.4	2946.4	69¾ -	219.1	3821.0
	166.1	2195.7		192.8	2958.5		219.5	3834.7
53 —	166.5	2206.1	61½ —	193.2	2970.5	70 —	219.9	3848.4
	166.8	2216.6		193.6	2982.6		220.3	3862.2
53¼ -	167.2	2227.0	61¾ -	193.9	2994.7	70¼ -	220.6	3875.9
	167.6	2237.5		194.3	3006.9		221.0	3889.8
53½ —	168.0	2248.0	62 —	194.7	3019.0	70½ —	221.4	3903.6
	168.4	2258.5		195.1	3031.2		221.8	3917.4
53¾ -	168 8	2269.0	62¼ -	195.5	3043.4	70¾ -	222.2	3931.3
	169.2	2279.6		195.9	3055.7		222.6	3945.2
54 —	169.6	2290.2	62½ —	196.3	3067.9	71 —	223.0	3959.2
	170.0	2300.8		196.7	3080.2		223.4	3973.1
54¼ -	170.4	2311.4	62¾ -	197.1	3092.5	71¼ -	223.8	3987.1
	170.8	2322.1		197.5	3104.8		224.2	4001.1
54½ —	171.2	2332.8	63 —	197.9	3117.2	71½ —	224.6	4015.1
	171.6	2343.5		198.3	3129.6		225.0	4029.2
54¾ -	172.0	2354.2	63¼ -	198.7	3142.0	71¾ -	225.4	4043.2
	172.3	2365.0		199.0	3144.4		225.8	4067.3
55 —	172.7	2375.8	63½ —	199.4	3166.9	72 —	226.1	4071.5
	173.1	2386.6		199.8	3179.4		226.5	4085.6
55¼ -	173.5	2397.4	63¾ -	200.2	3191.9	72¼ -	226.9	4099.8
	173.9	2408.3		200.6	3204.4		227.3	4114.0
55½ —	174.3	2419.2	64 —	201.0	3216.9	72½ —	227.7	4128.2
	174.7	2430.1		201.4	3229.5		228.1	4142.5
55¾ -	175.1	2441.0	64¼ -	201.8	3242.1	72¾ -	228.5	4156.7
	175.5	2452.0		202.2	3254.8		228.9	4171.0
56 —	175.9	2463.0	64½ —	202.6	3267.4	73 —	229.3	4185.3
	176.3	2474.0		203.0	3280.1		229.7	4199.7
56¼ -	176.7	2485.0	64¾ -	203.4	3292.8	73¼ -	230.1	4214.1
	177.1	2496.1		203.8	3205.5		230.5	4228.5
56½ —	177.5	2507.1	65 —	204.2	3318.3	73½ —	230.9	4242.9
	177.8	2518.2		204.5	3331.0		231.3	4257.3
56¾ -	178.2	2529.4	65¼ -	204.9	3343.8	73¾ -	231.6	4271.8
	178.6	2540.5		205.3	3356.7		232.0	4286.3
57 —	179.0	2551.7	65½ —	205.7	3369.5	74 —	232.4	4300.8
	179.4	2562.9		206.1	3382.4		232.8	4315.3
57¼ -	179.8	2574.1	65¾ -	206.5	3395.3	74¼ -	233.2	4329.9
	180.2	2585.4		206.9	3408.2		233.6	4344.5
57½ —	180.6	2596.7	66 —	207.3	3421.2	74½ —	234.0	4359.1
	181.0	2608.0		207.7	3434.1		234.4	4373.8
57¾ -	181.4	2619.3	66¼ -	208.1	3447.1	74¾ -	234.8	4388.4
	181.8	2630.7		208.5	3460.1		235.2	4403.1
58 —	182.2	2642.0	66½ —	208.9	3473.2	75 —	235.6	4417.8
	182.6	2653.4		209.3	3486.3		236.0	4432.6
58¼ -	182.9	2664.9	66¾ -	209.7	3499.3	75¼ -	236.4	4447.3
	183.3	2676.3		210.0	3512·5		236.7	4462.1

CIRCUMFERENCES AND AREAS OF CIRCLES.—*Concluded.*

DIAM.	CIRC.	AREA.	DIAM.	CIRC.	AREA.	DIAM.	CIRC.	AREA.
75½ —	237.1	4476.9	84 —	263.8	5541.7	92½ —	290.5	6720.0
	237.5	4491.8		264.2	5558.2		290.9	6738.2
75¾ —	237.9	4506.6	84¼ —	264.6	5574.8	92¾ —	291.3	6756.4
	238.3	4521.5		265.0	5591.3		291.7	6776.4
76 —	238.7	4536.4	84½ —	265.4	5607.9	93 —	292.1	6792.9
	239.1	4551.4		265.8	5624.5		292.5	6811.1
76¼ —	239.5	4566.3	84¾ —	266.2	5641.1	93⅜ —	292.9	6829.4
	239.9	4581.3		266.6	5657.8		293.3	6847.8
76½ —	240.3	4596.3	85 —	267.0	5674.5	93½ —	293.7	6866.1
	240.7	4611.3		267.4	5691.2		294.1	6884.5
76¾ —	241.1	4626.4	85¼ —	267.8	5707.9	93¾ —	294.5	6902.9
	241.5	4641.5		268.2	5724.6		294.9	6921.3
77 —	241.9	4656.6	85½ —	268.6	5741.4	94 —	295.3	6939.7
	242.2	4671.7		268.9	5758.2		295.7	6958.2
77¼ —	242.6	4686.9	85¾ —	269.3	5775.0	94¼ —	296.0	6976.7
	243.0	4702.1		269.7	5791.9		296.4	6995.2
77½ —	243.4	4717.3	86 —	270.1	5808.8	94½ —	296.8	7013.8
	243.8	4732.5		270.5	5825.7		297.2	7032.3
77¾ —	244.2	4747.7	86¼ —	270.9	5842.6	94¾ —	297.6	7050.9
	244.6	4763.0		271.3	5859.5		298.0	7069.5
78 —	245.0	4778.3	86½ —	271.7	5876.5	95 —	298.4	7088.2
	245.4	4793.7		272.1	5893.5		298.8	7106.9
78¼ —	245.8	4809.0	86¾ —	272.5	5910.5	95¼ —	299.2	7125.5
	246.2	4824.4		272.9	5927.6		299.6	7144.3
78½ —	246.6	4839.8	87 —	273.3	5944.6	95½ —	300.0	7163.0
	247.0	4855.2		273.7	5961.7		300.4	7181.8
78¾ —	247.4	4870.7	87¼ —	274.1	5978.9	95¾ —	300.8	7200.5
	247.7	4886.1		274.4	5996.0		301.2	7219.4
79 —	248.1	4901.6	87½ —	274.8	6013.2	96 —	301.5	7238.2
	248.5	4917.2		275.2	6030.4		301.9	7257.1
79¼ —	248.9	4932.7	87¾ —	275.6	6047.6	96¼ —	302.3	7275.9
	249.3	4948.3		276.0	6064.8		302.7	7294.9
79½ —	249.7	4963.9	88 —	276.4	6082.1	96½ —	303.1	7313.8
	250.1	4979.5		276.8	6099.4		503 5	7332.8
79¾ —	250.5	4995.1	88¼ —	277.2	6116.7	96¾ —	303.9	7341.7
	250.9	5010.8		277.6	6134.0		304.3	7370.7
80 —	251.3	5026.5	88½ —	278.0	6151.4	97 —	304.7	7389.8
	251.7	5042.2		278.4	6168.8		305.1	7408.8
80¼ —	252.1	5058.0	88¾ —	278.8	6186.2	97¼ —	305.5	7427.9
	252.5	5073.7		279.2	6203.6		305.9	7447.0
80½ —	252.8	5089.5	89 —	279.6	6221.1	97½ —	306.3	7466.2
	253.2	5105.4		279.9	6238.6		306.6	7485.3
80¾ —	253.6	5121.2	89¼ —	280.3	6256.1	97¾ —	307.0	7504.5
	254.0	5137.1		280.7	6273.6		307.4	7523.7
81 —	254.4	5153.0	89½ —	281.1	6291.2	98 —	307.8	7542.9
	254.8	5168.9		281.5	6308.8		308.2	7562.2
81¼ —	255.2	5184.8	89¾ —	281.9	6326.4	98¼ —	308.6	7581.5
	255.6	5200.8		282.3	6344.0		309.0	7600.8
81½ —	256.0	5216.8	90 —	282.7	6361.7	98½ —	309.4	7620.1
	256.4	5232.8		283.1	6379.4		309.8	7639.4
81¾ —	256.8	5248.8	90¼ —	283.5	6397.1	98¾ —	310.2	7658.8
	257.2	5264.9		283.9	6414.8		310.6	7678.2
82 —	257.6	5281.0	90½ —	284.3	6432.6	99 —	311.0	7697.7
	258.0	5297.1		284.7	6450.4		311.4	7717.1
82¼ —	258.3	5313.2	90¾ —	285.1	6468.2	99¼ —	311.8	7736.6
	258.7	5329.4		285.4	6486.0		312.1	7756.1
82½ —	259.1	5345.6	91 —	285.8	6503.8	99½ —	312.5	7775.6
	259.5	5361.8		286.2	6521.7		312.9	7795.2
82¾ —	259.9	5378.0	91¼ —	286.6	6539.6	99¾ —	313.3	7814.7
	260.3	5394.3		287.0	6557.6		313.7	7834.3
83 —	260.7	5410.6	91½ —	287.4	6575.5	100 —	314.1	7853.6
	261.1	5426.9		287.8	6593.5		314.5	7853.9
83¼ —	261.5	5443.2	91¾ —	288.2	6611.5	100¼ —	314.9	7893.3
	261.9	5459.6		288.6	6629.5		315.3	7913.1
83½ —	262.3	5476.0	92 —	289.0	6647.6	100½ —	315.7	7932.7
	262.7	5492.4		289.4	6665.7		316.0	7942.4
83¾ —	263.1	5508.8	92¼ —	289.8	6683.8	100¾ —	316.4	7972.2
	263.5	5525.3		290.2	6701.9		316.8	7991.9

Areas and Circumferences of Circles.

For Diameters from 1-10 to 100, Advancing by Tenths.

DIAMETER	AREA.	CIRCUM.	DIAMETER.	AREA.	CIRCUM.
0.0			.5	15 9043	14.1372
.1	.007854	.31416	.6	16.6190	14.4513
.2	.031416	.62832	.7	17.3494	14.7655
.3	.070686	.94248	.8	18.0956	15.0796
.4	.12566	1.2566	.9	18.8574	15.3938
.5	.19635	1.5708	5.0	19.6350	15.7080
.6	.28274	1.8850	.1	20.4282	16.0221
.7	.38485	2.1991	.2	21.2372	16.3363
.8	.50266	2.5133	.3	22.0618	16.6504
.9	.63617	2.8274	.4	22.9022	16.9646
1.0	.7854	3.1416	.5	23.7583	17.2788
.1	.9503	3.4558	.6	24.6301	17.5929
.2	1.1310	3.7699	.7	25.5176	17.9071
.3	1.3273	4.0841	.8	26.4208	18.2212
.4	1.5394	4.3982	.9	27.3397	18.5354
.5	1.7681	4.7124	6.0	28.2743	18.8496
.6	2.0106	5.0265	.1	29.2247	19.1637
.7	2.2698	5.3407	.2	30.1907	19.4779
.8	2.5447	5.6549	.3	31.1725	19.7920
.9	2.8353	5.9690	.4	32 1699	20.1062
2.0	3.1416	6.2832	.5	33.1831	20.4204
.1	3.4636	6.5973	.6	34.2119	20.7345
.2	3.8013	6.9115	.7	35.2565	21.0487
3	4.1548	7.2257	.8	36.3168	21.3628
.4	4.5239	7.5398	.9	37.3928	21.6770
.5	4.9087	7.8540	7 0	38.4845	21.9911
.6	5.3093	8.1681	.1	39.5919	22.3053
.7	5.7256	8.4823	.2	40.7150	22.6195
.8	6.1575	8.7965	.3	41.8539	22.9336
.9	6.6052	9.1106	.4	43.0084	23.2478
3.0	7.0686	9.4248	.5	44.1786	23.5619
.1	7.5477	9.7389	.6	45.3646	23.8761
.2	8.0425	10.0531	.7	46.5663	25.1903
.3	8.5530	10.3673	.8	47.7836	24.5055
.4	9.0792	10.6814	.9	49.0167	24.8186
.5	9.6211	10.9956	8.0	50.2655	25.1327
.6	10.1788	11.3097	.1	51.5300	25.4469
.7	10.7521	11.6239	.2	52.8102	25.7611
.8	11.3411	11.9381	.3	54.1061	26.0752
.9	11.9459	12.2522	.4	55.4177	26.3494
4.0	12 5664	12.5664	.5	56.7450	26.7035
.1	13.2025	12.8805	.6	58.0880	27.0177
.2	13.8544	13.1947	.7	59.4468	27.3319
.3	14.5220	13.5088	.8	60.8212	27.6460
.4	15.2053	13.8230	.9	62.2114	27.9602

AREAS AND CIRCUMFERENCES OF CIRCLES.

(*Continued.*)

DIAM.	AREA.	CIRCUM.	DIAM.	AREA.	CIRCUM.
9.0	63.6173	28.2743	.5	143.1388	42.4115
.1	65 0388	28 5885	.6	145.2672	42.7257
.2	66.4761	28.9027	.7	147.4114	43.0398
.3	67.9291	29.2168	.8	149.5712	43.3540
.4	69.3978	29.5310	.9	151.7468	43.6681
.5	70.8822	29 8451	14.0	153.9380	43.9823
.6	72.3823	30.1593	.1	156.1450	44.2965
.7	73.8981	30.4734	.2	158.3677	44.6106
.8	75.4296	30.7876	.3	160.6061	44.9248
.9	76.9769	31.1018	.4	162.8602	45.2389
10.0	78.5398	31.4159	.5	165.1300	45.5531
.1	80.1185	31.7301	.6	167.4155	45.8637
.2	81.7128	32.0442	.7	169.7167	46.1814
.3	83.3229	32.3584	.8	172.0336	46.4956
.4	84.9487	32.6726	.9	174.3662	46.8097
.5	86.5901	32.9867	15.0	176.7146	47.1239
.6	88.2473	33.3009	.1	179.0786	47.4380
.7	89.9202	33.6150	.2	181.4584	47.7522
.8	91.6088	33.9292	.3	183.8539	48.0664
.9	93.3132	34.2434	.4	186.2650	48.3805
11.0	95.0332	34.5575	.5	188.6919	48.6947
.1	96.7689	34.8717	.6	191.1345	49.0088
.2	98.5203	35.1858	.7	193.5928	49.3230
.3	100.2875	35.5000	.8	196.0668	49.6372
.4	102.0703	35.8142	.9	198.5565	49.9513
.5	103.8689	36.1283	16.0	201.0619	50.2655
.6	105.6832	36.4425	.1	203.5831	50.5796
.7	107.5132	36.7566	.2	206.1199	50.8938
.8	109.3588	37.0708	.3	208.6714	51.2080
.9	111.2202	37.3850	.4	211.2407	51.5221
12.0	113.0973	37.6991	.5	213.8246	51.8363
.1	114.9901	38.0133	.6	216.4243	52.1504
.2	116.8987	38.3274	.7	219.0397	52.4646
.3	118 8229	38.6416	.8	221.6708	52.7788
.4	120.7628	38.9557	.9	224.3176	53.0929
.5	122.7185	39 2699	17.0	226.9801	53.4071
.6	124.6898	39 5841	.1	229.6583	53.7212
.7	126 6769	39 8982	.2	232.3522	54.0354
.8	128.6796	40.2124	.3	235.0618	54.3496
.9	130.6981	40 5265	.4	237.7871	54.6637
13.0	132.7323	40.8407	.5	240.5282	54.9779
.1	134.7822	41.1549	.6	243.2849	55.2920
.2	136 8478	41.4690	.7	246.0574	55.6062
.3	138 9291	41.7832	.8	248.8456	55.9203
.4	141.0261	42.0973	.9	251.6494	56.2345

AREAS AND CIRCUMFERENCES OF CIRCLES.

(*Continued.*)

DIAM.	AREA.	CIRCUM.	DIAM.	AREA.	CIRCUM.
18 0	254.4690	56.5486	.5	397.6078	70.6858
.1	257.3043	56.8628	.6	401.1500	71.0000
.2	260.1553	57.1770	.7	404.7078	71.3142
.3	263.0220	57.4911	.8	408.2814	71.6283
.4	265.9044	57.8053	.9	411.8707	71.9425
.5	268.8025	58.1195	23.0	415.4756	72.2566
.6	271.7164	58.4336	.1	419.0963	72.5708
.7	274.6459	58.7478	.2	422.7327	72.8849
.8	277.5911	59.0619	.3	426.3848	73.1991
.9	280.5521	59.3761	.4	430.0526	73.5133
19.0	283.5287	59.6903	.5	433.7361	73.8274
.1	286.5211	60.0044	.6	437.4354	74.1416
.2	289.5292	60.3186	.7	441.1503	74.4557
.3	292.5530	60.6327	.8	444.8809	74.7699
.4	295.5925	60.9469	.9	448.6273	75.0841
.5	298.6477	61.2611	24.0	452.3893	75.3982
.6	301.7186	61.5752	.1	456.1671	75.7124
.7	304.8052	61.8894	.2	459.9606	76.0265
.8	307.9075	62.2035	.3	463.7698	76.3407
.9	311.0255	62.5177	.4	467.5947	76.6549
20.0	314.1593	62.8319	.5	471.4352	76.9690
.1	317.3087	63.1460	.6	475.2916	77.2832
.2	320.4739	63.4602	.7	479.1636	77.5973
.3	323.6547	63.7743	.8	483.0513	77.9115
.4	326.8513	64.0885	.9	486.9547	78.2257
.5	330.0636	64.4026	25.0	490.8739	78.5398
.6	333.2916	64.7168	.1	494.8087	78.8540
.7	336.5353	65.0310	.2	498.7592	79.1681
.8	339.7947	65.3451	.3	502.7255	79.4823
.9	343.0698	65.6593	.4	506.7075	79.7965
21.0	346.3606	65.9734	.5	510.7052	80.1106
.1	349.6671	66.2876	.6	514.7185	80.4248
.2	352.9894	66.6018	.7	518.7476	80.7389
.3	356.3273	66.9159	.8	522.7924	81.0531
.4	359.6809	67.2301	.9	526.8529	81.3672
.5	363.0503	67.5442	26.0	530.9292	81.6814
.6	366.4354	67.8584	.1	535.0211	81.9956
.7	369.8361	68.1726	.2	539.1287	82.3097
.8	373.2526	68.4867	.3	543.2521	82.6239
.9	376.6848	68.8009	.4	547.3911	82.9380
22.0	380.1327	69.1150	.5	551.5459	83.2522
.1	383.5963	69.4292	.6	555.7163	83.5664
.2	387.0756	69.7434	.7	559.9025	83.8805
.3	390.5707	70.0575	.8	564.1044	84.1947
.4	394.0814	70.3717	.9	568.3220	84.5088

AREAS AND CIRCUMFERENCES OF CIRCLES.

(*Continued.*)

DIAM.	AREA.	CIRCUM.	DIAM.	AREA.	CIRCUM.
27.0	572.5553	84.8230	.5	779.3113	98.9602
.1	576.8043	85.1372	.6	784.2672	99.2743
.2	581.0690	85.4513	.7	789.2388	99.5885
.3	585.3494	85.7655	.8	794.2260	99.9026
.4	589.6455	86.0796	.9	799.2290	100.2168
.5	593.9574	86.3938	32.0	804.2477	100.5310
.6	598.2849	86.7080	.1	809.2821	100.8451
.7	602.6282	87.0221	.2	814.3322	101.1593
.8	606.9871	87.3363	.3	719.3980	101.4734
.9	611.3618	87.6504	.4	824.4796	101.7876
28.0	615.7522	87.9646	.5	829.5768	102.1018
.1	620.1582	88.2788	.6	834.6898	102.4159
.2	624.5800	88.5929	.7	839.8185	102.7301
.3	629.0175	88.9071	.8	844 9628	103.0442
.4	633.4707	89.2212	.9	850.1229	103.3584
.5	637.9397	89.5354	33.0	855.2986	103.6726
.6	642.4243	89.8495	.1	860.4902	103.9867
.7	646.9246	90.1637	.2	865.6973	104.3009
.8	651.4407	90.4779	.3	870.9202	104.6150
.9	655.9724	90.7920	.4	876.1588	104.9292
29.0	660.5199	91.1062	.5	881.4131	105.2434
.1	665.0830	91.4203	.6	886.6831	105.5575
.2	669.6619	91.7345	.7	891.9688	105.8717
.3	674.2565	92.0487	.8	897.2703	106.1858
.4	678.8668	92.3628	.9	902.5874	106.5000
.5	683.4928	92.6770	34.0	907.9203	106.8142
.6	688.1345	92.9911	.1	913.2688	107.1283
.7	692.7919	93.3053	.2	918.6331	107.4425
.8	697.4650	93.6195	.3	924.0131	107.7566
.9	702.1538	93.9336	.4	929.4088	108.0708
30.0	706.8583	94.2478	.5	934.8202	108.3849
.1	711.5786	94.5619	.6	940.2473	108.6991
.2	716.3145	94.8761	.7	945.6901	109.0133
.3	721.0662	95.1903	.8	951.1486	109.3274
.4	725.8336	95.5044	.9	956.6228	109.6416
.5	730.6167	95.8186	35.0	962.1128	109.9557
.6	735.4154	96.1327	.1	967.6184	110.2699
.7	740.2299	96.4469	.2	973.1397	110.5841
.8	745.0601	96.7611	.3	978.6768	110.8982
.9	749.9060	97.0752	.4	984.2296	111.2124
31.0	754.7676	97.3894	.5	989.7980	111.5265
.1	759.6450	97.7035	.6	995.3822	110.8407
.2	764.5380	98.0177	.7	1000.9821	112.1549
.3	769.4467	98.3319	.8	1006.5977	112.4690
.4	774.3712	98.6460	.9	1012.2290	112.7832

AREAS AND CIRCUMFERENCES OF CIRCLES.

(*Continued.*)

DIAM.	AREA.	CIRCUM.	DIAM.	AREA.	CIRCUM.
36.0	1017.8760	113.0973	.5	1288.2493	127.2345
.1	1023.5387	113.4115	.6	1294 6189	127.5487
.2	1029.2172	113.7257	.7	1301.0042	127.8628
.3	1034.9113	114.0398	.8	1307.4052	128.1770
.4	1040.6212	114.3540	.9	1313.8219	128.4911
.5	1046.3467	114.6681	41.0	1320.2543	128.8053
.6	1052.0880	114.9823	.1	1326.7024	129 1195
.7	1057.8449	115.2965	.2	1333.1663	129.4336
.8	1063.6176	115.6106	.3	1339.6458	129.7478
.9	1069.4060	115.9248	.4	1346.1410	130.0619
37.0	1075.2101	116 2389	.5	1352.6520	130.3761
.1	1081.0299	116.5531	.6	1359.1786	130.6903
.2	1086.8654	116.8672	.7	1365.7210	131.0044
.3	1092.7166	117.1814	.8	1372.2791	131.3186
.4	1098.5835	117.4956	.9	1378.8529	131.6327
.5	1104.4662	117.8097	42.0	1385.4424	131.9469
.6	1110.3645	118.1239	.1	1392.0476	132.2611
.7	1116.2786	118.4380	.2	1398.6685	132.5752
.8	1122.2083	118.7522	.3	1405.3051	132.8894
.9	1128.1538	119.0664	.4	1411.9574	133.2035
38.0	1134.1149	119.3805	.5	1418.6254	133.5177
.1	1140.0918	119.6947	.6	1425.3092	133.8318
.2	1146.0844	120.0088	.7	1432.0086	134.1460
.3	1152.0927	120.3230	.8	1438.7238	134.4602
.4	1158.1167	120.6372	.9	1445.4546	134.7743
.5	1164.1564	120.9513	43.0	1452.2012	135.0885
.6	1170.2118	121.2655	.1	1458.9635	135.4026
.7	1176.2830	121.5796	.2	1465.7415	135.7168
.8	1182.3698	121.8938	.3	1472.5352	136.0310
.9	1188.4724	122.2080	.4	1479.3446	136.3451
39.0	1194.5906	122.5221	.5	1486.1697	136.6593
.1	1200.7246	122.8363	.6	1493.0105	136.9734
.2	1206.8742	123.1504	.7	1499.8670	137.2876
.3	1213.0396	123.4646	.8	1506.7393	137.6018
.4	1219.2207	123.7788	.9	1513.6272	137.9159
.5	1225.4175	124.0929	44.0	1520.5308	138.2301
.6	1231.6300	124.4071	.1	1527.4502	138.5442
.7	1237.8582	124.7212	.2	1534.3853	138.8584
.8	1244.1021	125.0354	.3	1541.3360	139.1726
.9	1250.3617	125.3495	.4	1548.3025	139.4867
40.0	1256.6371	125.6637	.5	1555.2847	139.8009
.1	1262.9281	125.9779	.6	1562.2826	140.1153
.2	1269.2348	126.2920	.7	1569.2962	140.4292
.3	1275.5573	126.6062	.8	1576.3255	140.7434
.4	1281.8955	126.9203	.9	1583.3706	141.0575

AREA AND CIRCUMFERENCES OF CIRCLES.

(Continued.)

DIAM.	AREA.	CIRCUM.	DIAM.	AREA.	CIRCUM.
45 0	1590.4313	141.3717	.5	1924.4218	155.5088
.1	1597.5077	141.6858	.6	1932.2051	155.8230
.2	1604.5999	142.0000	.7	1940.0042	156.1372
.3	1611.7077	142.3142	.8	1947.8189	156 4513
.4	1618.8313	142.6283	.9	1955.6493	156.7655
.5	1625.9705	142.9425	50.0	1963.4954	157.0796
.6	1633.1255	143.2566	.1	1971.3572	157.3938
.7	1640.2962	143.5708	.2	1979.2348	157.7080
.8	1647.4826	143.8849	.3	1987.1280	158.0221
.9	1654.6847	144 1991	.4	1995.0370	158.3363
46.0	1661.9025	144.5133	.5	2002.9617	158.6504
.1	1669.1360	144.8274	.6	2010.9020	158 9646
.2	1676.3853	145.1416	.7	2018.8581	159.2787
.3	1683.6502	145 4557	.8	2026.8299	159.2929
.4	1690.9308	145.7699	.9	2034.8174	159.9071
.5	1698 2272	146.0841	51.0	2042.8206	160.2212
.6	1705.5392	146.3982	.1	2050.8395	160.5354
.7	1712.8670	146.7124	.2	2058 8742	160.8495
.8	1720.2105	147.0265	.3	2066.9245	161.1637
.9	1727.5697	147.3707	.4	2074.9905	161.4779
47.0	1734 9445	147.6550	.5	2083.0723	161.7920
.1	1742.3351	147.9690	.6	2091.1697	162.1062
.2	1749 7414	148.2832	.7	2099.2829	162.4203
.3	1757.1635	148.5973	.8	2107.4118	162.7345
.4	1764.6012	148.9115	.9	2115.5563	163.0487
.5	1772.0546	149.2257	52.0	2123.7166	163.3628
.6	1779.5237	149.5398	.1	2131.8926	163.6770
.7	1787.0086	149.8540	.2	2140.0843	163.9911
.8	1794.5091	150.1681	.3	2148.2917	164 3053
.9	1802.0254	150.4823	.4	2156.5149	164.6195
48.0	1809 5574	150.7964	.5	2164.7537	164.9336
.1	1817.1050	151.1106	.6	2173.0082	165.2479
.2	1824 6684	151.4248	.7	2181.2785	165.5619
.3	1832.2475	151.7389	.8	2189.5644	165.8761
.4	1839.8423	152.0531	.9	2197.8661	166.1903
.5	1847.4528	152.3672	53.0	2206.1834	166.5044
.6	1855.0790	152.6814	.1	2214.5165	166.8186
.7	1862 7210	152.9956	.2	2222.8653	167.1327
.8	1870.3786	153.3097	.3	2231.2298	167.4469
.9	1878.0519	153.6239	.4	2239.6100	167.7610
49.0	1885.7409	153.9380	.5	2248 0059	168.0752
.1	1893 4457	154.2522	.6	2256.4175	168.3894
.2	1901.1662	154.5664	.7	2264 8448	168.7035
.3	1908.9024	154.8805	.8	2273.2879	169.0177
.4	1916.6543	155.1947	.9	2281.7466	169.3318

AREA AND CIRCUMFERENCES OF CIRCLES.

(*Continued.*)

DIAM.	AREA.	CIRCUM.	DIAM.	AREA.	CIRCUM.
54.0	2290.2210	169.6460	.5	2687.8289	183.7832
.1	2298.7112	169.9602	.6	2697.0259	184.0973
.2	2307.2171	170.2743	.7	2706.2386	184.4115
.3	2315.7386	170.5885	.8	2715.4670	184.7256
.4	2324.2759	170.9026	.9	2724.7112	185.0398
.5	2332.8289	171.2168	59.0	2733.9710	185.3540
.6	2341.3976	171.5310	.1	2743.2466	185.6681
.7	2349.9820	171.8451	.2	2752.5378	185.9823
.8	2358.5821	172.1593	.3	2761.8448	186.2964
.9	2367.1979	172.4735	.4	2771.1675	186.6106
55.0	2375.8294	172.7876	.5	2780.5058	186.9248
.1	2384.4767	173.1017	.6	2789.8599	187.2389
.2	2393.1396	173.4159	.7	2799.2297	187.5531
.3	2401.8183	173.7301	.8	2808.6152	187.8672
.4	2410.5126	174.0442	.9	2818.0165	188.1814
.5	2419.2227	174.3584	60.0	2827.4334	188.4956
.6	2427.9485	174.6726	.1	2836.8660	188.8097
.7	2436.6899	174.9867	.2	2846.3144	189.1239
.8	2445.4471	175.3009	.3	2855.7784	189.4380
.9	2454.2200	175.6150	.4	2865.2582	189.7522
56.0	2463.0086	175.9292	.5	2874.7536	190.0664
.1	2471.8130	176.2433	.6	2884.2648	190.3805
.2	2480.6330	176.5575	.7	2893.7917	190.6947
.3	2489.4687	176.8717	.8	2903.3343	191.0088
.4	2498.3201	177.1858	.9	2912.8926	191.3230
.5	2507.1873	177.5000	61.0	2922.4666	191.6372
.6	2516.0701	177.8141	.1	2932.0563	191.9513
.7	2524.9687	178.1283	.2	2941.6617	192.2655
.8	2533.8830	178.4425	.3	2951.2828	192.5796
.9	2542.8129	178.7566	.4	2960.9197	192.8938
57.0	2551.7586	179.0708	.5	2970.5722	193.2079
.1	2560.7200	179.3849	.6	2980.2405	193.5221
.2	2569.6971	179.6991	.7	2989.9244	193.8363
.3	2578.6899	180.0133	.8	2999.6241	194.1504
.4	2587.6985	180.3274	.9	3009.3395	194.4646
.5	2596.7227	180.6416	62.0	3019.0705	194.7787
.6	2605.7626	180.9557	.1	3028.8173	195.0929
.7	2614.8183	181.2699	.2	3038.5798	195.4071
.8	2623.8896	181.5841	.3	3048.3580	195.7212
.9	2632.9767	181.8982	.4	3058.1520	196.0354
58.0	2642.0794	182.2124	.5	3067.9616	196.3495
.1	2651.1979	182.5265	.6	3077.7869	196.6637
.2	2660.3321	182.8407	.7	3087.6279	196.9779
.3	2669.4820	183.1549	.8	3097.4847	197.2920
.4	2678.6476	183.4690	.9	3107.3571	197.6062

AREAS AND CIRCUMFERENCES OF CIRCLES.

(*Continued.*)

DIAM.	AREA.	CIRCUM.	DIAM.	AREA.	CIRCUM.
63 0	3117.2453	197.9203	.5	3578.4704	212.0575
.1	3127.1492	198.2345	.6	3589.0811	212.3717
.2	3137.0688	198.5487	.7	3599.7075	212.6858
.3	3147.0040	198.8628	.8	3610.3497	213.0000
.4	3156.9550	199.1770	.9	3621.0075	213.3141
.5	3166.9217	199.4911	68.0	3631.6811	213.6283
.6	3176.9043	199.8053	.1	3642.3704	213.9425
.7	3186.9023	200.1195	.2	3653.0754	214.2566
.8	3196.9161	200.4336	.3	3663.7960	214.5708
.9	3206.9456	200.7478	.4	3674.5324	214.8849
64.0	3216.9909	201.0620	.5	3685.2845	215.1991
1	3227.0518	201.3761	.6	3696.0523	215,5133
.2	3237.1285	201.6902	.7	3706.8359	215.8274
.3	3247.2222	202.0044	.8	3717.6351	216.1416
.4	3257.3289	202.3186	.9	3728.4500	216.4556
.5	3267.4527	202.6327	69.0	3739.2807	216.7699
.6	3277.5922	202.9469	.1	3750.1270	217.0841
.7	3287.7474	203.2610	.2	3760.9891	217.3982
.8	3297.9183	203.5752	.3	3771.8668	217.7124
.9	3308.1049	203.8894	.4	3782.7603	218.0265
65.0	3318.3072	204.2035	,5	3793.6695	218.3407
.1	3328.5253	204.5176	.6	3804.5944	218.6548
.2	3338.7590	204.8318	.7	3815.5350	218.9690
.3	3349.0085	205.1460	.8	3826.4913	219.2832
.4	3359.2736	205.4602	.9	3837.4633	219.5973
.5	3369.5545	205.7743	70.0	3848.4510	219.9115
.6	3379.8510	206.0885	.1	3859.4544	220.2256
.7	3390.1633	206.4026	.2	3870.4736	220.5398
.8	3400.4913	206.7168	.3	3881.5084	220.8540
.9	3410.8350	207.0310	.4	3892.5590	221.1681
66.0	3421.1944	207.3451	.5	3903.6252	221.4823
.1	3431.5695	207.6593	.6	3914 7072	221.7964
.2	3441.9603	207.9734	.7	3925 8049	222.1106
.3	3452.3669	208.2876	.8	3936.9182	222.4248
.4	3462.7891	208.6017	.9	3948.0473	222.7389
.5	3473.2270	208.9159	71.0	3959.1921	223.0531
.6	3483.6807	209.2301	.1	3970.3526	223.3672
.7	3494.1500	209.5442	.2	3981.5289	223.6814
.8	3504.6351	209.8584	.3	3992.7208	223.9956
.9	3515.1359	210.1725	.4	4003.9284	224.3097
67.0	3525.6524	210.4867	.5	4015.1518	224.6239
.1	3536.1845	210.8009	.6	4026.3908	224.9380
.2	3546.7324	211.1150	.7	4037.6456	225.2522
.3	3557.2960	211.4292	.8	4048.9160	225.5664
.4	3567.8754	211.7433	.9	4060.2022	225.8805

AREAS AND CIRCUMFERENCES OF CIRCLES.

(*Continued.*)

DIAM.	AREA.	CIRCUM.	DIAM.	AREA.	CIRCUM.
72.0	4071.5041	226.1947	.5	4596.3464	240.3318
.1	4082.8217	226.5088	.6	4608.3708	240.6460
.2	4094.1550	226.8230	.7	4620.4110	240.9602
.3	4105.5040	227.1371	.8	4632.4669	241.2743
.4	4116.8687	227.4513	.9	4644.5384	241.5885
.5	4128.2491	227.7655	77.0	4656.6257	241.9026
.6	4139.6452	228.0796	.1	4668.7287	242.2168
.7	4151.0571	228.3938	.2	4680.8474	242.5310
.8	4162.4846	228.7079	.3	4692.9818	242.8451
.9	4173.9279	229.0221	.4	4705.1319	243.1592
73.0	4185.3868	229.3363	.5	4717.2977	243.4734
.1	4196.8615	229.6504	.6	4729.4792	243.7876
.2	4208.3519	229.9646	.7	4741.6765	244.1017
.3	4219.8579	230.2787	.8	4753.8894	244.4159
.4	4231.3797	230.5929	.9	4766.1181	244.7301
.5	4242.9172	230.9071	78.0	4778.3624	245.0442
.6	4254.4704	231.2212	.1	4790.6225	245.3584
.7	4266.0394	231.5354	.2	4802.8983	245.6725
.8	4277.6240	231.8495	.3	4815.1897	245.9867
.9	4289.2243	232.1637	.4	4827.4969	246.3009
74.0	4300.8403	232.4779	.5	4839.8198	246.6150
.1	4312.4721	232.7920	.6	4852.1584	246.9292
.2	4324.1195	233.1062	.7	4864.5128	247.2433
.3	4335.7827	233.4203	.8	4876.8828	247.5575
.4	4347.4616	233.7345	.9	4889.2685	247.8717
.5	4359.1562	234.0487	79.0	4901.6699	248.1858
.6	4370.8664	234.3628	.1	4914.0871	248.5000
.7	4382.5924	234.6770	.2	4926.5199	248.8141
.8	4394.3341	234.9911	.3	4938.9685	249.1283
.9	4406.0916	235.3053	.4	4951.4328	249.4425
75.0	4417.8647	235.6194	.5	4963.9127	249.7566
.1	4429.6535	235.9336	.6	4976.4084	250.0708
.2	4441.4580	236.2478	.7	4988.9198	250.3850
.3	4453.2783	236.5619	.8	5001.4469	250.6991
.4	4465.1142	236.8761	.9	5013.9897	251.0133
.5	4476.9659	237.1902	80.0	5026.5482	251.3274
.6	4488.8332	237.5044	.1	5039.1225	251.6416
.7	4500.7163	237.8186	.2	5051.7124	251.9557
.8	4512.6151	238.1327	.3	5064.3180	252.2699
.9	4524.5296	238.4469	.4	5076.9394	252.5840
76.0	4536.4598	238.7610	.5	5089.5764	252.8982
.1	4548.4057	239.0752	.6	5102.2292	253.2124
.2	4560.3673	239.3894	.7	5114.8977	253.5265
.3	4572.3446	239.7035	.8	5127.5819	253.8407
.4	4584.3377	240.0177	.9	5140.2818	254.1548

AREA AND CIRCUMFERENCES OF CIRCLES.

(*Continued.*)

DIAM.	AREA.	CIRCUM.	DIAM.	AREA.	CIRCUM.
81.0	5152.9973	254.4690	.5	5741.4569	268.6062
.1	5165.7287	254.7832	.6	5754.8951	268.9203
.2	5178.4757	255.0973	.7	5768.3490	269.2345
.3	5191.2384	255.4115	.8	5781.8185	269.5486
.4	5204.0168	255.7256	.9	5795.3038	269.8628
.5	5216.8110	256.0398	86 0	5808.8048	270.1770
.6	5229.6208	256.3540	.1	5822.3215	270.4911
.7	5242.4463	256.6681	.2	5835.8539	270.8053
.8	5255.2876	256.9823	.3	5849.4020	271.1194
.9	5268.1446	257.2966	.4	5862.9659	271.4336
82.0	5281.0173	257.6106	.5	5876.5454	271.7478
.1	5293.9056	257.9247	.6	5890.1407	272.0619
.2	5306.8097	258.2389	.7	5903.7516	272.3761
.3	5319.7295	258.5531	.8	5917.3783	272.6902
.4	5332.6650	258.8672	.9	5931.0206	273.0044
.5	5345.6162	259.1814	87.0	5944.6787	273.3186
.6	5358.5832	259.4956	.1	5958.3525	273.6327
.7	5371.5658	259.8097	.2	5972.0420	273.9469
.8	5384.5641	260.1239	.3	5985.7472	274.2610
.9	5397.5782	260.4380	.4	5999.4681	274.5752
83.0	5410.6079	260.7522	.5	6013.2047	274.8894
.1	5423.6534	261.0663	.6	6026.9570	275.2035
.2	5436.7146	261.3805	.7	6040.7250	275.5177
.3	5449.7915	261.6947	.8	6054.5088	275.8318
.4	5462.8840	262.0088	.9	6068.3082	276 1460
.5	5475.9923	262.3230	88.0	6082.1234	276 4602
.6	5489.1163	262.6371	.1	6095.9542	276.7743
.7	5502.2561	262.9513	.2	6109.8008	277.0885
.8	5515.4115	263.2655	.3	6123.6631	277.4026
.9	5528.5826	263.5796	.4	6137.5411	277.7168
84.0	5541.7694	263.8938	.5	6151.4348	278.0309
.1	5554.9720	264.2079	.6	6165.3442	278.3451
.2	5568.1902	264.5221	.7	6179.2693	278.6593
.3	5581.4242	264.8363	.8	6193.2101	278.9740
.4	5594.6739	265.1514	.9	6207.1666	279.2876
.5	5607.9392	265.4646	89.0	6221.1389	279.6017
.6	5621.2203	265.7787	.1	6235.1268	279.9159
.7	5634.5171	266.0929	.2	6249.1304	280.2301
.8	5647.8296	266.4071	.3	6263.1498	280.5442
.9	5661.1578	266.7212	.4	6277.1849	280.8584
85.0	5674.5017	267.0354	.5	6291.2356	281.1725
.1	5687.8614	267.3495	.6	6305.3021	281.4867
.2	5701.2367	267.6637	.7	6319.3843	281.8009
.3	5714.6277	267.9779	.8	6333.4822	282.1150
.4	5728.0345	268.2920	.9	6347.5958	282 4292

AREAS AND CIRCUMFERENCES OF CIRCLES.

(*Continued.*)

DIAM.	AREA.	CIRCUM.	DIAM.	AREA.	CIRCUM.
90.0	6361.7251	282.7433	.5	7013.8019	296.8805
.1	6375.8701	283.0575	.6	7028.6538	297.1947
.2	6390.0309	283.3717	.7	7023.5214	297.5088
.3	6404.2073	283.6858	.8	7058.4047	297.8230
.4	6418.3995	284.0000	.9	7073.3033	298.1371
.5	6432.6073	284.3141	95.0	7088.2184	298.4513
.6	6446.8309	284.6283	.1	7103.1488	298.7655
.7	6461.0701	284.9425	.2	7118.1950	299.0796
.8	6475.3251	285.2566	.3	7133.0568	299.3938
.9	6489.5958	285.5708	.4	7148.0343	299.7079
91.0	6503.8822	285.8849	.5	7163.0276	300.0221
.1	6518.1843	286.1991	.6	7178.0366	300.3363
.2	6532.5021	286.5133	.7	7193.0612	300.6504
.3	6546.8356	286.8274	.8	7208.1016	300.9646
.4	6561.1848	287.1416	.9	7223.1577	301.2787
.5	6575.5498	287.4557	96.0	7238.2295	301.5929
.6	6589.9304	287.7699	.1	7253.3170	301.9071
.7	6604.3268	288.0840	.2	7268.4202	302.2212
.8	6618.7388	288.3982	.3	7283.5391	302.5354
.9	6633.1666	288.7124	.4	7298.6737	302.8405
92.0	6647.6101	289.0265	.5	7313.8240	303.1637
.1	6662.0692	289.3407	.6	7328.9901	303.4779
.2	6676.5441	289.6548	.7	7344.1718	303.7920
.3	6691.0347	289.9690	.8	7359.3693	304.1062
.4	6705.5410	290.2832	.9	7374.5824	304.4203
.5	6720.0630	290.5973	97.0	7389.8113	304.7345
.6	6734.6008	290.9115	.1	7405.0559	305.0486
.7	6749.1542	291.2256	.2	7420.3162	305.3628
.8	6763.7233	291.5398	.3	7435.5922	305.6770
.9	6778.3082	291.8540	.4	7450.8839	305.9911
93.0	6792.9087	292.1681	.5	7466.1913	306.3053
.1	6807.5250	292.4823	.6	7481.5144	306.6194
.2	6822.1569	292.7964	.7	7496.8532	306.9336
.3	6836.8046	293.1106	.8	7512.2078	307.2478
.4	6851.4680	293.4248	.9	7527.5780	307.5619
.5	6866.1471	293.7389	98.0	7542.9640	307.8761
.6	6880.8419	294.0531	.1	7558.3656	308.1902
.7	6895.5524	294.3672	.2	7573.7830	308.5044
.8	6910.2786	294.6814	.3	7589.2161	308.8186
.9	6925.0205	294.9956	.4	7604.6648	309.1327
94.0	6939.7782	295.3097	.5	7620.1293	309.4469
.1	6954.5515	295.6239	.6	7635.6095	309.7610
.2	6969.3106	295.9380	.7	7651.1054	310.0752
.3	6984.1453	296.2522	.8	7666.6170	310.3894
.4	6998.9658	296.5663	.9	7682.1444	310.7035

AREAS AND CIRCUMFERENCES OF CIRCLES.

(*Continued.*)

DIAM.	AREA.	CIRCUM.	DIAM.	AREA.	CIRCUM.
99 0	7697.6893	311.0177	.5	7775.6382	312.5885
.1	7713.2461	311.3318	.6	7791.2754	312.9026
.2	7728.8206	311.6460	.7	7806.9284	313.2168
.3	7744.4107	311.9602	.8	7822.5971	313.5309
.4	7760.0166	312.2743	.9	7838.2815	313.8451
			100.0	7853.9816	314.1593

To Compute the Area or Circumference of a Diameter Greater than 100 and Less than 1001.

Take out the area or circumference from table as though the number had one decimal, and move the decimal point two places to the right for the area, and one place for the circumference.

EXAMPLE: Wanted the area and circumference of 567. The tabular area for 56.7 is 2524.9687, and circumference 178.1283. Therefore area for 567 = 252496.87 and circumference = 1781.283.

To Compute the Area or Circumference of a Diameter Greater than 1000.

Divide by a factor, as 2, 3, 4, 5, etc., if practicable, that will leave a quotient to be found in table, then multiply the tabular area of the quotient by the square of the factor, or the tabular circumference by the factor.

EXAMPLE: Wanted the area aud circumference of 2109. Dividing by 3, the quotient is 703, for which the area is 388150.84 and the circumference 2208.54. Therefore area of 2109 = 388150.84 × 9 = 3493357.56, and circumference = 2208.54 × 3 = 6625.62.

Areas of Circles from .05 in. to .25 in.

BY HUNDREDTHS OF INCHES.

DIAM.	AREA. IN.	DIAM.	AREA. IN.	DIAM.	AREA. IN.
.05	.0019635	.12	.011309	.19	.028352
.06	.0028274	.13	.013273	.20	.031416
.07	.0038484	.14	.015393	.21	.034636
.08	.0050265	.15	.017671	.22	.038013
.09	.0063617	.16	.020106	.23	.041547
.10	.0078539	.17	.022698	.24	.045239
.11	.0095033	.18	.025446	.25	.049087

Table of the Areas of Circles and of the Sides of Squares of the same Area.

Diam. of Circle in Inches.	Area of Circle in Sq. Inches.	Sides of Square of same Area in Sq. Inches.	Diam. of Circle in Inches	Area of Circle in Sq. Inches.	Sides of Square of same Area in Sq. Inches
1.	.785	.89	11.	95.03	9.75
.¼	1.227	1.11	.¼	99.40	9.97
.½	1.767	1.33	.½	103.87	10.19
.¾	2.405	1.55	.¾	108.43	10.41
2.	3.142	1.77	12.	113.10	10.63
.¼	3.976	1 99	.¼	117.86	10.86
.½	4.909	2.22	.½	122.72	11.08
.¾	5.940	2.44	.¾	127.68	11.30
3.	7.069	2.66	13.	132.73	11.52
.¼	8.296	2.88	.¼	137.89	11.74
.½	9.621	3.10	.½	143.14	11.96
.¾	11.045	3.32	.¾	148.49	12.19
4.	12.566	3.54	14.	153.94	12.41
.¼	14.186	3.77	.¼	159.49	12.63
.½	15.904	3.99	.½	165.13	12.85
.¾	17.721	4.21	.¾	170.87	13.07
5.	19.635	4 43	15.	176.72	13.29
.¼	21.648	4.65	.¼	182.66	13.52
.½	23.758	4.87	.½	188.69	13.74
.¾	25.967	5 09	.¾	194.83	13.96
6.	28.274	5 32	16.	201.06	14.18
.¼	30.680	5 54	.¼	207.39	14.40
.½	33.183	5.76	.½	213.83	14.62
.¾	35 785	5.98	.¾	220.35	14.84
7.	38 485	6 20	17.	226.98	15.07
.¼	41.283	6.42	.¼	233.71	15.29
.½	44.179	6.65	.½	240.53	15.51
.¾	47.173	6 87	.¾	247.45	15.73
8.	50.266	7.09	18.	254.47	15.95
.¼	53.456	7.31	.¼	261.59	16.17
.½	56.745	7.53	.½	268.80	16.40
.¾	60.132	7.75	.¾	276.12	16.62
9.	63.617	7.98	19.	283.53	16.84
.¼	67.201	8.20	.¼	291.04	17.06
.½	70.882	8.42	.½	298.65	17.28
.¾	74.662	8.64	.¾	306.36	17.50
10.	78.540	8.86	20.	314.16	17.72
.¼	82.516	9.08	.¼	322.06	17.95
.½	86.590	9.30	.½	330.06	18.17
.¾	90.763	9.53	.¾	338.16	18.39

Table of the Areas of Circles and of the Sides of Squares of the same Area.

(*Continued.*)

Diam. of Circle in Inches.	Area of Circle in Sq. Inches.	Side of Square of same Area in Sq. Inches.	Diam. of Circle in Inches.	Area of Circle in Sq. Inches.	Side of Square of same Area in Sq. Inches.
21.	346.36	18.61	26.	530.93	23.04
.¼	354.66	18.83	.¼	541.19	23.26
.½	363.05	19.05	.½	551.55	23.49
.¾	371 54	19.28	.¾	562.00	23.71
22.	380.13	19.50	27.	572.56	23.93
.¼	388.82	19.72	.¼	583.21	24.15
.½	397.61	19.94	.½	593.96	24.37
.¾	406.49	20.16	.¾	604.81	24.59
23.	415.48	20.38	28.	615.75	24.81
.¼	424.56	20.60	.¼	626.80	25.04
.½	433.74	20.83	.½	637.94	25.26
.¾	443.02	21.05	.¾	649.18	25.48
24.	452.39	21.27	29.	660.52	25.70
.¼	461.86	21.49	.¼	671.96	25.92
.½	471.44	21.71	.½	683.49	26.14
.¾	481.11	21.93	.¾	695.13	26.37
25.	490.88	22.16	30.	706.86	26.59
.¼	500 74	22.38	.¼	718.69	26.81
.½	510.71	22.60	.½	730.62	27.03
.¾	520 77	22.82	.¾	742.65	27.25

Slow Speed and High Speed Engines.

The reason why the high speed engines are preferred is because they develop more power from the same quantity of fuel, than the old fashioned engines. The theory is that the piston and rod, cross head and other reciprocating parts, if they have a high speed, act upon the principle of the fly wheel, absorbing the force of the steam at the commencement, and giving it at the end of the stroke. The practical effect is to do away with the unequal steam pressure experienced in ordinary engines, securing in lieu thereof a uniform rotative pressure on the crank. The strain on each dead center is avoided in the high speed engine, and a uniform smoothness of running is attained. In a competitive trial in England not long ago, of two engines with cylinders of the same size, using the same weight of steam per horse power per hour, the high speed engine developed 43 per cent more horse power than its low speeded competitor.

Diameter and Circumference of Circles and the Contents in Gallons at One Foot in Depth.

DIAMETER.		CIRCUM.		AREA IN FEET.	GALLONS 1 FT. DEPTH.	DIAMETER.		CIRCUM.		AREA IN FEET.	GALLONS 1 FT. DEPTH.
FEET.	IN.	FEET.	IN.			FEET.	IN.	FEET.	IN.		
1		3	1⅝	.78	5.87	4	6	14	1⅝	15.90	118.93
1	1	3	4⅝	.92	6.89	4	7	14	4⅝	16.49	123.38
1	2	3	8	1.06	7.99	4	8	14	7⅞	17.10	127.91
1	3	3	11	1.22	9.17	4	9	14	11	17.72	132.52
1	4	4	2⅛	1.39	10.44	4	10	15	2⅛	18.34	137.21
1	5	4	5⅜	1.57	11.78	4	11	15	5¼	18.98	142.05
1	6	4	8½	1.76	13.21						
1	7	4	11⅝	1.96	14.72	5		15	8½	19.63	146.83
1	8	5	2¾	2.18	16.31	5	1	15	11⅝	20.29	151.77
1	9	5	5⅞	2.40	17.98	5	2	16	2¾	20.96	156.78
1	10	5	9	2.63	19.74	5	3	16	5¾	21.64	161 88
1	11	6		2.88	21.48	5	4	16	9	22.34	167.06
						5	5	17	0⅛	23.04	172.33
2		6	3⅜	3.14	23.49	5	6	17	3¼	23.75	177.67
2	1	6	6½	3,40	25.49	5	7	17	6⅜	24.48	183.09
2	2	6	9⅝	3.68	27.57	5	8	17	9⅝	25.21	188.60
2	3	7	0¾	3.97	29.73	5	9	18	0¾	25.96	194.19
2	4	7	3⅞	4.27	32.69	5	10	18	3⅞	26.72	199.86
2	5	7	7	4.58	34.30	5	11	18	7⅛	27.49	205.61
2	6	7	10¼	4.90	36.70						
2	7	8	1⅜	5.24	39.19	6		18	10⅛	28.27	211.55
2	8	8	4½	5.58	41.76	6	3	19	7½	30.67	229.43
2	9	8	7⅝	5.93	44.41	6	6	20	4⅞	33.18	248.15
2	10	8	10¾	6.30	47.15	6	9	21	2⅜	35.78	267 61
2	11	9	1⅞	6.68	49.96						
3		9	5	7.06	52.86	7		21	11⅞	38.48	287.80
3	1	9	8¼	7.46	55.83	7	3	22	9¼	41.28	308.72
3	2	9	11⅜	7.87	58.89	7	6	23	6¾	44.17	330.38
3	3	10	2½	8.29	62.03	7	9	24	4⅛	47.17	352.76
3	4	10	5⅝	8.72	65.26						
3	5	10	8¾	9.16	68.51	8		25	1½	50.26	375.90
3	6	10	11⅞	9.62	73.15	8	3	25	11	53.45	399.76
3	7	11	3	10.08	75.41	8	6	26	8⅜	56.74	424.36
3	8	11	6⅛	10.55	78.96	8	9	27	5¾	60.13	449.21
3	9	11	9⅜	11.04	82.59						
3	10	12	0½	11.54	86 30	9		28	3¼	63.61	475.75
3	11	12	3⅝	12.04	90.10	9	3	29	0⅝	67.20	502.55
						9	6	29	10⅛	70.88	530.08
4		12	6¾	12 56	93.97	9	9	30	7½	74.66	558.35
4	1	12	9⅞	13.09	97.93						
4	2	13	1	13.63	101.97	10		31	5	78.54	587.35
4	3	13	4⅛	14.18	103.03	10	3	32	2⅜	82.51	617.08
4	4	13	7¼	14.74	110.29	10	6	32	11¾	86.59	647.55
4	5	13	10½	15.32	114.57	10	9	33	9¼	90.76	678.27

How to Reverse the Motion of an Engine.

First make a mark on the side of the eccentric, near the shaft, with a scribe or small chisel; make a corresponding mark on the shaft at the same point, then place one point of a pair of calipers on the mark on the shaft, and with the other point find the center of the shaft on the opposite side. Then, with a scribe, mark this point also. Now unscrew the eccentric and move it around in the direction in which the engine is intended to run, until the mark on the eccentric comes into line with the second mark on the shaft; then make the eccentric fast, and the engine will run in the opposite direction. It does not make any difference in what direction the crank is when the eccentric is moved.

OFFICIAL TABLE

Adopted by the Association of Copper Manufacturers of the United States.

Rolled copper has specific gravity of 8.93. One cubic foot weighs 558 $\frac{125}{1000}$ lbs. One square foot, of one inch thick, weighs 46 $\frac{51}{100}$ lbs.

STUBS' GAUGE (NEAREST NO.)	THICKNESS IN DECIMAL PARTS OF ONE INCH.	OZ. PER SQUARE FOOT.	SHEETS 14x48 WEIGHT IN LBS.	SHEETS 24x48 WEIGHT IN LBS.	SHEETS 30x60 WEIGHT IN LBS.	SHEETS 36x72 WEIGHT IN LBS.	SHEETS 48x72 WEIGHT IN LBS.
35	.00537	4	1.16	2	3.12	4.50	6
33	.00206	6	1.75	3	4.68	6.75	9
31	.0107	8	2.33	4	6.25	9	12
29	.0134	10	2.91	5	7.81	11.25	15
27	.0161	12	3 50	6	9.37	13.50	18
26	.0188	14	4.08	7	10.93	15.75	21
24	.0215	16	4.66	8	12 50	18	24
23	.0242	18	5.25	9	14.06	20.25	27
22	.0269	20	5.83	10	15.62	22 50	30
21	.0322	24	7	12	18.75	27	36
19	.0430	32	9.33	16	25	36	48
18	.0538	40	11.66	20	31.25	45	60
16	.0645	48	14	24	37.50	54	72
15	.0754	56	16.33	28	43.75	63	84
14	.0860	64	18.66	32	50	72	96
13	.095	70		35	55	79	105
12	.109	81		40½	63	91	122
11	.120	89		44½	70	100	134
10	.134	100		50	78	112	150
9	.148	110		55	86	124	165
8	.165	123		61	96	138	184
7	.180	134		67	105	151	201
6	.203	151		75½	118	170	227
5	.220	164		82	128	184	246
4	.238	177		88½	138	199	266
3	.259	193		96	151	217	289
2	.284	211		105½	165	238	317
1	.300	223		111½	174	251	335
0	.340	253		126½	198	285	380

Weight of Sheet Copper Per Square Foot.

$\frac{1}{16}$ inch thick weighs 3 lbs. to the square foot.

⅛ " " " 6 " " " "

¼ " " " 12 " " " "

½ " " " 24 " " " "

The following comparative table of weights will be found useful in estimating on specifications—the gauge used being the standard in copper.

Braziers' Sheet.

SHEET. 30x60.	WEIGHT TO SQUARE FOOT.	BIRMINGHAM WIRE GAUGE.
12½ lbs.	1 lb.	= No. 24.
13 "	1.04 lbs.	= " 24 full.
14 "	1.12 "	= " 23 light.
15 "	1.20 "	= " 22½.
16 "	1.28 "	= " 22 full.
18 "	1.44 "	= " 21.
20 "	1.60 "	= " 20 full.
22 "	1.76 "	= " 19½.
25 "	2.00 "	= " 18½.
27 "	2.16 "	= " 18 light.
30 "	2.40 "	= " 17½.
35 "	2.80 "	= " 16½
40 "	3.20 "	= " 15 light.
45 "	3.60 "	= " 14 light.
55 "	4.40 "	= " 13 full.
65 "	5.20 "	= " 11½.
75 "	6.00 "	= " 10.
80 "	6.40 "	= " 9½.
90 "	7.20 "	= " 8 light.
100 "	8.00 "	= " 7 "
110 "	8.80 "	= " 6½ "
120 "	9.60 "	= " 5½.

Gutter Copper.

Thickness Wire Gauge.	Usual Thickness of 30x60 sht. Pounds.	Size.	Sheets of Same Thickness. Pounds.	20x72. Oz.
27	10	30x60	9	2
24	12	30x60	10	8
24	14	30x60	13	2

Tinned Copper.

Thickness Wire Gauge.	Weight per Sheet. Pounds.	Ounces.	Size of Sheet. Inches.	Wt per sq ft. Ounces.
24	4	9	14x48	14
25	4	4	14x48	17

Planished Copper.

Boiler Size.

Weight of Sheet. Pounds.	Ounces.	Number.	Size of Sheet.
3	14	6	14x49
4		7	14x52
5	2	8	14x57
5	9	9	14x60
4		14	14x48
4	4	16	14x48

Classification of Copper.

Standard Size Braziers'.....30″ x 60″
Standard Size Sheathing.....14″ x 48″

All copper in sheets is numbered according to Stub's Gauge.
All brass in sheets is numbered according to Brown & Sharpe's Gauge.
Brass and Copper Wire is numbered according to Stub's Gauge.
Brazed Brass and Copper Tubing is numbered according to Brown & Sharpe's Gauge
Seamless Brass and Copper Tubing is numbered according to Stub's Gauge.
In ordering sheet metal give width and temper wanted.
In ordering wire always state whether Hard, Soft or Spring Wire is wanted.
Rolled copper has specific gravity of 8.93. One cubic foot weighs $558\frac{125}{1000}$ lbs. One square foot, of one inch thickness, weighs $46\frac{51}{100}$ lbs.

To Ascertain the Weight of Cast Copper.

RULE: Find the number of cubic inches in the piece, multiply by 0 3146 and the product will be the weight in pounds.

Bolt Copper.

WEIGHT PER LINEAL FOOT.

SIZE.	ROUND.	SQUARE.
¼ inches.	.19 pounds.	.24 pounds.
⅜ "	.424 "	.54 "
½ "	.755 "	.96 "
⅝ "	1.17 "	1.50 "
¾ "	1.69 "	2.16 "
⅞ "	2.31 "	2.94 "
1 "	3.02 "	3.84 "
1⅛ "	3 82 "	4.86 "
1¼ "	4.71 "	6. "
1⅜ "	5 71 "	7.27 "
1½ "	6.79 "	8.65 "
1⅝ "	7.94 "	10.15 "
1¾ "	9.21 "	11.77 "
1⅞ "	10.61 "	13.52 "
2 "	12.08 "	15.38 "

To Ascertain the Weight of Rolled Copper.

Find the number of cubic inches in the piece, multiply by 0.3214, and the product will be the weight in pounds.
Or, multiply the length and breadth (in feet) and that by the pounds per square foot.

Bridge Wire Tables.

New York and Brooklyn Bridge.

Cable composed of 6,000 No. 7 galvanized cast steel wires.
Ultimate strength of cable = 22,300,000 pounds.
Diameter of cable = 15½ inches.

Covington and Cincinnati Bridge.

Cable composed of 5,180 iron wires of No. 9 gauge.
Ultimate strength of cable = 8,424,000 pounds.
Diameter of cable = 12 inches.

Niagara Railway Bridge.

Cable composed of 3,640 iron wires of No. 9 gauge.
Ultimate strength of cable = 6,000,000 pounds.
Diameter of cable = 10 inches.

JOHN A. ROEBLING, Engineer.

Galvanized Steel Tables.

FOR SUSPENSION BRIDGES.

Diameter in Inches.	Ultimate Strength in Tons of 2,000 Pounds.	Weight per Foot.	Diameter in Inches.	Ultimate Strength in Tons of 2,000 Pounds.	Weight per Foot.
2⅝	220	13	1⅞	100	5.8
2½	200	11 3	1¾	95	5.6
2⅜	180	10	1⅝	75	4.35
2¼	155	8.64	1½	65	3.7
2	110	6.5			

SIZES OF CRUCIBLES.

Numbers.	Height Outside.	Diameter at the Top Outside.	Diameter at the Bilge Outside.	Diameter at the Bottom Outside.	Weight of the Crucible.		Capacity of Crucible by Wt. of Water.	
	Inches.	Inches.	Inches.	Inches.	Lbs.	Oz.	Lbs.	Oz.
1	3¼	2½	2⅝	1⅝		9		4¼
2	3¾	2⅞	3	2⅛		12		6½
3	4½	3½	3⅝	2¼	1	8		11
4	5	4	$4\frac{3}{16}$	3	1	13	1	
5	5¼	4¼	4⅜	3⅛	2	4	1	4
6	5¾	4½	4¾	3⅜	2	12	1	12
7	6¼	4⅞	5	3½	3	3	2	
8	6½	5	$5\frac{1}{16}$	3⅝	3	8	2	4
10	7⅜	$5\frac{7}{16}$	5¾	4¼	4	12	3	
12	8	6	6¼	4¾	6	8	4	8
14	8⅜	6¾	$7\frac{3}{16}$	5⅜	8	8	5	4
16	9	7	7½	5¾	9	4	6	4
18	9¼	7¼	7¾	5⅞	10	4	7	4
20	9¾	7⅝	8¼	6	12	8	8	12
25	10¼	8	8⅝	6½	14	4	10	4
30	11	8⅜	9	6¾	15	12	12	4
35	11¾	9⅛	9⅞	7¼	19	12	15	8
40	12¼	$9\frac{5}{16}$	10¼	7⅜	22		18	
45	13	9⅝	10½	7¾	25		20	
50	13⅝	9¾	10¾	7⅞	27	8	22	
60	13¾	10⅜	11⅛	8	28	8	24	
70	14½	10¾	$11\frac{9}{16}$	8⅛	33		26	4
80	15	10⅞	12	8¾	37	8	29	
100	16	11½	12½	9	42		32	4
125	16½	12½	13¾	9⅞	51	12	43	8

APPROXIMATE WEIGHT AND STRENGTH OF CORDAGE.

Circumference in INCHES.	Diameter in INCHES.	Weight of 1,000 feet.	Weight per Fathom.	No. of Feet in One Pound.	Strength of New Manila Rope.
Circ.	Dia.	Pounds.	Pounds.	Feet per lb.	Pounds.
¾ in 6 Th'd.	¼	23	1/7	43	450
1 " 9 "	5/16	33	1/5	30	750
1⅛ "12	⅜	42	¼	24	950
1¼	7/16	52	⅛	19	1,200
1½	½	74	9/20	13½	1,700
1¾	9/16	101	3/5	10	2,300
2	⅝	132	4/5	7½	3,000
2¼	¾	167	1	6	3,900
2½	13/16	207	1¼	5	4,700
2¾	⅞	250	1½	4	5,700
3	1	297	1 4/5	3⅛	6,750
3¼	1 1/16	349	2 1/10	2⅞	7,900
3½	1⅛	405	2 9/20	2½	9,200
3¾	1¼	465	2 4/5	2 1/6	10,600
4	1 5/16	529	3 1/6	1 9/10	12,000
4¼	1⅜	597	3 3/5	1⅞	13,500
4½	1 7/16	669	4	1½	15,250
4¾	1½	746	4½	1⅛	16,900
5	1⅝	826	5	1 1/5	18,750
5½	1¾	1000	6	1	22,700
5¾	1 13/16	1100	6⅝	11	25,000
6	1⅞	1190	7 1/7	10	27,000
6¼	2	1291	7¾	9 3/10	29,300
6½	2⅛	1397	8⅜	8 3/5	31,600
7	2¼	1620	9¾	7 2/5	36,750
7½	2⅜	1860	11 1/6	6½	42,200
8	2 9/16	2116	12 7/10	5⅝	48,000
8½	2¾	2388	14⅓	5	54,200
9	2⅞	2678	16 1/6	4½	60,700
9½	3⅛	2983	17 9/10	4	67,700
10	3¼	3306	19 5/6	3⅝	75,000

INCHES

Tarred Hemp Cordage will weigh (about) 1-4 more.

Hawser laid Rope will weigh 1-6 less.

The Relative Strength of Manila to Sisal is about as 7 is to 5.

TABLE OF AMERICAN COALS.

COAL. STATE.	KIND OF COAL.	Per Cent of Ash.	Theoretical Value. In Heat Units per lb.	In Pounds of Water Evaporation
Pennsylvania,	Anthracite	3.49	14.199	14 70
"	"	6.13	13.535	14.01
"	"	2.90	14.221	14 72
"	Cannel	15.02	13.143	13.60
"	Connelsville	6.50	13.368	13.84
"	Semi-Bituminous	10.77	13.155	13.62
"	Stone's Gas	5.00	14.021	14.51
"	Youghiogheny	5 60	14.265	14.76
"	Brown	9.50	12.324	12.75
Kentucky,	Caking	2.75	14.391	14 89
"	Cannel	2.00	15.198	16.76
"	"	14.80	13.360	13.84
"	Lignite	7.00	9.326	9 65
Illinois,	Bureau Co.	5.20	13.025	13.48
"	Mercer Co.	5.60	13.123	13.58
"	Montauk	5.50	12.659	13.10
Indiana,	Block	2.50	13.588	14.38
"	Caking	5.66	14.146	14.64
"	Cannel	6.00	13.097	13.56
Maryland,	Cumberland	13.98	12.226	12.65
Arkansas,	Lignite	5 00	9.215	9.54
Colorado,	"	9.25	13.562	14.04
"	"	4.50	13.866	14.35
Texas,	"	4.50	12 962	13.41
Wash. Ter.,	"	3.40	11 551	11.96
Pennsylvania,	Petroleum		20 746	21 47

WEIGHT OF CHARCOAL.

(Per bushel of 2748 cubic inches.)

Oak	21.38
Oak and Pine mixed	19.64
Pine	17.85
Pine (light)	17.19

SAFE LOAD, IN TONS OF 2,000 LBS. FOR CAST-IRON COLUMNS WITH TURNED CAPITALS AND BASES.

Length in Feet.	Outside diameter, 3 inches. Thickness in inches.				Outside diameter, 4 inches. Thickness in inches.				Outside diameter, 5 inches. Thickness in inches.				Outside diameter, 6 inches. Thickness in inches.			
	½	¾	1	1¼	½	¾	1	1¼	½	¾	1	1¼	¾	1	1¼	1½
7	12.8	15.9	17.2	....	24.9	32.9	38.3	41.7	39.5	53 8	65.0	73.3	77.3	95.5	110 3	122.1
8	10.9	13.0	14.0	....	21.7	28.4	33.0	35.8	35.1	47.6	57.3	64.4	69.7	85.7	98.7	108.8
9	8.9	10.7	11.4	....	19.0	24.8	28.7	31.0	31.3	42.3	50.7	56.8	62.8	77.1	88.5	97.3
10	7.5	8.9	9.6	....	17.4	22.0	24.9	26.3	28 0	57.7	45.1	50.4	56.9	69.6	79.6	87.4
11	6.4	7.6	8.1	....	14.8	18.7	21.1	22.4	25.2	33.8	40.3	44.9	51.6	63.0	71.9	78.7
12	5.4	6.6	7.0	....	12.7	16.2	18.2	19.3	22.7	30.5	36.2	40.3	46.9	57.2	65.2	71.2
13	4.8	5.7	6.1	....	11.1	14.1	15.9	16.8	21.0	27.6	32.2	35.2	42.9	52.1	59.3	64.6
14	4.2	5.0	5.4	....	9.8	12.4	14.0	14.9	18.5	24.3	28.3	31.0	39.3	47.6	54.1	58.9
15	3.7	4.5	4.8	....	8.7	11.1	12.5	13.2	16.5	21.6	25.2	27.6	36.8	43.9	49.0	52.6
16	3.4	4.0	4.3	....	7.8	9.9	11.2	11.8	14.8	19.4	22.6	24.7	33.0	39.4	44.0	47.2
17	3.0	3.6	3.9	....	7.0	8.9	10.1	10.7	13.3	17.5	20.4	22.3	29.8	35.5	39.7	42.5
18	2.8	3.3	3.6	....	6.4	8.1	9.1	9.7	12.1	15.9	18.5	20.2	27.0	32.2	36.0	38.6
19	2.5	3.0	3.2	....	5.8	7.4	8.3	8.8	11.0	14.5	16.9	18.4	24.6	29.4	32.8	35.2
20	2.3	2.7	2.9	....	5.3	6.8	7.6	8.1	10 1	13.3	15.4	16.9	22.6	26.9	30.1	32.3
21	2.1	2.5	2.7	....	4.9	6.2	7.0	7.5	9.3	12.2	14.2	15.5	20.8	24.8	27.7	29.7
22	2.	2.3	2.5	....	4.6	5.8	6.5	6.9	8.6	11.3	13.1	14.4	19.2	22.9	25.6	27.4
23	1.8	2.1	2.3	....	4.2	5.3	6.0	6.4	8.0	10.5	12.2	13.3	17.8	21.2	23.7	25.4
24	1.7	2.0	2.1	....	3.9	5.0	5.6	5.9	7.4	9.7	11.3	12.4	16.6	19.7	22.1	23.7
25	1.6	1.9		....	3.7	4.6	5.2	5.5	6.9	9.1	10.6	11.5	15.4	18.4	20.6	22.1

Length in Feet.	Outside diameter, 7 inches. Thickness in inches.				Outside diameter, 8 inches. Thickness in inches.				Outside diameter, 9 inches. Thickness in inches.			
	¾	1	1¼	1½	¾	1	1¼	1½	¾	1	1¼	1½
7	102.4	128.7	150.7	169.4	128.3	162.6	193.0	219.5	154.8	197.7	236.6	271.4
8	93.6	117.0	136.9	153.5	118.7	150.1	177.7	201.6	144.7	184.5	220.2	252.0
9	85.6	106.7	124.6	139.3	109.8	138.5	163.6	185.2	135.0	171.8	204.7	233.9
10	78.4	97.5	113.5	126.6	101.5	127.8	150.7	170.2	126.0	160.0	190.3	217.0
11	71.8	89.2	103.6	115.3	94.0	118.0	139.0	156.7	117.5	149.0	177.0	201.4
12	66.0	81.7	94.8	105.3	87.0	109.2	128.2	144.3	109.6	138.8	164.5	187.0
13	60.7	75.1	87 0	96.5	80.7	101.1	118.5	133.2	102.4	129.4	153.2	173.9
14	56.0	69.2	80.0	88.6	75.0	93.8	109.8	123.2	95.7	120.8	142.8	161.9
15	51.8	63.9	73.8	81.6	69.8	87.1	101.9	114.2	89.5	112.9	133.3	150.9
16	48.1	59.2	68.2	75.4	65.0	81.1	94.7	106.1	83.9	105.7	124.6	140.9
17	44.6	54.9	63.2	69.8	60.7	75.7	88.3	98.7	78.7	99.0	116.7	131.8
18	42.0	50.9	57.8	63.0	56.8	70.7	82.4	92.1	73.9	92.9	109.4	123.5
19	38.3	46.4	52.7	57.4	53.2	66.2	77.1	86.1	69.6	87.4	102.7	115.9
20	35.1	42.5	48.3	52.6	51.1	62.7	72.1	79.5	65.5	82.3	96.7	108.9
21	32.3	39.1	44.5	48.4	47.0	57.7	66.4	73.2	61.8	75.5	91.0	102.6
22	29.8	36.2	41.1	44.7	43.5	53.3	61.3	67.6	58.4	73.2	85.9	96.7
23	27.7	33.5	38.1	41.5	40.3	49.4	56.8	62.7	55.9	69.3	80.4	89.5
24	25.7	31.2	35.4	38.6	37.5	46.0	52.9	58.3	52.0	64.4	74.8	83.3
25	24.0	20.1	33.1	36.0	35.0	42.9	49.3	54.4	48.5	60.1	69.8	77.7

The great secret in smoke prevention is to have a hot fire with plenty of *room* and *time* to let all the gas burn before getting lower in temperature than a red heat (800 deg. Fahr.) and to fire in small quantities over a part of the grate at a time.

TABLES OF STRENGTH OF CAST IRON COLUMNS.

Based Upon "Gordon's Rules."

The weights are given in tons of 2,000 pounds avoirdupois, which can be borne with safety when the ends of columns are dressed or turned at right angles to their axes.

½ INCH METAL.

LENGTH IN FEET.	DIAMETER IN INCHES.								
	4	5	6	7	8	9	10	11	12
8	18.1	29.22	41.80	55.32	69.45	83.95	98.70	110.65	124.76
10	14.5	23.32	34.35	46.55	59.65	73.37	87.5	101.69	115.80
12	10.62	18.92	28.47	39.37	51.32	64.07	77.32	92.51	106.40
14	8.17	15.45	23.90	33.57	44.37	56.	68.53	83.32	97.21
16	6.52	12.30	20.47	28.85	38.58	49.28	60.83	74.81	88.25
18	5.33	10.	16.78	25.63	33.78	43.52	54.15	67.20	79.96
20	4.45	8.43	14.02	21.43	30.83	38.65	48.13	60.48	72.35

¾ INCH METAL.

LENGTH IN FEET.	4	5	6	7	8	9	10	11	12
8	23.70	36.68	59.05	77.97	98.95	120.58	142.60	159.58	182.13
10	18.38	31.45	47.40	65.30	84.62	104.97	126.	148.22	169.12
12	13.47	25.40	39.13	55.	72.52	91.35	111.18	135.78	155.17
14	10.37	20.25	32.73	46.70	62.50	79.75	98.15	121.71	141.6
16	8.27	16.15	27.50	40.	54.20	69.93	86.90	108.19	128.62
18	6.77	13.25	22.50	34.97	47.35	61.63	77.25	97.37	116.23
20	5.65	11.	18.83	29.25	42.60	54.63	68.95	87.63	105.61

1 INCH METAL.

LENGTH IN FEET.	4	5	6	7	8	9	10	11	12
8	27.5	47.73	71.45	97.52	125.12	153.72	182.95	207.2	238.39
10	20.73	37.57	58.	81.23	106.52	133.32	161.18	191.8	221.36
12	15.20	30.20	47.65	68.12	90.97	115.65	141.75	175.7	203.56
14	11.70	23.62	39.70	57.67	78.15	100.67	124.85	154.	185.76
16	9.32	18.82	32.80	49.30	67.60	88.05	110.30	140.	168.73
18	7.62	15.43	26.85	42.40	58.92	77.45	97.85	126.	152.47
20	6.37	12.87	22.45	35.45	52.25	68.55	87.20	113.4	138.54

1¼ INCH METAL.

LENGTH IN FEET.	4	5	6	7	8	9	10	11	12
8	29.85	53 65	82.25	114.20	148.10	183.50	219.80	253.67	292.60
10	21.95	42.	66.38	94.55	125.55	158.55	193.	234.82	271.70
12	16.10	33.60	54.33	79.00	106.82	137.10	169.27	215.10	249.85
14	12.40	25 82	45.10	66.65	91.47	119.	148.70	192.82	228.
16	9.87	20.57	36.65	56.85	78.95	103.85	131.10	171.40	207.10
18	8.07	16.85	30.	48.15	68.67	91.17	116.10	154.26	187.15
20	6.75	14.07	25.07	40.25	60.07	80.55	103.30	141.40	170.05

1½ INCH METAL.

LENGTH IN FEET.	4	5	6	7	8	9	10	11	12
8	31.15	57.80	90.70	127.92	168.02	210.02	253.27	296.	341.88
10	22.50	45.00	72.80	105.50	141.82	180.80	221.67	274.	317.46
12	16.50	35.85	59.33	87.77	120.25	155.82	193.85	251.	291.93
14	12.70	27.15	49.12	73.85	102.67	134.90	169.87	227.	266.40
16	10.12	21.62	39.30	62.83	88.40	117.45	149.45	202.	242.
18	8.27	17.70	32.17	52.47	76.75	102.94	132.10	180.	218.67
20	6.92	14.80	26.90	43.88	66.25	90.78	117.37	165.	198.69

TABLE OF BREAKING LOADS, IN TONS, OF HOLLOW CYLINDRICAL WROUGHT IRON COLUMNS.

With flat ends, perfectly true and firmly fixed, and the load pressing equally on every part of the top.

Length of Tube in Feet.	Thickness of Iron ⅛ Inch. External Diameter in Ins.					Thickness of Iron ¼ Inch. External Diameter in Ins.					Length of Tube in Feet.
	2	2¼	2½	2¾	3	2	2¼	2½	2¾	3	
	Tons.	Tons.	Tons.	Tons.	Tons.	Tons.	Tons.	Tons.	Tons.	Tons.	
1	11.7	13.2	14.8	16.4	18.0	21.9	25.4	28.3	31.4	34.5	1
2	11.2	12.8	14.5	16.1	17.8	21.1	24.3	27.6	30.7	33.9	2
3	10.6	12.2	13.9	15.6	17.3	19.9	23.1	26.4	29.7	33.0	3
4	9.9	11.6	13 3	15.0	16.7	18.6	21.8	25.3	28.5	31.9	4
5	9.1	10.8	12.5	14.2	16.0	17.0	20.4	23 5	27.3	30.7	5
6	8.3	9.9	11.6	13.4	15.2	15.4	18.8	22.1	25.7	29.2	6
7	7.4	9.1	10.8	12.6	14.4	13.9	17.3	20.5	23.8	27.8	7
8	6.7	8.3	9.9	11.7	13.5	12.5	15.6	19.1	22.3	25.9	8
9	6.0	7.5	9.1	10.8	12.6	11.2	14.2	17.5	20.6	24.3	9
10	5.4	6.9	8.4	10.1	11.8	10.0	13.0	16.1	19.1	22.7	10
11	4.8	6.2	7.7	9.3	11.0	9.0	10.7	15.7	17.6	21.1	11
12	4.3	5.6	7.0	8.6	10.2	8.1	10.6	13.5	16.4	19.6	12
13	3.9	5.2	6.5	8.0	9.5	7.3	9.6	12.4	15.1	18.2	13
14	3.5	4.7	6.0	7.4	8.9	6.6	8.8	11.3	14.0	17.0	14
15	3.2	4.3	5.5	6.9	8.3	6.0	8.0	10.4	12.9	15.8	15
16	2.9	4.0	5.1	6.4	7.7	5.5	7.3	9.5	12.0	14.6	16
18	2.4	3.4	4.4	5.6	6.8	4.5	6.0	8.0	10.3	12.7	18
20	2.0	2.8	3.7	4.7	5.8	3.8	5.1	6.8	8.7	11.0	20

Length of Tube in Feet.	Thickness of Iron ¼ Inch. External Diameter in Ins.					Thickness of Iron ½ Inch. External Diameter in Ins.					Length of Tube in Feet.
	3½	4	4½	5	6	7	8	9	10	12	
	Tons.	Tons.	Tons.	Tons.	Tons.	Tons.	Tons.	Tons.	Tons.	Tons	
1	40	47	53	60	72	166	189	214	238	290	2
2	40	47	53	60	72	163	186	212	237	289	4
3	39	46	52	59	71	158	184	210	235	288	6
4	38	45	51	58	71	154	181	207	232	284	8
5	37	44	50	57	70	149	176	203	228	280	10
6	36	43	49	56	69	143	171	199	224	276	12
7	34	41	47	54	68	137	165	194	219	272	14
8	32	40	46	53	67	131	160	187	213	268	16
9	30	38	44	51	65	124	153	180	207	263	18
10	29	37	43	50	64	117	145	173	201	257	20
11	27	35	41	48	62						
12	26	33	40	46	61						
13	24	31	38	44	59						
14	23	30	36	43	57						
15	21	28	34	41	55						
16	20	27	33	40	54						
18	18	24	30	37	50						
20	16	21	27	34	47						

The breaking loads for less thickness may safely be assumed to diminish at the same rate as the thickness.

Wrought iron columns shorten at the average rate of about ⅛ inch in 30 feet, under loads of 4 tons per square inch of metal cross-section; and cast iron ones average about twice as much.

For lengths up to about 25 times the diameter, cast iron columns are stronger than wrought iron ones; but for longer lengths wrought iron are the stronger. In fixing a column it is important to equalize the pressure over every part of the top and bottom of it.

TABLE OF LONG CHORDS.

DEGREE OF CURVE.	200 FEET.	300 FEET.	400 FEET.	500 FEET.	600 FEET.
° ′					
0 10	200.000	299.999	399.998	499.996	599.993
20	199.999	.997	.992	.983	.970
30	.998	.992	.981	.962	.933
40	.997	.986	.966	.932	.882
50	.995	.979	.947	.894	.815
1 0	199.992	299.978	399.924	499.848	599.733
10	.990	.959	.896	.793	.637
20	.986	.946	.865	.729	.526
30	.983	.932	.829	.657	.401
40	.979	.915	.789	.577	.260
50	.974	.898	.744	.488	.105
2 0	199.970	299.878	399.695	499.391	598.934
10	.964	.857	.643	.285	.750
20	.959	.834	.586	.171	.550
30	.952	.810	.524	.049	.336
40	.946	.783	.459	498.918	.106
50	.939	.756	.389	.778	597.862
3 0	199.931	299.726	399.315	498.630	597.604
10	.924	.695	.237	.474	.331
20	.915	.662	.154	.309	.043
30	.907	.627	.068	.136	596.740
40	.898	.591	398.977	497.955	.423
50	.888	.553	.882	.765	.091
4 0	199.878	299.513	398.782	497.566	595.744
10	.868	.471	.679	.360	.383
20	.857	.428	.571	.145	.007
30	.846	.383	.459	496.921	594.617
40	.834	.337	.343	.689	.212
50	.822	.289	.223	.449	593.792
5 0	199.810	299.239	398.099	496.200	593.358
10	.797	.187	397.970	495.944	592.909
20	.783	.134	.837	.678	.446
30	.770	.079	.700	.405	591.968
40	.756	.023	.559	.123	.476
50	.741	298.964	.413	494.832	590.970
6 0	199.726	298.904	397.264	494.534	590.449
10	.710	.843	.110	.227	589.914
20	.695	.779	396.952	493.912	.364
30	.678	.714	.790	.588	588.800
40	.662	.648	.623	.257	.221
50	.644	.579	.453	492.917	587.028
7 0	199.627	298.509	396.278	492.568	587.021
10	.609	.438	.099	.212	586.400
20	.591	.364	395.916	491.847	585.765
30	.572	.289	.729	.474	.115
40	.553	.212	.538	.093	584.451
50	.533	.134	.342	490.704	583.773
8 0	.513	298.054	395.142	490.306	583.081

Radii, Ordinates and Deflections of Railroad Curves.

DEGREE.	RADII.	ORDINATES.				TANGENT DEFLECTION.	CHORD DEFLECTION.
		12½	25	37½	50		
° ′							
0 10	34377.48	.016	.027	.034	.036	.145	.291
20	17188.76	.032	.055	.068	.073	.291	.582
30	11459.19	.048	.082	.102	.109	.436	.873
40	8594.41	.064	.109	.136	.145	.582	1.164
50	6875.55	.080	.136	.170	182	.527	1.454
1 0	5729.65	.095	.164	.205	218	.573	1.745
10	4911.15	.111	.191	.239	.255	1.018	2 036
20	4297.28	.127	218	.273	.291	1.164	2.327
30	3819.83	.143	.245	.307	.327	1.309	2.618
40	3437.87	.159	.273	.341	.364	1.454	2 909
50	3125.36	.175	.300	.375	.400	1.600	3.200
2 0	2864.93	.191	.327	.409	.436	1.745	3.490
10	2644.58	.207	.355	.443	.473	1.891	3.781
20	2455.70	.223	.382	.477	.509	2.036	4.072
30	2292.01	.239	.409	.511	.545	2.181	4.363
40	2148.79	.255	.436	.545	.582	2.327	4.654
50	2022.41	.270	.464	.580	.618	2.472	4.945
3 0	1910.08	.286	.491	614	.655	2.618	5.235
10	1809.57	.302	.518	.648	.691	2.763	5.526
20	1719.12	.318	.545	.682	.727	2.908	5.817
30	1637.28	.334	.573	.716	.764	3.054	6.108
40	1562.88	.350	.600	.750	.800	3.199	6.398
50	1494.95	366	.627	.784	.836	3.345	6.689
4 0	1432.69	.382	.655	318	.873	3.490	6.980
10	1375.40	.398	.682	352	.909	3.635	7.271
20	1322.53	.414	.709	.886	.945	3.781	7.561
30	1273.57	.430	.736	.921	.982	3.926	7.852
40	1228.11	.446	.764	.955	1.018	4.071	8.143
50	1185.78	.462	.791	.989	1.055	4.217	8.433
5 0	1146.28	.477	.818	1.023	1.091	4.362	8.724
10	1109.33	.493	.846	1.057	1.127	4.507	9.014
20	1074.68	.509	.873	1.091	1.164	4.653	9.305
30	1042.14	.525	.900	1.125	1.200	4.798	9.596
40	1011.51	.541	.928	1.159	1.237	4.943	9.886
50	982.64	.557	.955	1.193	1.273	5.088	10.177
6 0	955.37	.573	.982	1.228	1.309	5.234	10.467
10	929.57	.589	1.009	1.262	1.346	5.379	10.758
20	905.13	.605	1.037	1.296	1.382	5.524	11.048
30	881.95	.621	1.064	1.330	1.418	5.669	11.339
40	859.92	.637	1.091	1.364	1.455	5.814	11.629
50	838.97	.653	1.118	1.398	1.491	5.960	11.919
7 0	819.02	.669	1.146	1.432	1.528	6.105	12.210
10	800.00	.685	1.173	1.466	1.564	6.250	12.500
20	781.84	.701	1.200	1.501	1.600	6.395	12.790
30	764.49	.717	1.228	1.535	1.637	6.540	13.081
40	747.89	.733	1.255	1.569	1.673	6.685	13.371
50	732 01	.748	1.283	1.603	1.710	6.831	13.661
8 0	716.78	.764	1.310	1.637	1.746	6.976	13.951
10	702.18	.780	1.337	1.671	1.782	7.121	14.241
20	688.16	.796	1.365	1.705	1.819	7.266	14.532
30	674.69	.812	1.392	1.739	1.855	7.411	14.822
40	661.74	.828	1.419	1.774	1.892	7.566	15.112
50	649.27	.844	1.447	1 808	1.928	7.701	15.402

RAILROAD CURVES.

ELEVATION OF THE OUTER RAIL OF CURVES.

DEGREE OF CURVE.	SPEED OF TRAIN IN MILES PER HOUR.					
	15	20	25	30	40	50
1	.012	.022	.034	.049	.088	.137
2	.025	.044	.068	.099	.175	.274
3	.037	.066	.102	.148	.263	.411
4	.049	.088	.137	.197	.361	.548
5	.062	.110	.171	.247	.438	.685
6	.074	.131	.205	.296	.526	.822
7	.086	.153	.240	.345	.613	.958
8	.099	.175	.274	.394	.701	1.095
9	.111	.197	.308	.443	.788	1.232
10	.123	.219	.342	.493	.876	1.368

CHANNEL BARS.

DESIGNATION.	WEIGHT PER FOOT. Pounds.	AREA OF SECTION. Square Inch.	THICKNESS OF WEB. Inches.	WIDTH OF FLANGE. Inches.
15″ Light,	40.	12.00	.525	3.53
15″ Heavy,	60.	18.00	.925	3.93
12″ One weight,	20.	6.00	.318	3.01
12″ Light,	22.5	6.75	.324	3.01
12″ Heavy,	30.	9.00	.512	3.20
12″ Light,	30.	9.00	.457	2.71
12″ Heavy,	50.	15.00	.957	3.21
10″ One weight,	16.	4.80	.329	2.52
10″ Light,	17.5	5.25	.300	2.43
10″ Heavy,	30.	9.00	.675	2.80
10″ Light,	20.	6.00	.305	2.56
10″ Heavy,	35.	10.50	.755	3.01
9″ One weight,	14.5	4.35	.316	2.50
9″ Light,	18.	5.40	.305	2.43
9″ Heavy,	30.	9.00	.705	2.83
8″ Light,	12.5	3.75	.264	2.01
8″ Heavy,	15 5	4.65	.376	2.13
8″ Light,	16.	4.80	.303	2.30
8″ Heavy,	28.	8.40	.753	2.75
7″ Light,	10.5	3.15	.247	2.00
7″ Heavy,	13.5	4.05	.375	2.13
7″ Light,	14.	4.20	.296	2.30
7″ Heavy,	20.	6.00	.554	2.55
6″ Light,	7.5	2.25	.196	1.76
6″ Heavy,	9.5	2.85	.296	1.86
6″ Light,	10.	3.00	.227	1.98
6″ Heavy,	16.	4.80	.527	2.28
5″ Light,	6.5	1.95	.219	1.66
5″ Heavy,	8.5	2.55	.339	1.78
5″ Light,	9.	2.70	.245	1.93
5″ Heavy,	14.	4.20	.545	2.23
4″ Light,	6.	1.80	.246	1.62
4″ Heavy,	7.	2.10	.321	1.70
4″ Light,	7.	2.10	.244	1.74
4″ Heavy,	9.	2.70	.384	1.89
3″ Light,	5.	1.50	.199	1.51
3″ Heavy,	6.	1.80	.299	1.61

HYDRAULIC CEMENT.

Trautwine defines hydraulic cement as follows: Burnt stone finely ground, and possessing the property of hardening under water.

Hydraulic cements are both artificial and natural. The former are embraced under the name of "Portland Cement," while the latter are generally known under the name of "Louisville Cement."

The composition of English Portland cement averages as follows:

Lime	59.47
Soluble Silica	23.63
Insoluble	1.17
Alumina and Ferric Oxide	10.87
Carbonic Anhydride	1.00
Sulphuric Anhydride	1.65
Alkalies, moisture, etc.	2.21
	100.00

An imperial bushel of best cement, freshly ground, passing through an 80 mesh sieve and leaving 10 per cent. residue, weighs 110 lbs.

"	"	20	"	"	"	116	"
"	"	25	"	"	"	121	"
"	"	35	"	"	"	123	"

All cement increases in bulk with age, therefore the weight per bushel becomes proportionately lighter.

An imperial bushel of cement, which weighed when

One day old	117	reweighed.
One month later	113	"
Two months later	108	"
Twelve months later	103	"

When weight per bushel is specified it can only be ascertained by weighing the whole bushel, to weigh a given part and then multiply will not give a correct result. As fineness of grinding is a most important factor in the strength of concrete, the following degrees of fineness should be at least required:

For ordinary purposes to leave under 10 per cent. residue on 2,500 mesh sieve.

For special work to leave under 10 per cent. residue on 6,500 mesh sieve.

The London Board of Works requires not more than 20 per cent. of residue should be left on a sieve of 5,766 holes to the square inch.

The specific gravity of best Portland cement is never below 3.02.

A barrel of Portland cement weighs on average 400 pounds, and contains about 3½ bushels, or, measured loose, 4.25 cubic feet.

Average Analysis of American Portland Cement.

Silica	20.75	per cent.
Alumina and Oxide of Iron	13.50	"
Lime	62.25	"
Magnesia	0.25	"
Sulphuric Acid	0.25	"
Potash	1.50	"
Soda	0.75	"
Oxide of Manganese	0.20	"
Water	0.26	"
Carbonic Acid	0.21	"

A barrel of American Portland cement weighs 400 lbs. gross, 385 lbs. net, nearly 4¼ cubic feet loose.

1 cubic foot neat, loose, weighs about 92 lbs.

1 cubic foot of concrete, dry, weighs 150 to 160 lbs.

1 barrel of American Portland cement of 400 lbs. has the capacity to cover when used with one barrel of sand:

67 square feet, 1 inch thick.
90 " " ¾ " "
134 " " ½ " "

When used with two barrels of sand:

104 square feet, 1 inch thick.
139 " " ¾ " "
208 " " ½ " "

When used with 3 barrels of sand:

140 square feet, 1 inch thick.
187 " " ¾ " "
280 " " ½ " "

Proportions for Mixing Concrete With American Portland Cement.

CEMENT.	SAND.	BROKEN STONE UP TO 2″ DIAMETER.
1 part	2 parts	4 parts.
1 "	3 "	6 "
1 "	4 "	8 "
1 "	5 "	10 "
1 "	6 "	12 "

LOUISVILLE (NATURAL) CEMENT.

Analysis of Louisville Cement.

	PER CENT.
Water	1.16
Silica and Insoluble matter	21.10
Alumina and Oxide of Iron	7.51
Calcium Oxide	30.16
Calcium Carbonate	25.42
Magnesium Oxide	7.00
Sulphate of Calcium	6 85
Alkalies and loss	.80
	100.00

A barrel of Louisville cement weighs 265 lbs. net, averaging about 4½ cubic feet, or the sixth part of a cubic yard, loose.

A cubic foot of neat cement, loose, weighs 55 to 60 lbs.

1 car load of American Portland cement means 100 barrels (40,000 lbs).

A minimum car load means 24,000 lbs , or 60 barrels of 400 lbs. each.

Or, 253 Burlap sacks of 95 lbs. each.

Or, 253 paper sacks of 95 lbs. each.

The addition of one ounce of salt for every degree of temperature less than 30 degrees Fahr. to a mixture of 18 gallons of water and one pound of salt, is supposed to keep mortar from freezing.

A cubic foot of concrete (cement, sand and stone), dry, weighs 130 to 160 pounds.

A cubic foot of concrete, one part cement and two parts sand, by bulk, tamped solid, requires about 36 pounds of cement.

A cubic foot of concrete, equal bulk of cement and sand, tamped solid, requires about 48 pounds cement.

A car load of Louisville cement usually means 100 barrels in barrels, or the cement contained in 180 grain bags, or in 400 paper bags.

The weight of a car load of cement in barrels, is 28,500 pounds; in grain bags, or paper sacks, 30,000 pounds.

Concrete.

Sand and gravel	8 parts.
Common earth burnt and powdered	1 "
Burnt cinders	1 "
Unslacked hydraulic lime	1½ "

These materials are thoroughly beaten up together, their mixture giving a concrete which sets almost immediately, and in a few days becomes extremely hard and solid.

Good concrete can be made from clean gravel and sand, river ballast, stone chippings, burnt clay, shingle, broken bricks, crushed flints, etc., ect., and the proportion generally adopted by engineers is one of Portland cement to eight of these or similar materials, technically termed the aggregate.

Plastering and Stucco Work.

One barrel of Portland cement will cover:

38 square feet, 1 inch thick.
56 " " ¾ " "
75 " " ½ " "

One barrel of Portland cement and one of sand will cover:

76 square feet, 1 inch thick.
100 " " ¾ " "
150 " " ½ " "

One barrel of Portland cement and two of sand will cover:

112 square feet, 1 inch thick.
150 " " ¾ " "
225 " " ½ " "

Cement, Concrete and Brick Work.

CEMENT.	THICKNESS.		
	1 IN.	¾ IN.	½ IN.
1 bushel of cement will cover	1⅛ yds.	1½ yds.	2¼ yds.
1 bushel of cement and 1 of sand will cover.	2¼ "	3 "	4½ "
1 bushel of cement and 2 of sand will cover.	3½ "	4½ "	6¾ "

CEMENT.	THICKNESS.		
	1 IN.	¾ IN.	½ IN.
1 barrel of cement will cover	38 feet.	56 feet.	75 feet.
1 barrel of cement and 1 of sand will cover.	76 "	100 "	150 "
1 barrel of cement and 2 of sand will cover.	112 "	150 "	225 "

Brickwork.

1½ barrels cement,

3 barrels good sand will make sufficient good cement mortar to lay 1,000 brick.

Concrete.

1 barrel of cement,

2 barrels of clean, sharp sand,

5 barrels broken stone, or hard burnt bricks, clean gravel, or shingle, will yield about 20 cubic feet.

According to tests made with hydraulic cements, briquettes of pure Portland cement, unmixed with sand, gave a tensile strength of from 450 to 560 pounds per square inch, after being 7 days in water; and from 500 to 600 pounds per sqare inch, after being 30 days in water.

Natural cements under the same conditions gave a tensile strength of from 330 to 350 pounds per square inch.

Cement for Repairing Broken Rocks, Minerals or Fossils.

Take 2 ounces of clear gum arabic, 1½ ounces of fine starch, ½ ounce white sugar. Pulverize the gum arabic and dissolve it in as much water as a laundress would use for the quantity of starch indicated. Dissolve the starch and sugar in the gum solution.

Then cook the mixture in a vessel suspended in boiling water until the starch becomes clear. The cement should be as thick as tar and kept so. To keep from spoiling, drop in a lump of gum camphor, or a little oil of cloves or sassafras.

Cement.

For cementing iron railing tops, iron grating, etc., use a mixture composed of equal parts of sulphur and white lead, with about one-sixth part of borax, the three being thoroughly mixed together. When it is to be applied, wet the mixture with strong sulphuric acid, place a thin layer between the parts and press them together. It will take about 5 days for the cement to become perfectly dry.

WROUGHT IRON LAP WELDED CASING.

For Artesian, Salt and Oil Wells.

TABLE OF STANDARD DIMENSIONS.

Nominal Internal Diameter.	Actual External Diameter.	Approx. Weight per Foot.	Nominal Internal Diameter.	Actual External Diameter.	Approx. Weight per Foot.	Nominal Internal Diameter.	Actual External Diameter	Approx. Weight per Foot.
Ins.	Ins.	Pounds.	Ins.	Ins.	Pounds.	Ins.	Ins.	Pounds.
1½	1.75	1.66	3¼	3.5	4.27	5	5.25	7.66
1¾	2.	1 91	3½	3.75	4.59	5 3/16	5.5	8.08
2	2.25	2.23	3¾	4.	5.32	5⅝	6.	9.35
2¼	2.5	2.75	4	4.25	5.50	6¼	6.625	10.06
2½	2.75	3 04	4¼	4.5	6.01	6⅝	7.	12.44
2¾	3.	3.33	4½	4.75	6.5	7⅝	8.	15.10
3	3.25	3 95	4¾	5	7.23	8¼	8.625	16.15

WELL CASING.

Inserted Joint, and Uniform Inside Diameter.

NOMINAL INSIDE DIAMETER.	ACTUAL OUTSIDE DIAMETER.	NOMINAL WEIGHT PER FOOT.	NO. OF THREADS PER IN. OF SCREW.
Inches.	Inches.	Pounds.	
2	2¼	2.23	14
2¼	2½	2.75	14
2½	2¾	3.00	14
2¾	3	3.33	14
3	3¼	3.95	14
3¼	3½	4.27	14
3½	3¾	4.60	14
3¾	4	5.33	14
4	4¼	5.50	14
4¼	4½	6.00	14
4½	4¾	6.50	14
4¾	5	7.25	14
5	5¼	7.66	14
5 3/16	5½	8.08	14
5⅝	6	9.35	14
6¼	6⅝	10 06	14
6⅝	7	12 45	14
7¼	7⅝	13 50	14
7⅝	8	15.10	11½
8¼	8⅝	16.15	11½
8⅝	9	17.25	11½
9⅝	10	19 00	11½
10⅜	10¾	21.50	11½
10⅝	11	21.97	11½
11⅝	12	23.86	11½
12½	13	33.50	11½
13½	14	37.50	11½
14½	15	42.10	
15½	16	46.70	

Shrinkage of Castings.

Iron, small cylinders.....$\frac{1}{16}$ inch per foot.
" pipes.....1/8 " " "
" girders, beams, etc.....1/8" in 15"
" large cylinders, the contraction of diameter at top.....$\frac{1}{16}$" per foot.
" large cylinders, the contraction of diameter at bottom.....$\frac{1}{12}$" " "
" large cylinders, contraction in length.....1/8" in 16"
Brass, thin.....1/8" in 9"
" thick.....1/8" in 10"
Zinc.....$\frac{5}{16}$" in a foot.
Lead.....$\frac{5}{16}$" " "
Copper.....$\frac{3}{16}$" " "
Bismuth.....$\frac{5}{32}$" " "

Table of Composition of Combustibles.

ELEMENTS.	COAL.	COKE.	WOOD.			PEAT.		NAPHTHA.
			PERFECTLY DRY.	ORDINARY STATE.	CHARCOAL.	PERFECTLY DRY.	ORDINARY STATE.	
Carbon	.812	.850	.510	.408	.930	.580	.464	.850
Hydrogen	.048	.....	.053	.042	.....	.060	.048	.150
Oxygen	.054	.....	.417	.334	.....	.310	.248	.....
Nitrogen and Sulphur	.031	.....	.....	.....	.....	.....	.....	.....
Water	.....	.....	.....	2.00	.....	.....	.200	.....
Ashes	.055	.150	.020	.016	.070	.050	.040	.....
Total	1.000	1.000	1.000	1.000	1.000	1.000	1 000	1.000

Table of Conducting Power of Various Substances.

SUBSTANCE.	CONDUCTING POWER.	SUBSTANCE.	CONDUCTING POWER.
Blotting paper	.274	Cork	1.15
Eiderdown	.314	Coke, pulverized	1.29
Cotton or wood, any density	.323	India rubber	1.37
Hemp, canvas	.418	Wood, with fibre	1.40
Mahogany dust	.523	Plaster of Paris	3.86
Wood ashes	.531	Baked clay	4.83
Straw	.563	Glass	6.6
Charcoal powder	.636	Stone	13.68
Wood, across fibre	.83		

A CALENDAR.

For Ascertaining any Day of the Week for any Given Time Within the Present Century.

YEARS 1801 TO 1900.											31 Jan.	28 Feb.	31 March.	30 April.	31 May.	30 June.	31 July.	31 Aug.	30 Sept.	31 Oct.	30 Nov.	31 Dec.
1801	1807	1818	1829	1835	1846	1857	1863	1874	1885	1891	4	7	7	3	5	1	3	6	2	4	7	2
1802	1813	1819	1830	1841	1847	1858	1869	1875	1886	1897	5	1	1	4	6	2	4	7	3	5	1	3
1803	1814	1825	1831	1842	1853	1859	1870	1881	1887	1898	6	2	2	5	7	3	5	1	4	6	2	4
1805	1811	1822	1833	1839	1850	1861	1867	1878	1889	1895	2	5	5	1	3	6	1	4	7	2	5	7
1806	1817	1823	1834	1845	1851	1862	1873	1879	1890	...	3	6	6	2	4	7	2	5	1	3	6	1
1809	1815	1826	1837	1843	1854	1865	1871	1882	1893	1899	7	3	3	6	1	4	6	2	5	7	3	5
1810	1821	1827	1838	1849	1855	1866	1877	1883	1894	1900	1	4	4	7	2	5	7	3	6	1	4	6
LEAP YEARS.											...	29	...	...	...	...	...	...	...	...	...	....
1804	1832	1860	1888								7	3	4	7	2	5	7	3	6	1	4	6
1808	1836	1864	1892								5	1	2	5	7	3	5	1	4	6	2	4
1812	1840	1868	1896								3	6	7	3	5	1	3	6	2	4	7	2
1816	1844	1872	....								1	4	5	1	3	6	1	4	7	2	5	7
1820	1848	1876	....								6	2	3	6	1	4	6	2	5	7	3	5
1824	1852	1880	...								4	7	1	4	6	2	4	7	3	5	1	3
1828	1856	1884	....								2	5	6	2	4	7	2	5	1	3	6	1

To ascertain any day of the week in any year of the present century, first look in the table of years for the year required, and under the months are figs. which refer to the corresponding figs. at the head of the columns of days below. *For example:* To know what day of the week May 4 will be on in the year 1872, in the table of leap years, it being a leap year, look for 1872, and in a parallel line, under May, is Fig. 3, which directs to col. 3, in which it will be seen that May 4 falls on Saturday.

1	2	3	4	5	6	7
Monday.....1	Tuesday ...1	Wed'sday..1	Thursday..1	Friday.....1	Saturday...1	*Sunday*....1
Tuesday.... 2	Wed.....2	Thursday..2	Friday.....2	Saturday...2	*Sunday*.....2	Monday....2
Wednesday..3	Thursday..3	Friday.....3	Saturday...3	*Sunday* 3	Monday....3	Tuesday ...3
Thursday...4	Friday.....4	Saturday...4	*Sunday*.....4	Monday....4	Tuesday....4	Wed.....4
Friday.....5	Saturday. 5	*Sunday* 5	Monday ...5	Tuesday....5	Wed.....5	Thursday..5
Saturday....6	*Sunday* . ..6	Monday ...6	Tuesday....6	Wed 6	Thursday..6	Friday.....6
Sunday.....7	Monday....7	Tuesday ...7	Wed. 7	Thursday..7	Friday.....7	Saturday...7
Monday.... 8	Tuesday ...8	Wed.....8	Thursday..8	Friday.....8	Saturday...8	*Sunday* 8
Tuesday... .9	Wed.....9	Thursday..9	Friday... .9	Saturday...9	*Sunday*....9	Monday....9
Wed'sday...10	Thursday..10	Friday ...10	Saturday ..10	*Sunday*...10	Monday...10	Tuesday ..10
Thursday..11	Friday....11	Saturday..11	*Sunday*....11	Monday...11	Tuesday...11	Wed.....11
Friday.....12	Saturday..12	*Sunday* ...12	Monday...12	Tuesday..12	Wed 12	Thursday.12
Saturday...13	*Sunday* ...13	Monday...13	Tuesday..13	Wed.....13	Thursday.13	Friday....13
Sunday 14	Monday...14	Tuesday..14	Wed.....14	Thursday.14	Friday....14	Saturday..14
Monday....15	Tuesday...15	Wed.....15	Thursday.15	Friday....15	Saturday..15	*Sunday*....15
Tuesday....16	Wed 16	Thursday.16	Friday....16	Saturday..16	*Sunday*...16	Monday...16
Wed'sday..17	Thursday.17	Friday....17	Saturday..17	*Sunday*...17	Monday...17	Tuesday..17
Thursday..18	Friday... 18	Saturday..18	*Sunday*...18	Monday...18	Tuesday..18	Wed 18
Friday.....19	Saturday..19	*Sunday*... 19	Monday...19	Tuesday..19	Wed.... ..19	Thursday.19
Saturday...20	*Sunday*...20	Monday ..20	Tuesday..20	Wed 20	Thursday.20	Friday....20
Sunday.....21	Monday...21	Tuesday..21	Wed.....21	Thursday.21	Friday....21	Saturday..21
Monday....22	Tuesday..22	Wed.....22	Thursday.22	Friday....22	Saturday..22	*Sunday* ...22
Tuesday....23	Wed..... 23	Thursday.23	Friday. ..23	Saturday..23	*Sunday* ...23	Monday...23
Wed'sday..24	Thursday.24	Friday....24	Saturday..24	*Sunday*...24	Monday ..24	Tuesday..24
Thursday..25	Friday....25	Saturday..25	*Sunday* ..25	Monday...25	Tuesday...25	Wed.....25
Friday.....26	Saturday...26	*Sunday* ...26	Monday.. 26	Tuesday..26	Wed.....26	Thursday.26
Saturday...27	*Sunday*...27	Monday . .27	Tuesday...27	Wed 27	Thursday.27	Friday... 27
Sunday.... 28	Monday...28	Tuesday...28	Wed 28	Thursday.28	Friday....28	Saturday..28
Monday....29	Tuesday ..29	Wed 29	Thursday.29	Friday....29	Saturday..29	*Sunday* ...29
Tuesday....30	Wed 30	Thursday.30	Friday....30	Saturday..30	*Sunday* ...30	Monday ..30
Wed'sday..31	Thursday.31	Friday....31	Saturday . 31	*Sunday*....31	Monday...31	Tuesday ..31

A Car Load is, say

70 bbls. Salt.	85 head Sheep.	360 bush. Corn.
70 bbls. Lime.	9 M. ft. Boards (soft).	680 bush. Oats.
90 bbls. Flour.	17 M. ft. Siding.	400 bush. Barley.
60 bbls. Whiskey.	13 M. ft. Flooring.	360 bush. Seed.
6 cords Hard Wood.	40 M. ft. Shingles.	430 bush. Potatoes.
18 head Cattle.	340 bush. Wheat.	1,000 bush. Bran.

Table of Decimal Equivalents.

8THS, 16THS, 32DS AND 64THS OF AN INCH.

8ths.

$\frac{1}{8} = .125$
$\frac{1}{4} = .25$
$\frac{3}{8} = .375$
$\frac{1}{2} = .50$
$\frac{5}{8} = .625$
$\frac{3}{4} = .75$
$\frac{7}{8} = .875$

16ths.

$\frac{1}{16} = .0625$
$\frac{3}{16} = .1875$
$\frac{5}{16} = .3125$
$\frac{7}{16} = .4375$
$\frac{9}{16} = .5625$
$\frac{11}{16} = .6875$
$\frac{13}{16} = .8125$
$\frac{15}{16} = .9375$

32ds.

$\frac{1}{32} = .03125$
$\frac{3}{32} = .09375$
$\frac{5}{32} = .15625$
$\frac{7}{32} = .21875$
$\frac{9}{32} = .28125$
$\frac{11}{32} = .34375$
$\frac{13}{32} = .40625$
$\frac{15}{32} = .46875$
$\frac{17}{32} = .53125$
$\frac{19}{32} = .59375$
$\frac{21}{32} = .65625$
$\frac{23}{32} = .71875$
$\frac{25}{32} = .78125$
$\frac{27}{32} = .84375$
$\frac{29}{32} = .90625$
$\frac{31}{32} = .96875$

64ths.

$\frac{1}{64} = .015625$
$\frac{3}{64} = .046875$
$\frac{5}{64} = .078125$
$\frac{7}{64} = .109375$
$\frac{9}{64} = .140625$
$\frac{11}{64} = .171875$
$\frac{13}{64} = .203125$
$\frac{15}{64} = .234375$
$\frac{17}{64} = .265625$
$\frac{19}{64} = .296875$
$\frac{21}{64} = .328125$
$\frac{23}{64} = .359375$
$\frac{25}{64} = .390625$
$\frac{27}{64} = .421875$
$\frac{29}{64} = .453125$
$\frac{31}{64} = .484375$
$\frac{33}{64} = .515625$
$\frac{35}{64} = .546875$
$\frac{37}{64} = .578125$
$\frac{39}{64} = .609375$
$\frac{41}{64} = .640625$
$\frac{43}{64} = .671875$
$\frac{45}{64} = .703125$
$\frac{47}{64} = .734375$
$\frac{49}{64} = .765625$
$\frac{51}{64} = .796875$
$\frac{53}{64} = .828125$
$\frac{55}{64} = .859375$
$\frac{57}{64} = .890625$
$\frac{59}{64} = .921875$
$\frac{61}{64} = .953125$
$\frac{63}{64} = .984375$

Stubs' Wire Gauge in Inches.

No. 1..... $\frac{5}{16}$ inch.
" 3..... $\frac{1}{4}$ "
" 7..... $\frac{3}{16}$ "
" 11..... $\frac{1}{8}$ "
" 16..... $\frac{1}{16}$ "
" 21..... $\frac{1}{32}$ "

Table of Decimal Equivalents of Millimeters and Fractions of Millimeters.

$\frac{1}{100}$ mm. = .0003937″.

MM.	INCHES.	MM.	INCHES.	MM.	INCHES
$\frac{1}{50}$ =	.00079	$\frac{26}{50}$ =	.02047	2 =	.07874
$\frac{2}{50}$ =	.00157	$\frac{27}{50}$ =	.02126	3 =	.11811
$\frac{3}{50}$ =	.00236	$\frac{28}{50}$ =	.02205	4 =	.15748
$\frac{4}{50}$ =	.00315	$\frac{29}{50}$ =	.02283	5 =	.19685
$\frac{5}{50}$ =	.00394	$\frac{30}{50}$ =	.02362	6 =	.23622
$\frac{6}{50}$ =	.00472	$\frac{31}{50}$ =	.02441	7 =	.27559
$\frac{7}{50}$ =	.00551	$\frac{32}{50}$ =	.02520	8 =	.31496
$\frac{8}{50}$ =	.00630	$\frac{33}{50}$ =	.02598	9 =	.35433
$\frac{9}{50}$ =	.00709	$\frac{34}{50}$ =	.02677	10 =	.39370
$\frac{10}{50}$ =	.00787	$\frac{35}{50}$ =	.02756	11 =	.43307
$\frac{11}{50}$ =	.00866	$\frac{36}{50}$ =	.02835	12 =	.47244
$\frac{12}{50}$ =	.00945	$\frac{37}{50}$ =	.02913	13 =	.51181
$\frac{13}{50}$ =	.01024	$\frac{38}{50}$ =	.02992	14 =	.55118
$\frac{14}{50}$ =	.01102	$\frac{39}{50}$ =	.03071	15 =	.59055
$\frac{15}{50}$ =	.01181	$\frac{40}{50}$ =	.03150	16 =	.62992
$\frac{16}{50}$ =	.01260	$\frac{41}{50}$ =	.03228	17 =	.66929
$\frac{17}{50}$ =	.01339	$\frac{42}{50}$ =	.03307	18 =	.70866
$\frac{18}{50}$ =	.01417	$\frac{43}{50}$ =	.03386	19 =	.74803
$\frac{19}{50}$ =	.01496	$\frac{44}{50}$ =	.03465	20 =	.78740
$\frac{20}{50}$ =	.01575	$\frac{45}{50}$ =	.03543	21 =	.82677
$\frac{21}{50}$ =	.01654	$\frac{46}{50}$ =	.03622	22 =	.86614
$\frac{22}{50}$ =	.01732	$\frac{47}{50}$ =	.03701	23 =	.90551
$\frac{23}{50}$ =	.01811	$\frac{48}{50}$ =	.03780	24 =	.94488
$\frac{24}{50}$ =	.01890	$\frac{49}{50}$ =	.03858	25 =	.98425
$\frac{25}{50}$ =	.01969	1 =	.03937	26 =	1.02362

10 mm. = 1 Centimeter = 0.3937 inches.
10 cm. = 1 Decimeter = 3.937 "
10 dm. = 1 Meter = 39.37 "
25.4 mm. = 1 English Inch.

Wrought or malleable iron has been known from a period which antedates history, and by several nations.

A wedge of iron has been found in the Great Pyramid; hence it was known in the time of Moses 1500 B. C., and in the time of Cheops 3500 B. C., or still further back in the time of Menes 4400 B. C.

Iron occurs in large deposits in the form of oxide, and constitutes an ingredient of nearly all rocks, soils and natural waters.

Decimal Parts of a Foot for Each 1-64 of an Inch.

Inch.	0″	1″	2″	3″	4″	5″	6″	7″	8″	9″	10″	11″
0	0	.0833	.1667	.2500	.3333	.4167	.5000	.5833	.6667	.7500	.8333	.9167
1/64	.0013	.0846	.1680	.2513	.3346	.4180	.5013	.5846	.6680	.7513	.8346	.9180
1/32	.0026	.0859	.1693	.2526	.3359	.4193	.5026	.5859	.6693	.7526	.8359	.9193
3/64	.0039	.0872	.1706	.2539	.3372	.4206	.5039	.5872	.6706	.7539	.8372	.9206
1/16	.0052	.0885	.1719	.2552	.3385	.4219	.5052	.5885	.6719	.7552	.8385	.9219
5/64	.0065	.0898	.1732	.2565	.3398	.4232	.5065	.5898	.6732	.7565	.8398	.9232
3/32	.0078	.0911	.1745	.2578	.3411	.4245	.5078	.5911	.6745	.7578	.8411	.9245
7/64	.0091	.0924	.1758	.2591	.3424	.4258	.5091	.5924	.6758	.7591	.8424	.9258
1/8	.0104	.0937	.1771	.2604	.3437	.4271	.5104	.5937	.6771	.7604	.8437	.9271
9/64	.0117	.0951	.1784	.2617	.3451	.4284	.5117	.5951	.6784	.7617	.8451	.9284
5/32	.0130	.0964	.1797	.2630	.3464	.4297	.5130	.5964	.6797	.7630	.8464	.9297
11/64	.0143	.0977	.1810	.2643	.3477	.4310	.5143	.5977	.6810	.7643	.8477	.9310
3/16	.0156	.0990	.1823	.2656	.3490	.4323	.5156	.5990	.6823	.7656	.8490	.9323
13/64	.0169	.1003	.1836	.2669	.3503	.4336	.5169	.6003	.6836	.7669	.8503	.9336
7/32	.0182	.1016	.1849	.2682	.3516	.4349	.5182	.6016	.6849	.7682	.8516	.9349
15/64	.0195	.1029	.1862	.2695	.3529	.4362	.5195	.6029	.6862	.7695	.8529	.9362
1/4	.0208	.1042	.1875	.2708	.3542	.4375	.5208	.6042	.6875	.7708	.8542	.9375
17/64	.0221	.1055	.1888	.2721	.3555	.4388	.5221	.6055	.6888	.7721	.8555	.9388
9/32	.0234	.1068	.1901	.2734	.3568	.4401	.5234	.6068	.6901	.7734	.8568	.9401
19/64	.0247	.1081	.1914	.2747	.3581	.4414	.5247	.6081	.6914	.7747	.8571	.9414
5/16	.0260	.1094	.1927	.2760	.3594	.4427	.5260	.6094	.6927	.7760	.8594	.9427
21/64	.0273	.1107	.1940	.2773	.3607	.4440	.5273	.6107	.6940	.7773	.8607	.9440
11/32	.0286	.1120	.1953	.2786	.3620	.4453	.5286	.6120	.6953	.7786	.8620	.9453
23/64	.0299	.1133	.1966	.2799	.3633	.4466	.5299	.6133	.6966	.7799	.8633	.9466
3/8	.0312	.1146	.1979	.2812	.3646	.4479	.5312	.6146	.6979	.7812	.8646	.9479
25/64	.0326	.1159	.1992	.2826	.3659	.4492	.5326	.6159	.6992	.7826	.8659	.9492
13/32	.0339	.1172	.2005	.2839	.3672	.4505	.5339	.6172	.7005	.7839	.8672	.9505
27/64	.0352	.1185	.2018	.2852	.3685	.4518	.5352	.6185	.7018	.7852	.8685	.9518
7/16	.0365	.1198	.2031	.2865	.3698	.4531	.5365	.6198	.7031	.7865	.8698	.9531
29/64	.0378	.1211	.2044	.2878	.3711	.4544	.5378	.6211	.7044	.7878	.8711	.9544
15/32	.0391	.1224	.2057	.2891	.3724	.4557	.5391	.6224	.7057	.7891	.8724	.9557
31/64	.0404	.1237	.2070	.2904	.3737	.4570	.5404	.6237	.7070	.7904	.8737	.9570
1/2	.0417	.1250	.2083	.2917	.3750	.4583	.5417	.6250	.7083	.7917	.8750	.9583
33/64	.0430	.1263	.2096	.2930	.3763	.4596	.5430	.6263	.7096	.7930	.8763	.9596
17/32	.0443	.1276	.2109	.2943	.3776	.4609	.5443	.6276	.7109	.7943	.8776	.9609
35/64	.0456	.1289	.2122	.2956	.3789	.4622	.5456	.6289	.7122	.7956	.8789	.9622
9/16	.0469	.1302	.2135	.2969	.3802	.4635	.5469	.6302	.7135	.7969	.8802	.9635
37/64	.0482	.1315	.2148	.2982	.3815	.4648	.5482	.6315	.7148	.7982	.8815	.9648
19/32	.0495	.1328	.2161	.2995	.3828	.4661	.5495	.6328	.7161	.7995	.8828	.9661
39/64	.0508	.1341	.2174	.3008	.3841	.4674	.5508	.6341	.7174	.8008	.8841	.9674
5/8	.0521	.1354	.2188	.3021	.3854	.4688	.5571	.6354	.7188	.8021	.8854	.9688
41/64	.0534	.1367	.2201	.3034	.3867	.4701	.5534	.6367	.7201	.8034	.8867	.9701
21/32	.0547	.1380	.2214	.3047	.3880	.4714	.5547	.6380	.7214	.8047	.8880	.9714
43/64	.0560	.1393	.2227	.3060	.3893	.4727	.5560	.6393	.7227	.8060	.8893	.9727
11/16	.0573	.1406	.2240	.3073	.3906	.4740	.5573	.6406	.7240	.8073	.8906	.9740
45/64	.0586	.1419	.2253	.3086	.3919	.4753	.5586	.6419	.7253	.8086	.8919	.9753
23/32	.0599	.1432	.2266	.3099	.3932	.4766	.5599	.6432	.7266	.8099	.8932	.9766
47/64	.0612	.1445	.2279	.3112	.3945	.4779	.5612	.6445	.7279	.8112	.8945	.9779
3/4	.0625	.1458	.2292	.3125	.3958	.4792	.5625	.6458	.7292	.8125	.8958	.9792
49/64	.0638	.1471	.2305	.3138	.3971	.4805	.5638	.6471	.7305	.8138	.8971	.9805
25/32	.0651	.1484	.2318	.3151	.3984	.4818	.5651	.6484	.7318	.8151	.8984	.9818
51/64	.0664	.1497	.2331	.3164	.3997	.4831	.5664	.6497	.7331	.8164	.8997	.9831
13/16	.0677	.1510	.2344	.3177	.4010	.4844	.5677	.5510	.7344	.8177	.9010	.9844
53/64	.0690	.1523	.2357	.3190	.4023	.4857	.5690	.6523	.7357	.8190	.9023	.9857
27/32	.0703	.1536	.2370	.3203	.4036	.4870	.5703	.6536	.7370	.8203	.9036	.9870
55/64	.0716	.1549	.2383	.3216	.4049	.4883	.5716	.6549	.7383	.8216	.9049	.9883
7/8	.0729	.1562	.2396	.3229	.4062	.4896	.5729	.6562	.7396	.8229	.9062	.9896
57/64	.0742	.1576	.2409	.3242	.4076	.4909	.5742	.6576	.7409	.8242	.9076	.9909
29/32	.0755	.1589	.2422	.3255	.4089	.4922	.5755	.6589	.7422	.8255	.9089	.9922
59/64	.0768	.1602	.2435	.3268	.4102	.4935	.5768	.6602	.7435	.8268	.9102	.9935
15/16	.0781	.1615	.2548	.3281	.4115	.4948	.5781	.6615	.7448	.8281	.9115	.9948
61/64	.0794	.1628	.2461	.3294	.4128	.4961	.5794	.6628	.7461	.8294	.9128	.9961
31/32	.0807	.1641	.2474	.3307	.4141	.4974	.5807	.6641	.7474	.8307	.9141	.9974
63/64	.0820	.1654	.2487	.3320	.4154	.4987	.5820	.6654	.7487	.8320	.9154	.9987
1												1.0000

To obtain the foot decimal for an inch and fraction of an inch, add together the corresponding decimals, thus, for $7\frac{13}{64}$ inches:

7 inches	.5833
$\frac{13}{64}$	.0169
$7\frac{13}{64}$	.6002

Sizes of Crescent Special Polished Drill Rods and Wire.

COMPARE GAUGE WITH EXACT SIZES GIVEN IN THOUSANDTHS OF AN INCH.

Nos.	Sizes in Decimals of 1 Inch.	Nos.	Sizes in Decimals of 1 Inch.	Nos	Sizes in Decimals of 1 Inch.		Sizes in Decimals of 1 Inch.
1	0.228	16	0.177	31	0.120	46	0.080
2	0.221	17	0.173	32	0.116	47	0.079
3	0.213	18	0.170	33	0.113	48	0.076
4	0.209	19	0.166	34	0.111	49	0.073
5	0.206	20	0.161	35	0.110	50	0.070
6	0 204	21	0.159	36	0.106	51	0.067
7	0.201	22	0.156	37	0.104	52	0.064
8	0.199	23	0.154	38	0.101	53	0.060
9	0.196	24	0.152	39	0.100	54	0.054
10	0 194	25	0.150	40	0.098	55	0.052
11	0.191	26	0.148	41	0.096	56	0.047
12	0 188	27	0.145	42	0 094	57	0 044
13	0 185	28	0.141	43	0.089	58	0.042
14	0.182	29	0.136	44	0 086	59	0 041
15	0.180	30	0.129	45	0 082	60	0 040

LETTER SIZES OF WIRES.

A	0.234	H	0 266	O	0.316	U	0 368
B	0.238	I	0.272	P	0 323	V	0 377
C	0.242	J	0 277	Q	0.332	W	0.386
D	0.246	K	0.281	R	0.339	X	0 397
E	0.250	L	0.290	S	0.348	Y	0.404
F	0.257	M	0 295	T	0 358	Z	0.413
G	0.261	N	0.302				

THE CORRELATION OF FORCES.—Of the various forms of energy existing in nature, any one may be transformed into any other, the one form appearing as the other disappears. This is what is meant by "the correlation of forces." Thus the rotary power of a wheel, if applied to turn a magnet, is converted into electricity; and this electricity, if employed to drive a wheel, is changed back into rotary power.

Twist Drills.

TAP DRILLS.

The following table, showing the different sizes of drills that should be used when a full thread is to be tapped in a hole, is practically correct.

DIAMETER OF TAP.	NO. THREADS TO INCH.			DRILL FOR V THREAD.			DRILL FOR U. S. S. THREAD.	DRILL FOR WHITWORTH THREAD.
1/4	16	18	20	5/32	5/32	11/64	3/16	3/16
9/32	16	18	20	3/16	13/64	13/64		
5/16	16	18		7/32	15/64		1/4	15/64
11/32	16	18		1/4	17/64			
3/8	14	16	18	1/4	9/32	9/32	9/32	9/32
13/32	14	16	18	19/64	21/64	21/64		
7/16	14	16		21/64	11/32		11/32	11/32
15/32	14	16		23/64	3/8			
1/2	12	13	14	3/8	25/64	25/64	13/32	3/8
17/32	12	13	14	13/32	27/64	27/64		
9/16	12	14		7/16	29/64		7/16	
19/32	12	14		15/32	31/64			
5/8	10	11	12	15/32	1/2	1/2	1/2	1/2
21/32	10	11	12	1/2	17/32	17/32		
3/4	10	11	12	19/32	5/8	5/8	5/8	5/8
25/32	10	11	12	5/8	21/32	21/32		
7/8	9	10		45/64	23/32		23/32	23/32
29/32	9	10		47/64	3/4			
1	8			13/16			27/32	27/32
1 1/32	8			53/64				
1 1/8	7	8		29/32	15/16		15/16	15/16
1 5/32	7	8		15/16	31/32			
1 1/4	7			1 1/32			1 1/16	1 1/16
1 9/32	7			1 1/16				
1 3/8	6			1 1/8			1 5/32	1 5/32
1 13/32	6			1 5/32				
1 1/2	6			1 15/64			1 9/32	1 9/32
1 17/32	6			1 9/32				
1 5/8	5	5 1/2		1 9/32	1 5/16		1 3/8	1 23/64
1 21/32	5	5 1/2		1 5/16	1 11/32			
1 3/4	5			1 13/32			1 1/2	1 1/2
1 25/32	5			1 7/16				
1 7/8	4 1/2	5		1 17/32	1 17/32		1 5/8	1 37/64
1 29/32	4 1/2	5		1 9/16	1 9/16			
2	4 1/2			1 21/32			1 23/32	1 45/64

Soldering Salt.

Vessels may be tinned with this salt without previously cleansing their surfaces. It is made by dissolving one pound of zinc in muriatic acid, adding 22 ounces of salammoniac to the solution, and evaporating to dryness; the yield is 2¼ pounds of the double salt. To use it, the salt moistened with water, is brushed on the surface to be tinned, a little solder laid on here and there, and the surface heated until the solder fuses, when it flows wherever the salt was put, and unites with the metallic surface.

To Find the Size of Drill for Drilling a Hole to Tap a Full Standard V Thread.

Rule: Multiply the number of threads per inch by 2 for the denominator of a fraction, for which take three for a numerator.

Subtract this fraction from the diameter of the tap, and the remainder will be the diameter of drill required.

Taper Shank Drills.

DIAMETER.	LENGTH.	SOCKET	DIAMETER.	LENGTH.	SOCKET.
1/4	6 1/8	No. 1,	1 9/32	14 1/8	No. 4,
9/32	6 1/4		1 5/16	14 1/4	
5/16	6 3/8		1 11/32	14 3/8	
11/32	6 1/2		1 3/8	14 1/2	
3/8	6 3/4		1 13/32	14 5/8	
13/32	7		1 7/16	14 3/4	
7/16	7 1/4		1 15/32	14 7/8	
15/32	7 1/2		1 1/2	15	
1/2	7 3/4		1 17/32	15 1/8	
17/32	8		1 9/16	15 1/4	
9/16	8 1/4		1 19/32	15 3/8	
19/32	8 1/2		1 5/8	15 1/2	
5/8	8 3/4	No. 2,	1 21/32	15 5/8	
21/32	9		1 11/16	15 3/4	
11/16	9 1/4		1 23/32	15 7/8	
23/32	9 1/2		1 3/4	16	
3/4	9 3/4		1 25/32	16 1/8	
25/32	9 7/8		1 13/16	16 1/4	
13/16	10		1 27/32	16 3/8	
27/32	10 1/4		1 7/8	16 1/2	
7/8	10 1/2		1 29/32	16 1/2	
29/32	10 5/8		1 15/16	16 1/2	
15/16	10 3/4	No. 3,	1 31/32	16 1/2	
31/32	10 7/8		2	16 1/2	
1	11		2 1/32	16 1/2	No. 5,
1 1/32	11 1/8		2 1/16	17	
1 1/16	11 1/4		2 1/8	17	
1 3/32	11 1/2		2 3/16	17	
1 1/8	11 3/4		2 1/4	17 1/2	
1 5/32	11 7/8		2 5/16	17 1/2	
1 3/16	12		2 3/8	18	
1 7/32	12 1/8		2 7/16	18 1/2	
1 1/4	12 1/2		2 1/2	19	

The only difference in the Morse and the American Taper Shank Drill, lies in the shanks.

A set of Morse drills 1/4 to 1 1/4 requires 3 sockets. The same set American Taper Shank Drills, requires 4 sockets.

The two kinds of drills will not interchange in the sockets.

American and Morse Taper Shank Drills above 1 1/4, have the same size shanks, same taper,, length, etc.

The shanks on drills smaller than $1\frac{9}{32}$ do not correspond.

The American tapers about $\frac{9}{16}$ inch to the foot

The Morse tapers about $\frac{5}{8}$ inch to the foot.

The American system of tapers was originated by the American Fire Arms Co., which went out of business many years ago.

The Speed of Drills.

A feed of one inch in from 95 to 125 revolutions is all that should be required, according to size of the drill. At these speeds it will be necessary to use plenty of oil, or a solution of oil, potash and water, when drilling steel, wrought or malleable iron.

Diameter of Drill.	Speed on Steel.	Speed on Iron.	Speed on Brass.	Diameter of Drill.	Speed on Steel.	Speed on Iron	Speed on Brass.
$\frac{1}{16}$	1150	1750	2000	$1\frac{1}{2}$	45	55	100
$\frac{1}{8}$	575	1000	1200	$1\frac{9}{16}$	45	50	95
$\frac{3}{16}$	425	700	900	$1\frac{5}{8}$	40	50	90
$\frac{1}{4}$	285	450	800	$1\frac{11}{16}$	40	50	85
$\frac{5}{16}$	255	400	650	$1\frac{3}{4}$	40	48	80
$\frac{3}{8}$	210	325	500	$1\frac{13}{16}$	35	48	75
$\frac{7}{16}$	170	175	425	$1\frac{7}{8}$	35	45	65
$\frac{1}{2}$	145	220	375	$1\frac{15}{16}$	30	45	60
$\frac{9}{16}$	135	200	335	2	30	45	55
$\frac{5}{8}$	125	180	315	$2\frac{1}{16}$	30	43	50
$\frac{11}{16}$	115	160	275	$2\frac{1}{8}$	28	40	50
$\frac{3}{4}$	105	130	250	$2\frac{3}{16}$	28	40	45
$\frac{13}{16}$	90	120	205	$2\frac{1}{4}$	28	38	45
$\frac{7}{8}$	80	105	175	$2\frac{5}{16}$	26	38	45
$\frac{15}{16}$	70	95	150	$2\frac{3}{8}$	26	35	40
1	60	90	145	$2\frac{7}{16}$	26	35	40
$1\frac{1}{16}$	60	85	135	$2\frac{1}{2}$	23	32	40
$1\frac{1}{8}$	55	80	130	$2\frac{9}{16}$	23	32	35
$1\frac{3}{16}$	55	75	125	$2\frac{5}{8}$	23	32	35
$1\frac{1}{4}$	55	70	115	$2\frac{3}{4}$	20	30	35
$1\frac{5}{16}$	50	65	110	$2\frac{7}{8}$	20	30	35
$1\frac{3}{8}$	50	60	105	3	20	30	35
$1\frac{7}{16}$	45	55	100				

Length of Flute and Taper of Reamer for Drill Sockets.

NO. OF REAMER.	LENGTH OF FLUTE.	TAPER.
Taper No. 1,	$3\frac{1}{2}$ in	.5415 by .365
Taper No. 2,	$4\frac{1}{2}$ "	.797 " .572
Taper No. 3,	5 "	1.025 " .775
Taper No. 4,	$5\frac{1}{2}$ "	1.303 " 1.021
Taper No. 5,	$5\frac{7}{8}$ "	1.786 " 1.480
Taper No. 6,	9 "	2.597 " 2.139

The taper of Morse, and C. T. D. Co.'s Drill Shanks is, approximately, $\frac{5}{8}$ inch to the foot.

DISCOUNT TABLES.

A discount of 50, 10 and 5 per cent. (erroneously supposed by many to equal 65 per cent.) is equivalent to 57¼ per cent., and the net remainder, 42¾ per cent., is the multiplier with which to ascertain the net price.

Discount Per Cent.	Equivalent.	Net.
25	.25	.75
" & 2½	.26875	.73125
" 2½ & 2½	.2870	.7130
" 2½ 5	.3053	.6947
" 2½ 7½	.3236	.6764
" 2½ 10	.3419	.6581
" 5	.2875	.7125
" 5 2½	.3053	.6947
" 5 5	3231	.6769
" 5 7½	.3409	.6591
" 5 10	.35875	.64125
" 7½	.30625	.69375
" 7½ 2½	.3236	.6764
" 7½ 5	.3409	.6591
" 7½ 7½	.3583	.6417
" 7½ 10	.3756	.6244
" 10	.3250	.6750
" 10 2½	.3419	.6581
" 10 5	.35875	.64125
" 10 7½	.3756	.6244
" 10 10	.3925	.6075
27½	.275	.725
" 2½	.2931	.7069
" 2½ 2½	.3108	.6892
" 2½ 5	.3285	.6715
" 2½ 7½	.3461	.6539
" 2½ 10	.3638	.6362
" 5	.31125	.68875
" 5 2½	.3285	.6715
" 5 5	.3457	.6543
" 5 7½	.3629	.6371
" 5 10	.3801	.6199
" 7½	.3294	.6706
" 7½ 2½	.3461	.6539
" 7½ 5	.3629	.6371
" 7½ 7½	.3797	.6203
" 7½ 10	.3964	.6036
" 10	.3475	.6525
" 10 2½	.3638	.6362
" 10 5	.3801	.6199
" 10 7½	.3965	.6035
" 10 10	.41275	.58725
30	.30	.70
" 2½	.3175	.6825
" 2½ 2½	3346	.6654
" 2½ 5	.3516	.6484
" 2½ 7½	.3687	.6313
" 2½ 10	.38575	.61425
" 5	.335	.665
" 5 2½	.3516	.6484
" 5 5	.36825	.63175
" 5 7½	.3849	.6151
" 5 10	.4015	.5985
" 7½	.3525	.6475
" 7½ 2½	.3687	.6313
" 7½ 5	3849	.6151
" 7½ 7½	.4009	.5991
" 7½ 10	.41725	.58275
" 10	.37	.63
" 10 2½	.38575	.61425
" 10 5	4016	.5985
" 10 7½	.41725	.58275
" 10 10	.433	.567
32½	.325	.675
" & 2½	.3419	.6581
" 2½ & 2½	.3583	.6417
" 2½ 5	.3748	.6252
" 2½ 7½	.3912	.6088
" 2½ 10	.4077	.5923
" 5	.35875	.64125
" 5 2½	.3748	.6252
" 5 5	.3908	.6092
" 5 7½	.4068	.5932
" 5 10	.4229	.5771
" 7½	.3756	.6244
" 7½ 2½	.3912	.6088
" 7½ 5	.4068	.5932
" 7½ 7½	.4226	.5775
" 7½ 10	.4381	.5619
" 10	.3925	.6075
" 10 2½	.4077	.5923
" 10 5	.4229	5771
" 10 7½	.4381	.5619
" 10 10	.45325	.54675
35	.35	.65
" 2½	.36625	.63375
" 2½ 2½	.3821	.6179
" 2½ 5	.3979	.6021
" 2½ 7½	.4138	.5862
" 2½ 10	.4296	.5704
" 5	.3825	.6175
" 5 2½	.3979	.6021
" 5 5	.4134	.5866
" 5 7½	.4288	.5712
" 5 10	.44425	.55575
" 7½	.39875	.60125
" 7½ 2½	.4138	.5862
" 7½ 5	.4288	.5712
" 7½ 7½	.4438	.5562
" 7½ 10	.4589	.5411
" 10	.415	.585
" 10 2½	.4296	.5704
" 10 5	.44425	.55575
" 10 7½	.4589	.5411
" 10 10	.4735	.5265
37½	.375	.625
" 2½	.3906	.6094
" 2½ 2½	.4059	.5941
" 2½ 5	.4211	.5789
" 2½ 7½	.4363	.5637
" 2½ 10	.4516	.5484
" 5	.40625	.59375
" 5 2½	.4211	.5789
" 5 5	.4359	.5641
" 5 7½	.4508	.5492
" 5 10	.4656	.5344
" 7½	.4219	.5781
" 7½ 2½	.4363	.5637
" 7½ 5	.4508	.5492
" 7½ 7½	.4652	.5348
" 7½ 10	.4797	.5203
" 10	4375	.5625
" 10 2½	.4516	.5484
" 10 5	.4656	.5344
" 10 7½	.4797	.5203
" 10 10	.49375	.50625

DISCOUNT TABLES,

(*Continued.*)

Discount Per Cent.	Equivalent.	Net.
40	.40	.60
" & 2½	.415	.585
" 2½ & 2½	.4296	.5704
" 2½ 5	.44425	.55575
" 2½ 7½	.4589	.5411
" 2½ 10	.4735	.5265
" 5	.46	.57
" 5 2½	.44425	.55575
" 5 5	.4585	.5415
" 5 7½	.47275	.52725
" 5 10	.487	.513
" 7½	.445	.555
" 7½ 2½	.4589	.5411
" 7½ 5	.47275	.52725
" 7½ 7½	.4866	.5134
" 7½ 10	.5005	.4995
" 10	.46	.54
" 10 2½	.4735	.5265
" 10 5	.487	.513
" 10 7½	.5005	.4995
" 10 10	.524	.486
42½	.425	.575
" 2½	.4394	.5606
" 2½ 2½	.4534	.5466
" 2½ 5	.4674	.5326
" 2½ 7½	.4814	.5186
" 2½ 10	.4954	.5046
" 5	.45375	.54625
" 5 2½	.4674	.5326
" 5 5	.4811	.5189
" 5 7½	.4947	.5053
" 5 10	.5084	.4916
" 7½	.4681	.5319
" 7½ 2½	.4814	.5186
" 7½ 5	.4947	.5053
" 7½ 7½	.508	.492
" 7½ 10	.5213	.4787
" 10	.4825	.5175
" 10 2½	.4954	.5046
" 10 5	.5084	.4916
" 10 7½	.5213	.4787
" 10 10	.53425	.46575
45	.45	.55
" 2½	.46375	.53625
" 2½ 2½	.4772	.5228
" 2½ 5	.4906	.5094
" 2½ 7½	.504	.496
" 2½ 10	.5174	.4826
" 5	.4775	.5225
" 5 2½	.4906	.5094
" 5 5	.5036	.4964
" 5 7½	.5167	.4833
" 5 10	.52975	.47025
" 7½	.49125	.50875
" 7½ 2½	.504	.496
" 7½ 5	.5167	.4833
" 7½ 7½	.5294	.4706
" 7½ 10	.5421	.4579
" 10	.505	.495
" 10 2½	.5174	.4826
" 10 5	.52975	.47025
" 10 7½	.5421	.4579
" 10 10	.5545	.4455
47½	.475	.525
" 2½	.4881	.5119
" 2½ 2½	.5009	.4991
" 2½ 5	.5137	.4863
" 2½ 7½	.5265	.4735
" 2½ 10	.5393	.4607
47½ & 5	.50125	.49875
" 5 & 2½	.5137	.4863
" 5 5	.5262	.4738
" 5 7½	.5386	.4614
" 5 10	.5511	.4489
" 7½	.5144	.4856
" 7½ 2½	.5265	.4735
" 7½ 5	.5387	.4613
" 7½ 7½	.5508	.4492
" 7½ 10	.5629	.4371
" 10	.5275	.4725
" 10 2½	.5393	.4607
" 10 5	.5511	.4489
" 10 7½	.5629	.4371
" 10 10	.57475	.42525
50	.50	.40
" 2½	.5125	.4875
" 2½ 2½	.5247	.4753
" 2½ 5	.5369	.4631
" 2½ 7½	.5491	.4509
" 2½ 10	.56125	.43875
" 5	.525	.475
" 5 2½	.5369	.4631
" 5 5	.54875	.45125
" 5 7½	.5606	.4394
" 5 10	.5725	.4275
" 7½	.5375	.4625
" 7½ 2½	.5491	.4509
" 7½ 5	.5606	.4394
" 7½ 7½	.5722	.4278
" 7½ 10	.58375	.41625
" 10	.55	.45
" 10 2½	.56125	.43875
" 10 5	.5725	.4275
" 10 7½	.58375	.41625
" 10 10	.595	.405
52½	.525	.475
" 2½	.5369	.4631
" 2½ 2½	.5485	.4515
" 2½ 5	.56	.44
" 2½ 7½	.5716	.4284
" 2½ 10	.5832	.4168
" 5	.54875	.45125
" 5 2½	.56	.44
" 5 5	.5713	.4287
" 5 7½	.5826	.4174
" 5 10	.5939	.4061
" 7½	.5606	.4394
" 7½ 2½	.5716	.4284
" 7½ 5	.5826	.4174
" 7½ 7½	.5936	.4064
" 7½ 10	.6046	.3954
" 10	.5725	.4275
" 10 2½	.5832	.4168
" 10 5	.5939	.4061
" 10 7½	.6046	.3954
" 10 10	.61525	.38475
55	.55	.45
" 2½	.56125	.43875
" 2½ 2½	.5722	.4278
" 2½ 5	.5832	.4168
" 2½ 7½	.5942	.4058
" 2½ 10	.6051	.3949
" 5	.5725	.4275
" 5 2½	.5832	.4168
" 5 5	.5939	.4061
" 5 7½	.6046	.3954
" 5 10	.61525	.38475

DISCOUNT TABLES.

(*Continued.*)

Discount Per Cent.			Equivalent.	Net.
55 &	7½		.58375	.41625
"	7½ &	2½	.5942	.4058
"	7½	5	.6046	.3954
"	7½	7½	.615	.385
"	7½	10	.6254	.3746
"	10		.595	.405
"	10	2½	.6051	.3949
"	10	5	.61525	.38475
"	10	7½	.6254	.3746
"	10	10	.6355	.3645
57½			.575	.425
"	2½		.5856	.4144
"	2½	2½	.596	.404
"	2½	5	.6063	.3937
"	2½	7½	.6167	.3833
"	2½	10	.6271	.3729
"	5		.59625	.40375
"	5	2½	.6063	.3937
"	5	5	.6164	.3836
"	5	7½	.6265	.3735
"	5	10	.6366	.3634
"	7½		.6069	.3931
"	7½	2½	.6167	.3833
"	7½	5	.6265	.3735
"	7½	7½	.6364	.3636
"	7½	10	.6462	.3538
"	10		.6175	.3825
"	10	2½	.6271	.3729
"	10	5	.6366	.3634
"	10	7½	.6462	.3538
"	10	10	.65575	.34425
60			60	.40
"	2½		.61	.39
"	2½	2½	.61975	.38025
"	2½	5	.6295	.3705
"	2½	7½	.63925	.36075
"	2½	10	.649	.351
"	5		.62	.38
"	5	2½	.6295	.3705
"	5	5	.639	.361
"	5	7½	.6485	.3515
"	5	10	.658	.342
"	7½		.63	.37
"	7½	2½	.63925	.36075
"	7½	5	.6485	.3515
"	7½	7½	.65775	.34225
"	7½	10	.667	.333
"	10		.64	.36
"	10	2½	.649	.351
"	10	5	.658	.342
"	10	7½	.667	.333
"	10	10	.676	.324
62½			.625	.375
"	2½		.6344	.3656
"	2½	2½	.6435	.3565
"	2½	5	.6527	.3473
"	2½	7½	.6618	.3382
"	2½	10	.6709	.3291
"	5		.64375	.35625
"	5	2½	.6527	.3473
"	5	5	.6616	.3384
"	5	7½	.6705	.3295
"	5	10	.6794	.3206
"	7½		.6531	.3469
"	7½	2½	.6618	.3382
"	7½	5	.6705	.3295
"	7½	7½	.6791	.3209
"	7½	10	.6878	.3122

Discount Per Cent			Equivalent.	Net.
62½&	10		.6625	.3375
"	10	2½	.6709	.3291
"	10	5	.6794	.3206
"	10	7½	.6878	.3122
"	10	10	.69625	.30375
65			.65	.35
"	2½		.65875	.34125
"	2½	2½	.6673	.3327
"	2½	5	.6758	.3242
"	2½	7½	.6843	.3157
"	2½	10	.6929	.3071
"	5		.6675	.3325
"	5	2½	.6758	.3242
"	5	5	.6841	.3159
"	6	7½	.6924	.3076
"	5	10	.70075	.29925
"	7½		.67625	.32375
"	7½	2½	.6843	.3157
"	7½	5	.6924	.3076
"	7½	7½	.7005	.2995
"	7½	10	.7086	.2914
"	10		.685	.315
"	10	2½	.6929	.3071
"	10	5	.70075	.29925
"	10	7½	.7086	.2914
"	10	10	.7165	.2835
67½			.675	.325
"	2½		.6831	.3169
"	2½	2½	.691	.309
"	2½	5	.699	.301
"	2½	7½	.7069	.2931
"	2½	10	.7148	.2852
"	5		.69125	.30875
"	5	2½	.699	.301
"	5	5	.7067	.2933
"	5	7½	.7144	.2856
"	5	10	.7221	.2779
"	7½		.6994	.3006
"	7½	2½	.7069	.2931
"	7½	5	.7144	.2856
"	7½	7½	.7219	.2781
"	7½	10	.7294	.2706
"	10		.7075	.2925
"	10	2½	.7148	.2852
"	10	5	.7221	.2779
"	10	7½	.7294	.2706
"	10	10	.73675	.26325
70			.70	.30
"	2½		.7075	.2925
"	2½	2½	.7148	.2852
"	2½	5	.7221	.2779
"	2½	7½	.7294	.2706
"	2½	10	.73675	.26325
"	5		.715	.285
"	5	2½	.7221	.2779
"	5	5	.72925	.27075
"	5	7½	.7364	.2636
"	5	10	.7435	.2565
"	7½		.7225	.2775
"	7½	2½	.7294	.2706
"	7½	5	.7364	.2636
"	7½	7½	.7433	.2567
"	7½	10	.75025	.24975
"	10		.73	.27
"	10	2½	.73675	.26325
"	10	5	.7435	.2565
"	10	7½	.75025	.24975
"	10	10	.757	.243

DISCOUNT TABLES.

(Continued.)

Discount Per Cent.	Equivalent.	Net.
72½	.725	.275
" & 2½	.7319	.2681
" 2½ & 2½	.7386	.2614
" 2½ 5	.7452	.2548
" 2½ 7½	.752	.248
" 2½ 10	.7587	.2413
" 5	.73875	26125
" 5 2½	.7453	2547
" 5 5	.7518	2482
" 5 7½	.7583	2417
" 5 10	.6749	2351
" 7½	.7456	.2544
" 7½ 2½	.752	.248
" 7½ 5	.7583	.2417
" 7½ 7½	.7647	.2353
" 7½ 10	.7711	.2289
" 10	.7525	.2475
" 10 2½	.7587	.2413
" 10 5	.7649	.2351
" 10 7½	.7711	.2289
" 10 10	.77725	.22275
75	.75	.25
" 2½	.75625	.24375
" 2½ 2½	.76234	.23766
" 2½ 5	.7684	.2316
" 2½ 7½	.7745	.2255
" 2½ 10	.7806	.2194
" 5	.7625	.2375
" 5 2½	.7684	.2316
" 5 5	.7744	.2256
" 5 7½	.7803	.2197
" 5 10	.78625	.21375
75 & 7½	.76875	.23125
" 7½ 2½	.7745	.2255
" 7½ 5	.7803	.2197
" 7½ 7½	.7861	.2139
" 7½ 10	.7919	.2081
" 10	.775	.225
" 10 2½	.7806	.2194
" 10 5	.78625	.21375
" 10 7½	.7919	.2081
" 10 10	.7975	.2025
77½	.776	.225
" 2½	.7806	.2194
" 2½ & 2½	.7861	.2139
" 2½ 5	.7916	.2084
" 2½ 7½	.7971	.2029
" 2½ 10	.8026	.1974
" 5	78625	.21375
" 5 2½	.7916	.2084
" 5 5	.7969	.2031
" 5 7½	.8023	.1977
" 5 10	.8076	.1924
" 7½	.7919	.2081
" 7½ 2½	.7971	.2029
" 7½ 5	.8023	.1977
" 7½ 7½	.8075	.1925
" 7½ 10	.8127	.1873
" 10	.7975	.2025
" 10 2½	.8026	.1974
" 10 5	.8076	.1924
" 10 7½	.8127	.1873
" 10 10	.81775	.18225

Speed of Dies when Cutting Bolts and Pipes.

15 FEET PER MINUTE FOR ACCURATE WORK.		20 FEET PER MINUTE FOR BOLT FACTORIES AND MANUFACTURING WORK.		15 FEET PER MINUTE FOR PIPE.	
⅛	460	⅛	612	⅛	140
¼	230	¼	306	¼	110
5/16	188	5/16	244	⅜	82
⅜	153	⅜	204	½	70
7/16	131	7/16	176	¾	52
½	115	½	153	1¼	33
9/16	102	9/16	136	1½	28
⅝	93	⅝	122	2	23
¾	75	¾	102	2½	19
⅞	65	⅞	88	3	14
1	55	1	76	Use Lard Oil.	
1⅛	50	1⅛	68		
1¼	45	1¼	61		
1⅜	40	1⅜	55		
1½	38	1½	51		
1⅝	35	1⅝	47		
1¾	32	1¾	43		
1⅞	30	1⅞	40		
2	28	2	38		
2⅛	26	2⅛	36		
2¼	25	2¼	34		
2½	22	2½	30		
2¾	20	2¾	28		
3	18	3	25		
Use Lard Oil.		Use Soda or Alkali Water.			

Tapping nuts same speed as cutting bolts.

Table of Proportions of Sizes of Square Solid Dies.

¼ inch	1¼″	square	×	5/16″	thick.
5/16 "	1⅜″	"	×	⅜″	"
⅜ "	1½″	"	×	7/16″	"
7/16 "	1⅝″	"	×	½″	"
½ "	1¾″	"	×	9/16″	"
⅝ "	2″	"	×	1 1/16″	"
¾ "	2¼″	"	×	1 3/16″	"
⅞ "	2½″	"	×	1 5/16″	"
1 "	2¾″	"	×	1 1/16″	"
1⅛ "	3″	"	×	1 3/16″	"
1¼ "	3¼″	"	×	1 5/16″	"

The Almighty Dollar.

One dollar loaned one hundred years at

1	per cent	would amount to	$2.75
3	"	"	19.25
6	"	"	340.00
10	"	"	13,809.00
12	"	"	84,675.00
15	"	"	1,174,405.00
18	"	"	15,145,007.00
24	"	"	2,551,799,404.00

Glycerine Cement.

A valuable cement for general use, stopping leaks in tanks, joining chemical apparatus such as glass and brass; in fact for closing cracks and stopping leaks in almost everything, may be made by mixing commercial glycerine and litharge to the consistency of dough.

It may be somewhat improved by using Portland cement with the litharge—equal parts—when large joints or cracks are to be filled. This will harden under water, and will stand not only a high temperature, but also the action of hydro-carbon vapors.

For Mouth Pieces of Clay Retorts.

Three-fourths fire-clay, one-fourth iron borings. When wanted for use mix with ammoniacal water. Use no sulphur.

Paper Dollars and Coin.

The following table shows the relative value of a currency dollar to coin at different rates of premium from 1 to 100.

The results given are as near as can be approached without the aid of mills.

PREMIUM.	VALUE OF A CURRENCY DOLLAR.	PREMIUM.	VALUE OF A CURRENCY DOLLAR.
101	99	151	66¼
102	98	152	65¾
103	97	153	65⅜
104	96⅛	154	65
105	95¼	155	64½
106	94⅜	156	64⅛
107	93½	157	63⅝
108	92½	158	63¼
109	91¾	159	62⅞
110	90⅞	160	62½
111	90	161	62
112	89¼	162	61⅜
113	88½	163	61⅝
114	87¾	164	61
115	86⅞	165	60⅝
116	86⅛	166	60¼
117	85½	167	59⅞
118	84¾	168	59½
119	84⅛	169	59⅛
120	83⅜	170	58⅙
121	82⅝	171	58½
122	82	172	58⅛
123	81¼	173	57¾
124	80⅝	174	57¼
125	80	175	57⅛
126	79⅜	176	56¾
127	78¾	177	56⅛
128	78¼	178	56⅛
129	77½	179	55¾
130	77	180	55½
131	76⅜	181	55¼
132	75¾	182	55
133	75⅛	183	54¾
134	74⅚	184	54½
135	74	185	54
136	73½	186	53¾
137	73	187	53½
138	72½	188	53¼
139	72	189	53
140	71½	190	52⅚
141	71	191	52⅝
142	70⅜	192	52⅙
143	69⅞	193	51⅞
144	69½	194	51½
145	69	195	51¼
146	68½	196	51
147	68	197	50¾
148	67½	198	50½
149	67	199	50¼
150	66⅔	200	50

EXAMPLE:

What is a paper dollar worth when gold is at a premium of 164?

OPERATION:

164 : 100 :: 100 : $60\frac{10}{41}$. Answer.

EXAMPLE:

When gold is at a premium of 200, what is a paper dollar worth?

200 : 100 :: 100 : 50c. Answer.

To Find the Commercial Value of the Silver in a Standard Silver Dollar, From Day to Day.

RULE:

Multiply the New York quotations, expressed in dollars and cents, or altogether in cents, by .7734⅜, and the product will be the market value of the silver in the dollar, at the time.

To find the exact American value of the London quotation of silver.

RULE:

Multiply the London quotation in pence, or in pence and fractional parts therof, by 2.1921 and the American price at the regular par of exchange will be shown.

EXAMPLE:

If silver is quoted in London at 54 pence per ounce, then the exact American value is 54×2.1921, or $1.18 + per ounce.

Smooth iron discs 40 to 44 inches in diameter, for cutting iron or steel, should be run from 55,000 to 65,000 feet per minute on the periphery.

Discs of these diameters have been run at 85,000 feet per minute.

Steam in contact with the water from which it is formed may be wet or dry, according to circumstances and without reference to the pressure. Dry steam—so called—is steam without any excess of heat and in which there is no water except what is in the form of steam, but since such steam can part with no heat without condensation, and since it usually contains a little water carried off mechanically, it is seldom met with in practice. Superheated steam contains heat in excess of that due to the pressure, which excess of heat may be parted with before condensation results. It is erroneous to suppose that the Heine, the Babcock & Wilcox and other patented boilers deliver superheated steam. The manufacturers make no such claim.

Table Showing the Horse-Power Developed at Different Speeds and Pressures of Steam.

Size of Cylinder.	7 x 10			8 x 10			9 x 12			10 x 12			10 x 14			11 x 14			12 x 16			13 x 16		
Revolutions.	180	200	220	180	200	220	180	200	220	180	200	220	160	180	220	160	180	200	140	160	180	140	160	180
Horse-power with 80 lb. steam	10	12	13	14	15	17	19	21	23	23	26	28	26	28	31	30	34	37	36	40	44	44	49	53
Horse-power with 90 lb. steam	12	13	14	15	17	18	20	23	26	26	28	31	28	31	34	33	37	40	40	44	49	49	53	60
Horse-power with 100 lb. steam	13	14	15	17	18	20	23	25	28	28	31	34	31	34	38	36	40	44	44	49	54	53	60	64

In the above table the fractional parts of horse-power have been dropped, the nearest whole number being sufficiently accurate to illustrate the fact that increased boilure pressure, or increased piston speed, gives increase power.

Horse Power.	Size of Cylinder.		Revolutions per Minute.	Horse Power.	Size of Cylinder.		Revolutions per Minute.	Bore of Cylinder.	Stroke.	Revolutions per Minute.	Piston Speed per minute	Indicated H. P. at 40 lb. Average Piston Pressure.
	Diameter, Inches.	Stroke, Inches.			Diameter Inches.	Stroke Inches.						
4	4	5	250	15	8	8	200	10	16	188	500 ft.	47
5	5	5	225	25	10	10	180	12	16	188	"	68
7	6	6	225	35	12	10	180	13	18	168	"	80
10	7	7	200	45	12	12	180	14	18	167	"	93
15	8	8	200	60	14	12	180	14	20	150	"	93
20	9	9	80	85	15	16	160	16	20	150	"	121
				110	17	16	160	18	24	125	"	154
								20	24	125	"	190
								22	30	100	"	230
								24	30	100	"	274
								24	36	84	"	274
								26	36	84	"	321
								30	42	72	"	425

List of Sizes and Powers of Automatic High Speed Engines. Commercial Rating at 40 Pounds M. E. P.

HORSE POWER.	CYLINDER		REVOLUTIONS PER MINUTE.	PISTON SPEED.	HORSE POWER.	CYLINDER		REVOLUTIONS PER MINUTE.	PISTON SPEED.	HORSE POWER.	CYLINDER		REVS. PER MINUTE.	PISTON SPEED.
	Diameter Inches.	Stroke, Inches.				DIAMETER.	STROKE.				DIAMETER.	STROKE.		
75	10	15	300	750	5	4½″	4″	500	333	5	5″	4″	400	266′
105	12	16	290	773	10	5½″	5″	500	417	10	6″	5″	390	325′
145	14	18	260	780	15	6½″	6″	400	400	15	7″	6″	375	375′
166	15	18	260	780	25	7½″	7″	390	455	25	8″	7″	360	420′
190	16	21	225	787	35	8½″	8″	375	500	35	9″	8″	350	466′
212	17	21	225	787	45	9½″	9″	350	525	50	10″	9″	350	525′
243	18	24	200	800	60	11 ″	10″	320	534					
300	20	24	200	800	75	12 ″	11″	300	550					
310	20	27	181	825	100	13½″	12″	300	600					
380	22	27	181	825	125	14½″	13″	290	628					
460	24	30	170	850	150	15½″	14″	280	653					
540	26	30	170	850	200	18 ″	16″	250	666					
670	28	36	150	900	250	20 ″	16″	250	666					
760	30	36	150	900										

Steam Engine.

When steam is used expansively, under the best conditions, it will give double the power for the same amount of steam that can be got from it worked at full stroke, or without expansion.

When steam is used in non-condensing engines, at low pressure, the loss is great, owing to the pressure of the atmosphere (15 pounds) being a greater percentage of a low than of a high pressure.

The loss for different piston pressures is as follows:

ATMOSPHERE.	STEAM PRESSURE.	TOTAL PRESSURE ON PISTON.	LOSS.
15	5	20	¾
15	10	25	$\frac{3}{5}$
15	15	30	½
15	20	35	$\frac{3}{7}$
15	25	40	⅜
15	30	45	$\frac{3}{9}$

The above table has reference only to the pressure on the piston in the cylinder of the engine, and does not refer to the boiler pressure, as indicated by the steam gauge.

To Find the Area of a Steam Engine Cylinder, the Horse-Power, Steam Pressure and Speed of Piston Being Given.

RULE:

Multiply the number of horse-power by 33,000, and divide the result by the piston speed in feet per minute multiplied by the steam pressure.

The result will be the area of cylinder in square inches, the square root of which will be the diameter of cylinder.

A right hand engine is such that when the engineer stands facing the side of the cylinder, the throttle valve is at his left hand, while the crank is at his right.

An engine is said to run under when the crank pin (being above the center of main shaft) moves toward the cylinder. And it runs over, when the crank pin moves away from the cylinder—being at the same time above the centre of main shaft, as before.

Horse-Power.

To find the actual horse-power of a steam engine.

RULE:

Multiply the diameter of the piston in inches by itself, and this result by .7854, which will give the area of the piston in square inches. Multiply the area so found by the speed of the piston in feet per minute, or, if the speed is taken in inches, divide the product by 12, after multiplying.

Multiply the speed of piston by the mean effective, or average, pressure of steam upon the piston (which can only be determined by applying the indicator), and divide the product by 33,000, which gives the actual horse-power.

Deduct 15 per cent. from the result for friction.

NOTE. The speed of piston is found by multiplying twice the length of stroke by the number of revolutions per minute.

EXAMPLE:

What is the horse-power of an engine, the diameter of cylinder being 8½ inches, stroke of piston 16 inches, revolutions per minute 100, boiler pressure 75 pounds, mean effective pressure on piston 50 pounds?

$8\frac{1}{2}'' \times 8\frac{1}{2}'' \times .7854 = 56.745$ square inches.
$56.745 \times 50 = 2837.25$ pounds.
$16'' \times 2 = 32'' = 2.66$ feet.
2.66 feet $\times$ 100 revolutions $= 266$ feet.
$2837.25 \times 266 = 754708.5$ pounds.
$\frac{754708\ 5}{33{,}000} = 22.86$ horse-power.
$22.86 \times .15 = 3.4290$
22.8600
3.4290
19.4310 horse-power. Answer.

The power of an engine may be increased by increasing its speed. When it is not permissable to increase the speed of line shaft, the diameter of driven pulley on line shaft may be increased, or the diameter of pulley on main shaft may be decreased, so as to maintain former speed of main driving belt. Decreasing the diameter of main shaft pulley gives the engine greater leverage, and increasing the speed of engine gives greater power. It means that the engine will require so many more cylinder fulls of steam, at former pressure, in the same time, and this, of course, necessitates the burning of more fuel. In case the boiler is able to stand a higher pressure

of steam, the power of an engine may be increased by increasing the boiler pressure, and as a consequence the mean effective pressure on the piston. But this also would necessitate the consumption of more fuel, as we cannot get more power for nothing. Again, by increasing the boiler pressure, and decreasing the outside lap of valve so as to cut off later, the power of an engine may be increased. But this latter method is not advisable.

Locomotive Engines.

Lap = Travel × 0.22

Lead = " × 0.07

Let D equal diameter of cylinder.

Then,

Area of steam ports = $D^2 \times .08$

" " exhaust " = $D^2 \times .18$

Diam. of piston rod = $D \times .15$

Thickness " " = $D \times .28$

Diam. of feed pump plunger if of same stroke as piston = $D \times .11$

Diam. of feed pipe = $D \times .12$

Diam. of valve stem = $D \times .09$

Diam. of driving axle = $D \times .4$

Diam of truck " = $D \times .3$

Table of Standard Horse-Power for Different Nations.

COUNTRY.	KILOGRAM METERS PER SECOND.	BADEN FOOT POUNDS PER SECOND.	SAXON FOOT POUNDS PER SECOND.	WURTEMBERG FOOT POUNDS PER SECOND.	PRUSSIAN FOOT POUNDS PER SECOND.	HANOVARIAN FOOT POUNDS PER SECOND.	ENGLISH FOOT POUNDS PER SECOND.	AUSTRIAN FOOT POUNDS PER SECOND.
France and Baden	75	500	.....	.....	.....	.....	542.47	.....
Saxony	.....	.....	530	.....	.....	.....	542.80	.....
Wurtemberg	.....	.....	.....	525	.....	.....	543 95	.....
Prussia	.....	.....	.....	.....	480	.....	544.82	.....
Hanover	.....	.....	.....	.....	.....	516	545.08	.....
England	.....	.....	.....	.....	.....	.....	550	.....
Austria	.....	.....	.....	.....	.....	.....	550.57	430

LINEAR EXPANSION OF SUBSTANCES BY HEAT.

To find the increase in the length of a bar of any material due to an increase of temperature, multiply the number of degrees of increase of temperature by the coefficient for 100 degress and by the length of the bar, and divide by 100.

NAME OF SUBSTANCE.	COEFFICIENT FOR 100° FAHRENHEIT.	COEFFIC'NT FOR 180° FAHRENHEIT, OR 100° CENTIGRADE.
Baywood (in the direction of the grain, dry)	.00026 TO .00031	.00046 TO .00057
Brass (cast)	.00104	.00188
" (wire)	.00107	.00193
Brick (fire)	.0003	.0005
Cement (Roman)	.0008	.0014
Copper	.0009	.0017
Deal (in the direction of the grain, dry)	.00024	.00044
Glass (English flint)	.00045	.00081
" (French white lead)	.00048	.00087
Gold	.0008	.0015
Granite (average)	.00047	.00085
Iron (cast)	.0006	.0011
" (soft forged)	.0007	.0012
" (wire)	.0008	.0014
Lead	.0016	.0029
Marble (Carrara)	.00036 TO .0006	.00065 TO .0011
Mercury	.0033	.0060
Platinum	.0005	.0009
Sandstone	.0005 TO .0007	.0009 TO .0012
Silver	.0011	.002
Slate (Wales)	.0006	.001
Water (varies considerably with the temperature)	.0086	.0155

Electricity.

In the following list, each substance becomes positively electrified when rubbed with the body following it; but negatively, with the one preceding it.

Cat's fur.	Cotton.	Shellac.	Caoutchouc.
Flannel.	Silk.	Resin.	Gutta-percha.
Ivory.	The hand.	The metals.	Gun-cotton.
Glass.	Wood.	Sulphur.	

In the following list each substance is electro-negative toward those which follow it, and electro-positive toward those which precede.

Oxygen.	Carbon.	Copper.	Manganese.
Sulphur.	Antimony.	Bismuth.	Aluminum.
Nitrogen.	Silicon.	Tin.	Magnesium.
Chlorine.	Hydrogen.	Lead.	Calcium.

Iodine.	Gold.	Cobalt.	Barium.
Phosphorus.	Platinum.	Nickel.	Lithium.
Molybdenum.	Mercury.	Iron.	Sodium.
Tungsten.	Silver.	Zinc.	Potasium.

Best Conductors.

Metals.	Minerals.	Vegetables.	Cotton.
Charcoal.	Water.	Animals.	Dry wood.
Flame.	Iron.	Linen.	Ice.

Best Iusulators.

Shellac.	Sulphur.	Glass.	Air.
Amber.	Wax.	Silk.	Dry paper.
Caoutchouc			

Etching.

For steel, 50 parts of water, 40 parts sulphuric, 10 parts nitric acid.

For iron, 50 parts of water, 45 parts sulphuric, and 5 parts hydrochloric acids.

For brass, 50 parts of water, 40 parts nitric, 10 parts hydrochloric acids.

Heat bath to 180 degrees, and immerse article for 15 minutes after bath is hot.

Specifications and Capacity of Mine Ventilating Fans.

OUTSIDE DIAMETER. FEET.	WIDTH OF BLADES. INCHES.	DEPTH OF BLADES. INCHES.	REVOLUTIONS OF FAN SHAFT PER MINUTE.	CUBIC FEET OF UNRESISTED DISCHARGE PER MINUTE.	HORSE-POWER SUITABLE TO DRIVE AT SPEED GIVEN.
6	18	20	400	35,000	5
7	21	24	350	48,000	7
8	24	30	300	60,000	8
9	27	32	270	80,000	9
10	30	34	240	100,000	12
12	32	36	200	132,000	14
14	36	42	175	190,000	16
18	48	54	140	325,000	25
24	60	66	100	600,000	35

Etching Liquid for Steel.

Mix one ounce of sulphate of copper, one-fourth of an ounce of alum, and one-half teaspoonful of salt reduced to powder, with one gill of vinegar and twenty drops of nitric acid. This liquid may be used either for eating deeply into the metal or for imparting a beautiful frosted appearance to the surface, according to the time it is allowed to act.

CAST IRON STEAM PIPE FLANGES.

Table of Standard Dimensions.

NOMINAL INTERNAL DIAMETER OF PIPE.	EXTERNAL DIAMETER OF FLANGES.	THICKNESS OF METAL.	APPROXIMATE WEIGHT OF FLANGES.
INCHES.	INCHES.	INCHES.	POUNDS.
¾	3½	½	1½
1	4	½	1 15/16
1¼	4½	9/16	2½
1½	5½	9/16	3¾
2	6½	5/8	6¼
2½	7	11/16	8
3	8	¾	9¾
3½	8½	13/16	11
4	9	⅞	14
4½	9½	15/16	15
5	11	1	21½
6	12	1 1/16	24
7	13	1⅛	33¼
8	14	1 3/16	42½
9	15	1¼	44½
10	16	1 5/16	47¼
11	17	1 5/16	50
12	18	1⅜	55
13	19	1 7/16	65
14	20	1½	76
15	21	1⅝	88
16	22	1¾	103
17	23	1¾	120

Comparative Value of Different Kinds of Wood for Fuel.

KINDS OF WOOD.	WEIGHT OF 1 CORD IN POUNDS.	RELATIVE VALUE FOR FUEL.
Red Oak	3,254	1.00
Shell-bark Hickory	4,469	1.45
Chestnut White Oak	3,955	1.25
White Oak	3,821	1.17
" Ash	3,450	1.12
" Beech	3,236	.94
Black Walnut	3,044	.94
" Birch	3,115	.91
Yellow Oak	2,919	.87
Hard Maple	2,878	.87
White Elm	2,592	.84
Large Magnolia	2,704	.81
Soft Maple	2,668	.78
" Yellow Pine	2,463	.78
Sycamore	2,391	.75
Chestnut	2,333	.75
White Birch	2,369	.70
Jersey Pine	2,137	.70
Pitch "	1,904	.62
White "	1,868	.61

Comparative Value of Wood and Coal as Fuel.

1 Cord of Hickory is equivalent to 2,000 lbs. coal.
1 " " White Oak " " 1,715 lbs. "
1 " " Beech " " 1,450 lbs. "
1 " " Red Oak " " " "
1 " " Black Oak " " " "
1 " " Poplar " " 1,050 lbs. "
1 " " Chestnut " " " "
1 " " Elm " " " "
1 " " Pine " " 925 lbs. "

Table Showing the Weight of One Cord of Different Woods—Air Dried.

1 Cord of Hickory or Hard Maple weighs 4,500 pounds.
1 " " White Oak " 3,850 "
1 " " Beech " 3,250 "
1 " " Red Oak " " "
1 " " Black Oak " " "
1 " " Poplar " 2,350 "
1 " " Chestnut " " "
1 " " Elm " " "
1 " " Pine " 2,000 "

Table Showing Water and Coal Required for Steam Power.

HORSE-POWER.	WATER IN GALLONS PER HOUR.	COAL REQUIR'D IN POUNDS PER HOUR	WATER IN GALLS. PER DAY OF 10 HOURS.	COAL IN LBS. PER DAY OF 10 HOURS.
5	20	20	200	200
10	41	40	410	400
15	58	60	580	600
20	72	80	720	800
25	90	100	900	1,000
30	110	120	1,100	1,200
40	145	160	1,450	1,600
50	180	200	1,800	2,000
60	220	240	2,200	2,400
70	260	280	2,600	2,800
80	290	320	2,900	3,200
100	405	400	4,050	4,000
125	450	500	4,500	5,000
150	590	600	5,900	6,000
200	725	800	7,250	8,000
250	900	1,000	9,000	10,000

It is stated that, by the greatest refinement in engines yet accomplished, the cost of a horse power has not been brought below 1½ pounds of coal per hour, while the average engine uses 3½ pounds of coal per horse-power.

One gallon of petroleum is equivalent under a boiler to 12 pounds of coal; 190 standard gallons are equivalent to 1 ton of coal.

One pound of coal is equal, for steam-making purposes, to 2 pounds of dry peat, 2¼ to 2½ pounds of dry wood, 2½ to 3 pounds of dried tan-bark, 2½ to 3 pounds of sun-dried bagasse, 2¾ to 3 pounds of cotton stalks, 3¼ to 3¾ pounds of wheat or barley straw, 5 to 6 pounds of wet bagasse, and 6 to 8 pounds of wet tan-bark.

About 30,000 cubic feet of natural gas are equal to one ton of coal.

One pound of petroleum is equal to 1.8 pounds of coal.

In estimating for a consumption of 14 pounds of coal per square foot of grate per hour, about 8 pounds of water may be taken as the rate of evaporation per pound of coal, which can be done with a good natural draught.

Percentage of Saving of Fuel By Heating Feed Water (Steam at 60 Lbs.).

FINAL TEMPERATURE.	INITIAL TEMPERATURE OF WATER.												
	32°	40°	50°	60°	70°	80°	90°	100°	120°	140°	160°	180°	200°
60°	2.39	1.71	0.86	0.									
80°	4.09	3.43	2.59	1.74	0.88	0.							
100°	5.79	5.14	4.32	3.49	2.64	1.77	0.90	0.					
120°	7.50	6.85	6.05	5.23	4.40	3.55	2.68	1.80	0.				
140°	9.20	8.57	7.77	6.97	6.15	5.32	4.47	3.61	1.84	0.			
160°	10.90	10.28	9.50	8.72	7.91	7.09	6.26	5.42	3.67	1.87	0.		
180°	12.60	12.00	11.23	10.46	9.68	8.87	8.06	7.23	5.52	3.75	1.91	0.	
200°	14.30	13.71	13.00	12.20	11.43	10.65	9.85	9.03	7.36	5.62	3.82	1.96	0.
220°	16.00	15.42	14.70	14.00	13.19	12.33	11.64	10.84	9.20	7.50	5.73	3.93	1.98
240°	17.79	17.13	16.42	15.69	14.96	14.20	13.43	12.65	11.05	9.37	7.64	5.90	3.97
260°	19.40	18.85	18.15	17.44	16.71	15.97	15.22	14.45	11.88	11.24	9.56	7.86	5.96
280°	21.10	20.56	19.87	19.18	18.47	17.75	17.01	16.26	14.72	13.02	11.46	9.73	7.94
300°	22.88	22.27	21.61	20.92	20.23	19.52	18.81	18.07	16.49	14.99	13.37	11.70	9.93

One dollar per day saved in cost of fuel amounts, with interest, to the following:

YEARS.	4 PER CENT.	6 PER CENT.	8 PER CENT.	10 PER CENT.
1	$324.48	$330.72	$336.96	$343.20
5	1,757.50	1,864.20	1,976.80	2,095.26
10	3,895.76	4,359.14	4,881.40	5,469.73
15	6.497.24	7.697.82	9,149.18	10,904.30
20	9,662.39	12,165.72	15,419.94	19,656.78

Softening Cast-Iron.

Heat the cast-iron to a red heat and quench in water about the same heat, and use the same judgment as you would in quenching a piece of steel, then heat again to a red heat, and allow to cool slowly, the same as you would anneal steel. There may be a difficulty in large pieces, from their liability to crack in quenching, but this process will soften them. Careful heating, however, will go largely towards preventing cracking.

WROUGHT IRON FLUES.

Resistance to Collapsing Pressure.

DIAMETER.	LENGTH.	THICKNESS.	COLLAPSING PRESSURE PER SQUARE INCH.	DIAMETER.	LENGTH.	THICKNESS.	COLLAPSING PRESSURE PER SQUARE INCH.
Ins.	Feet.	Ins.	Lbs.	Ins.	Feet.	Ins.	Lbs.
6	10	.2	417	11½	12	.2	197
6½	10	.2	385	11½	12	¼	368
7	10	.2	357	11½	12	5/16	532
7	10	¼	580	12	15	.2	153
7½	10	.2	333	12	15	¼	239
7½	10	¼	542	12	15	5/16	415
8	10	.2	312	12½	15	¼	229
8	10	¼	508	12½	15	5/16	308
8½	10	.2	294	13	15	¼	220
8½	10	¼	478	13	15	5/16	384
9	10	.2	278	13½	15	¼	212
9	10	¼	451	13½	15	5/16	369
9½	10	.2	163	14	18	¼	176
9½	10	¼	427	14	18	5/16	305
10	12	.2	227	14½	18	¼	168
10	12	¼	354	14½	18	5/16	294
10	12	5/16	612	15	20	¼	157
10½	12	.2	216	15	20	5/16	276
10½	12	¼	337	15½	20	¼	152
10½	12	5/16	583	15½	20	5/16	267
11	12	.2	206	16	20	¼	148
11	12	¼	322	16	20	5/16	231
11	12	5/16	557				

Weight and Number of Fish Plates and Bolts Required Per Mile.

Lengths of Rails.	No. of Joints per mile.	Lbs. of Plates per mile.	Lbs. of Bolts per mile.	Total Weights per mile.
18 feet.	588	9,408	2,352	11,760
21 "	528	8.448	2,112	10,560
24 "	440	7.040	1,760	8,800
25 "	423	6,768	1,682	8.460
27 "	391	6,256	1,564	7.820
30 "	352	5,632	1,408	7,040

NOTE.—If double nuts are used, add 37½ per cent to the weight of the bolts.

Temperature of Fire.

APPEARANCE.	TEMP. FAHR.	APPEARANCE.	TEMP. FAHR.
Red, just visible.....	977°	Orange, deep.....	2010°
" dull.....	1290°	" clear.....	2190°
" cherry, dull...	1470°	White heat.....	2370°
" " full...	1650°	" bright.....	2550°
" " clear..	1830°	" dazzling.....	2730°

Freezing Points.

Acid Nitric	55° below zero.
" Sulfuric	1° " "
Ether	47° " "
Mercury	39° " "
Milk	30°
Olive Oil	36°
Linseed Oil	11° " "
Proof Spirits	7° " "
Spirits Turpentine	16°
Vinegar	28°
Water	32°

Water expands in freezing $\frac{1}{9}$ of its bulk.

Morin's Laws of Friction.

1st.—The friction bears to the pressure on the surfaces in contact a ratio which is constant for the same materials, and with the same condition of surfaces.

2nd.—The measure of the friction is independent of the extent of the surfaces in contact, the pressure and the condition and character of the surfaces remaining the same.

3rd.—The friction is entirely independent of the velocity of continuous motion.

CENTRIFUGAL FORCE.

To Find the Centrifugal Force of a Given Weight.

RULE.—Multiply the square of the revolutions per minute, by the radius of the circle, in feet, in which the weight revolves, and this product by the weight itself. This product multiplied by the constant, .000331, will give the centrifugal force in terms of the weight of the body.

EXAMPLE.—A weight of 40 pounds revolving 75 times per minute is suspended 3 feet from center of shaft. What is its centrifugal force?

$$75^2 \times 3 \times 40 \times .000331 = 223.425 \text{ lbs. Ans.}$$

In Billing Railroad Freights the Following Weights Are Taken, When the Freight is Not Actually Weighed.

Ale and Beer	320	lbs.	per bbl.
Apples, green	150	"	" "
Beef	320	"	" "
Barley	48	"	" bu.
Beans	60	"	" "
Cider	350	"	" bbl.
Corn Meal	220	"	" "
Corn, shelled	56	"	" bu.
Corn in the ear	70	"	" "
Clover	60	"	" "
Eggs	200	"	" bbl.
Fish	300	"	" "
Flour	200	"	" "
Highwines	350	"	" "
Lime	200	"	" "
Nails	108	"	" keg.
Oil	400	"	" bbl.
Oats	32	"	" bu.
Pork	320	"	" bbl.
Potatoes, Irish	150	"	" "
Salt, fine	300	"	" "
" coarse	350	"	" "
" in sacks	200	"	" sack.
Wheat	60	"	" bu.
Whisky	350	"	" bbl.

Mending Broken Belts.

According to Campe, broken belting can be re-united by the use of chrome glue. With a lap of four or five inches, the re-united part is apparently as firm as any part of the band, though it is well to take the precaution to tack down the ends of the lapped pieces with a few stitches of stout thread. The chrome glue is prepared in this way: Take a 100 parts of glue soaked 12 hours in water, then pour off the surplus water, melt the glue, add 2 per cent. of glycerine and 3 per cent of red chromate of potash, melting them with the glue. This mixture, thinned by warming, is applied to the lapped ends after having been roughened with a rasp, and then placed between two hard wood strips in a vise and well pressed for 24 hours.

Wire Gauges, Nos. and Sizes.

NUMBER.	BIRMINGHAM OR STUB'S GAUGE.	BROWN & SHARPE'S GAUGE.	WASHBURN & MOEN'S GAUGE.	TRENTON IRON CO'S GAUGE.
7–0			.490	
6–0			.460	
5–0			.430	.450
4–0	.454	.46000	.393	.400
3–0	.425	.40964	.362	.360
2–0	.380	36480	.331	.330
1–0	.340	.32495	.307	.305
1	.300	.28930	.283	.285
2	.284	.25763	.263	.265
3	.259	.22942	.244	.245
4	.238	.20431	.225	.225
5	220	.18194	.207	.205
6	.203	.16202	.192	.190
7	.180	.14428	.177	.175
8	.165	.12849	.162	.160
9	.148	.11443	148	.145
10	134	.10189	.135	.130
11	.120	.09074	.120	.1175
12	.109	.08081	.105	1050
13	.095	.07196	.092	.0925
14	.083	.06408	.080	.0800
15	.072	.05707	.072	.0700
16	.065	.05082	.063	.0610
17	.058	.04526	.054	.0525
18	.049	.04030	.047	.0450
19	.042	.03589	.041	.0400
20	.035	.03196	.035	.0355
21	.032	.02846	.032	.0310
22	.028	.02535	.028	.0280
23	.025	.02257	.025	.0250
24	.022	.02010	.023	.0225
25	.020	.01790	.020	.02075
26	.018	.01594	.018	.01900
27	.016	.01419	.017	.01750
28	.014	.01264	.016	.01650
29	.013	.01126	.015	.01550
30	.012	.01002	.014	.01450
31	.010	.00893	.0135	.01375
32	.009	.00795	.013	.01300
33	.008	.00708	.011	.01200
34	.007	.00630	.010	.01100
35	.005	.00561	.0095	.01000
36	.004	.00500	.009	.00900
37		.00445		.00825
38		.00396		.00775
39		.00353		.00725
40		.00314		.00675

When plumbago is put on a hot journal the fine powder fills up the cavities and grooves caused by the heating and abrasion of the surfaces thus forming as it were a new surface.

Plumbago being of a fine metallic nature puts a polished surface upon a journal which with a little attention will cool down and cause no more trouble.

Sizes of the Numbers of Steel Music Wire Gauge.

No. of Gauge.	Size of each No. in decimal parts of an inch.	No. of Gauge.	Size of each No. in decimal parts of an inch.
12	.0295	21	.0461
13	.0311	22	.0481
14	.0325	23	.0506
15	.0343	24	.0547
16	.0359	25	.0585
17	.0378	26	.0626
18	.0395	27	.0663
19	.0414	28	.0719
20	.043	....	.....

STANDARD SAW GAUGE.

To be Observed When Ordering Circular Saws.

Gauge No. 4 is ¼ inch scant.
" " 5 is $\frac{7}{32}$ "
" " 6 is $\frac{3}{16}$ " full.
" " 7 is $\frac{3}{16}$ " scant.
" " 8 is $\frac{5}{32}$ "
" " 9 is $\frac{5}{32}$ " scant.
" " 10 is ⅛ " full.
" " 11 is ⅛ " scant.
" " 12 is $\frac{3}{32}$ " full.
" " 16 is $\frac{1}{16}$ " full.

JOBBERS' DRILL GAUGE.

Sizes of Gauge in Decimals.

SIZE.	DEC.	SIZE.	DEC.
$\frac{1}{16}$	.0625	$\frac{19}{64}$	.29687
$\frac{5}{64}$	.07812	$\frac{5}{16}$	.3125
$\frac{3}{32}$	.09375	$\frac{21}{64}$	.32812
$\frac{7}{64}$	.10937	$\frac{11}{32}$	.34375
⅛	.125	$\frac{23}{64}$	.35937
$\frac{9}{64}$	.14062	⅜	.375
$\frac{5}{32}$	.15625	$\frac{25}{64}$	.39062
$\frac{11}{64}$	.17187	$\frac{13}{32}$	.40625
$\frac{3}{16}$	.1875	$\frac{27}{64}$	.42187
$\frac{13}{64}$	.20312	$\frac{7}{16}$	.4375
$\frac{7}{32}$	.21875	$\frac{29}{64}$	.45312
$\frac{15}{64}$	.23437	$\frac{15}{32}$	.46875
¼	.25	$\frac{31}{64}$	.48437
$\frac{17}{64}$	.26562	½	.50
$\frac{9}{32}$	.28125		

Twist Drill and Steel Drill Rod Gauge.

NOS.	SIZES IN DECIMALS OF INCH.	NEAREST SIZE IN FRACTIONS OF INCH.	NOS.	SIZES IN DECIMALS OF INCH.	NEAREST SIZE IN FRACTIONS OF INCH.	NOS.	SIZES IN DECIMALS OF INCH.	NEAREST SIZE IN FRACTIONS OF INCH.	NOS.	SIZES IN DECIMALS OF INCH.	NEAREST SIZE IN FRACTIONS OF INCH.
1	0.228		16	0.177		31	0.120		46	0.080	
2	0.221	$\frac{7}{32}$	17	0.173		32	0.116		47	0.079	$\frac{5}{64}$
3	0.213		18	0.170	$\frac{11}{64}$	33	0.113		48	0.076	
4	0.209		19	0.166		34	0.111		49	0.073	
5	0.206		20	0.161		35	0.110	$\frac{7}{64}$	50	0.070	
6	0.204	$\frac{13}{64}$	21	0.159		36	0.106		51	0.067	
7	0.201		22	0.156	$\frac{5}{32}$	37	0.104		52	0.064	
8	0.199		23	0.154		38	0.101		53	0.060	$\frac{1}{16}$
9	0.196		24	0.152		39	0.100		54	0.054	
10	0.194		25	0.150		40	0.098		55	0.052	
11	0.191		26	0.148		41	0.096		56	0.047	$\frac{3}{64}$
12	0.188	$\frac{3}{16}$	27	0.145		42	0.094	$\frac{3}{32}$	57	0.044	
13	0.185		28	0.141	$\frac{9}{64}$	43	0.089		58	0.042	
14	0.182		29	0.136		44	0.086		59	0.041	
15	0.180		30	0.129	$\frac{1}{8}$	45	0.082		60	0.040	

Yearly Table of Gas Burning Hours.

Showing the number of hours from sunset to ten o'clock at night, for each month in the year, with the average for each month, and the comparative length of the evenings.

Month.	Total per Month.	Average per Night.	Comparative Length of Evenings.
June	76 hrs. 55 min.	2 hrs. 34 min.	100
July	83 " 52 "	2 " 42 "	100
May	88 " 38 "	2 " 51 "	115
August	99 " 16 "	3 " 12 "	132
April	102 " 47 "	3 " 25 "	134
September	115 " 24 "	3 " 51 "	150
March	127 " 06 "	4 " 06 "	165
February	132 " 59 "	4 " 55 "	172
October	140 " 41 "	4 " 31 "	182
November	153 " 35 "	5 " 07 "	199
January	163 " 16 "	5 " 16 "	212
December	168 " 25 "	5 " 26 "	218

WINDOW GLASS.

Window glass is sold by the box, which contains, as nearly as possible, 50 square feet, whatever may be the size of panes.

The thickness of ordinary or "single thick" window glass is about 1-16 of an inch, and of "double thick" nearly ⅛ of an inch.

The tensile strength of common glass varies from 2,000 lbs. to 3,000 lbs per square inch, and its crushing strength from 6,000 lbs. to 10,000 lbs.

SIZES. IN.	LIGHTS PER BOX. NO.	SIZES. IN.	LIGHTS PER BOX. NO.	SIZES. IN.	LIGHTS PER BOX. NO.	SIZES. IN.	LIGHTS PER BOX. NO.	SIZES. IN.	LIGHTS PER BOX. NO.
6 × 8	150	11 × 24	27	14 × 18	29	18 × 18	22	24 × 30	10
7 × 9	115	26	25	20	26	20	20	32	10
8 × 10	90	28	23	22	24	22	18	34	9
12	75	30	22	24	22	24	17	36	9
13	69	32	20	26	20	26	16	38	8
14	64	34	19	28	19	28	14	40	8
15	60	36	18	30	17	30	14	42	7
16	56	38	17	32	16	32	13	44	7
18	50	40	16	34	15	34	12	46	7
20	45	42	15	36	14	36	11	48	6
9 × 11	73	12 × 12	50	38	14	38	11	26 × 26	11
12	67	13	46	40	13	40	10	28	10
13	62	14	43	42	12	42	10	30	9
14	57	15	40	44	12	44	9	32	9
15	53	16	38	46	11	46	9	34	8
16	50	18	34	15 × 15	32	20 × 20	18	36	8
18	44	19	32	16	30	22	17	38	7
20	40	20	30	18	27	24	15	40	7
22	36	22	27	20	24	26	14	42	7
10 × 12	60	24	25	22	22	28	13	44	6
13	55	26	23	24	20	30	12	46	6
14	52	28	22	26	19	32	11	48	6
15	48	30	20	28	17	34	11	23 × 28	9
16	45	32	19	30	16	36	10	30	9
18	40	34	18	32	15	38	10	32	8
19	38	36	17	34	14	40	9	34	8
20	36	38	16	26	13	42	9	36	7
22	33	40	15	38	13	44	8	38	7
24	30	42	14	40	12	46	8	40	7
26	28	13 × 15	37	42	11	22 × 22	15	42	6
28	25	16	35	44	11	24	14	44	6
30	24	18	31	16 × 16	28	26	13	46	6
32	22	20	28	18	25	28	12	48	5
34	21	22	25	20	23	30	11	30 × 30	8
36	20	24	23	22	21	32	10	32	7
38	19	26	21	24	19	34	10	34	7
40	18	28	20	26	17	36	9	36	7
42	17	30	18	28	16	38	9	38	7
11 × 12	55	32	17	30	15	40	8	40	6
14	47	34	16	32	14	42	8	42	6
15	44	36	15	34	13	44	7	44	6
16	41	38	15	36	13	46	7	46	5
18	37	40	14	38	12	48	7	48	5
19	34	42	13	40	11	24 × 24	12	50	5
20	33	14 × 14	37	42	11	26	12		
22	30	16	32	44	10	28	11		

In buying anthracite coal, that quality should be selected which has a conchoidal fracture and a bright appearance. If it is of a dull appearance and shows seams and cracks, it will fly into fragments in the furnace, and will not prove economical. With soft coal if the fracture presents a whitish film or rusty stains, they are indications of sulphur and pyrites, and such coal should be rejected for furnace use.

Number of Panes Per 50 Feet, or in One Box.

SIZE.	PANES.	SIZE.	PANES.	SIZE.	PANES.	SIZE.	PANES.
6 by 8	150	12 by 14	43	14 by 24	22	20 by 24	15
7 " 9	114	12 " 15	41	15 " 15	32	20 " 25	14
8 " 10	90	12 " 16	38	15 " 16	30	20 " 26	14
8 " 11	82	12 " 17	35	15 " 18	27	20 " 28	13
8 " 12	75	12 " 18	33	15 " 20	24	21 " 27	13
9 " 10	80	12 " 19	32	15 " 21	23	22 " 24	14
9 " 11	73	12 " 20	32	15 " 22	22	22 " 26	13
9 " 12	67	12 " 21	29	15 " 24	20	22 " 28	12
9 " 13	61	12 " 22	28	16 " 16	23	24 " 28	11
9 " 14	57	12 " 23	26	16 " 17	26	24 " 30	10
9 " 15	53	12 " 24	25	16 " 18	25	24 " 32	9
9 " 16	50	13 " 14	39	16 " 20	23	25 " 30	10
10 " 10	72	13 " 15	37	16 " 21	21	26 " 36	8
10 " 12	60	13 " 16	35	16 " 22	20	28 " 34	8
10 " 13	55	13 " 17	33	16 " 24	19	30 " 40	6
10 " 14	51	13 " 18	31	17 " 17	25	31 " 36	6
10 " 15	48	13 " 19	29	17 " 18	24	31 " 40	6
10 " 16	45	13 " 20	27	17 " 20	21	31 " 42	6
10 " 17	42	13 " 21	26	17 " 22	19	32 " 42	5
10 " 18	40	13 " 22	25	17 " 24	18	32 " 44	5
11 " 11	59	13 " 24	23	18 " 18	22	33 " 45	5
11 " 12	55	14 " 14	37	18 " 20	20	34 " 46	5
11 " 13	50	14 " 15	34	18 " 22	18	30 " 52	4
11 " 14	47	14 " 16	32	18 " 24	17	32 " 56	4
11 " 15	44	14 " 17	30	19 " 19	20	36 " 58	3
11 " 16	41	14 " 18	29	19 " 20	19	38 " 58	3
11 " 17	39	14 " 19	27	19 " 22	17	40 " 60	3
11 " 18	36	14 " 20	26	19 " 24	16		
12 " 12	50	14 " 21	24	20 " 20	18		
12 " 13	46	14 " 22	23	20 " 22	16		

SIZE OF WINDOWS.

12 LIGHTS.	4 LIGHTS.	HEIGHT.	WIDTH.
7 x 9 or $10\frac{1}{2}$	x 18	3 ft 5 in.	2 ft. $0\frac{5}{8}$ in.
8 x 10 " 12	x 20	3 " 9 "	2 " $3\frac{3}{4}$ "
8 x 12 " 12	x 24	4 " 5 "	2 " $3\frac{3}{8}$ "
9 x 12 " $13\frac{1}{2}$	x 24	4 " 5 "	2 " $6\frac{3}{8}$ "
9 x 13 " $13\frac{1}{2}$	x 20	4 " 9 "	2 " $6\frac{5}{8}$ "
9 x 14 " $13\frac{1}{2}$	x 28	5 " 1 "	2 " $6\frac{5}{8}$ "
9 x 15 " $13\frac{1}{2}$	x 30	5 " 5 "	2 " $6\frac{5}{8}$ "
10 x 15 " 15	x 30	5 " 5 "	2 " $9\frac{5}{8}$ "
10 x 16 " 15	x 32	5 " 9 "	2 " $9\frac{5}{8}$ "
10 x 17 " 15	x 34	6 " 1 "	2 " $9\frac{5}{8}$ "
10 x 18 " 15	x 76	6 " 5 "	2 " $9\frac{5}{8}$ "
12 x 18 " 18	x 33	6 " 5 "	3 " $3\frac{5}{8}$ "
12 x 20 " 18	x 10	7 " 1 "	3 " $3\frac{5}{8}$ "
11 x 16	12 lights.	5 " 9 "	3 " $0\frac{5}{8}$ "
11 x 17	12 "	6 " 1 "	3 " $0\frac{5}{8}$ "
11 x 18	12 "	6 " 5 "	3 " $0\frac{5}{8}$ "
14 x 26	4 "	4 " 9 "	3 " $7\frac{5}{8}$ "
14 x 28	4 "	5 " 1 "	2 " $7\frac{5}{8}$ "
14 x 30	4 "	5 " 5 "	2 " $7\frac{5}{8}$ "
14 x 32	4 "	5 " 9 "	2 " $7\frac{5}{8}$ "
16 x 32	4 "	5 " 9 "	2 " $11\frac{5}{8}$ "
16 x 34	4 "	6 " 1 "	2 " $11\frac{5}{8}$ "
16 x 36	4 "	6 " 5 "	2 " $11\frac{5}{8}$ "
8 x 10	24 "	5 " $5\frac{1}{2}$ "	2 " $11\frac{7}{8}$ "
8 x 12	24 "	6 " $5\frac{1}{2}$ "	2 " $11\frac{7}{8}$ "
9 x 12	24 "	6 " $5\frac{1}{2}$ "	3 " $3\frac{7}{8}$ "
9 x 13	24 "	6 " $11\frac{1}{2}$ "	3 " $3\frac{7}{8}$ "

SIZE OF CELLAR, 1 LIGHT, AND 4 LIGHT SASH.

	HEIGHT.	WIDTH.
6x 8 3 lights.	0 ft. $11\frac{1}{4}$ in.	1 ft. $9\frac{5}{8}$ in.
6x 8 4 "	0 " $11\frac{1}{4}$ "	2 " $3\frac{7}{8}$ "
7x 9 3 "	1 " $0\frac{1}{4}$ "	2 " $0\frac{5}{8}$ "
7x 9 4 "	1 " $0\frac{1}{4}$ "	2 " $7\frac{7}{8}$ "
8x10 3 "	1 " $1\frac{1}{4}$ "	2 " $3\frac{5}{8}$ "
8x12 3 "	1 " $3\frac{1}{4}$ "	2 " $3\frac{5}{8}$ "
8x12 4 "	1 " $3\frac{1}{4}$ "	2 " $11\frac{7}{8}$ "
9x12 3 "	1 " $3\frac{1}{4}$ "	2 " $6\frac{3}{8}$ "
9x12 4 "	1 " $3\frac{1}{4}$ "	3 " $3\frac{7}{8}$ "
9x13 3 "	1 " $4\frac{1}{4}$ "	2 " $6\frac{3}{8}$ "
9x13 4 "	1 " $4\frac{1}{4}$ "	3 " $3\frac{7}{8}$ "
9x15 3 "	1 " $6\frac{1}{4}$ "	2 " $6\frac{3}{8}$ "
10x12 3 "	1 " $3\frac{1}{4}$ "	2 " $9\frac{5}{8}$ "
10x14 3 "	1 " $5\frac{1}{4}$ "	2 " $9\frac{7}{8}$ "
10x15 3 "	1 " $6\frac{1}{4}$ "	2 " $9\frac{5}{8}$ "
10x16 3 "	1 " $7\frac{1}{4}$ "	2 " $9\frac{5}{8}$ "
10x18 3 "	1 " $9\frac{1}{4}$ "	2 " $9\frac{5}{8}$ "
9x13 1 "	1 " $4\frac{1}{4}$ "	1 " $0\frac{1}{4}$ "
10x14 1 "	1 " $5\frac{1}{4}$ "	1 " $1\frac{1}{4}$ "
10x15 1 "	1 " $6\frac{1}{4}$ "	1 " $1\frac{1}{4}$ "
7x 9 4 "	1 " $9\frac{1}{2}$ "	1 " $5\frac{1}{2}$ "
8x10 4 "	1 " $11\frac{1}{2}$ "	1 " $7\frac{1}{2}$ "
9x12 4 "	2 " $3\frac{1}{2}$ "	1 " $9\frac{1}{2}$ "
9x13 4 "	2 " $5\frac{1}{2}$ "	1 " $9\frac{1}{2}$ "

SKY LIGHT SASH.

2 ft. 0 in.x2 ft. 6 in.	2 ft. 2 in.x3 ft. 0 in.
1 ft. 10 in.x3 ft. 0 in.	2 ft. 0 in.x3 ft. 6 in.
2 ft. 6 in.x3 ft. 0 in.	2 ft. 2 in.x3 ft. 6 in.

The semi-bituminous coals occupy rather the smallest space per ton weight (42.0372 cu. ft.), the anthracite ranking next (42.13 cu. ft.), the bituminous coals of Pennsylvania ranking third (42.671 cu. ft.), and next the coking coals of Virginia, being the only free burning coals which are decidedly lighter (45.8804 cu. ft.) indicating that anthracite is the heaviest class of coal.

GRINDSTONES.

Weights of Grindstones.

RULE.—Square the diameter (in inches), multiply by thickness (in inches), then multiply by decimal .06363.

EXAMPLE.—Find the weight of a stone 4 feet 6 inches in diameter and 7 inches thick. 4 feet 6 inches = 54; square of 54 = 2916; multiplied by 7 = 20412; multiplied by .06363 = answer 1298.815 pounds weight of stone.

Grindstone Speeds.

For Ohio grindstones, from 2,000 to 3,000 feet per minute.

For Lake Huron stones, from 2,800 to 4,000 feet per minute.

To find the rate of speed for a grindstone.

RULE.—Multiply the diameter in inches by 3.1416 and divide by 12, then multiply by the number of revolutions, the product will give the number of feet per minute at which the stone is traveling.

Standard Table of Weights of Ohio Grindstones.

THICKNESS	DIAMETER IN FEET AND INCHES.												
	7—0	7—1	7—2	7—3	7—4	7—5	7—6	7—7	7—8	7—9	7—10	7—11	8—0
5 inch.	2244	2298	2353	2408	2463	2520	2577	2634	2692	2751	2811	2871	2932
5½ "	2469	2528	2588	2648	2710	2772	2834	2898	2962	3026	3092	3158	3223
6 "	2693	2758	2823	2889	2956	3024	3092	3161	3231	3301	3373	3445	3518
6½ "	2918	2988	3058	3130	3202	3276	3350	3424	3500	3577	3654	3732	3811
7 "	3142	3218	3294	3371	3449	3528	3607	3688	3769	3852	3935	4019	4104
7½ "	3367	3447	3529	3612	3695	3780	3865	3951	4039	4127	4216	4306	4398
8 "	3591	3677	3764	3852	3941	4032	4123	4215	4308	4402	4497	4594	4691
8½ "	3816	3907	4000	4093	4188	4284	4380	4478	4577	4677	4778	4881	4984
9 "	4040	4137	4235	4334	4434	4536	4638	4742	4847	4952	5060	5168	5277
9½ "	4265	4367	4470	4575	4680	4788	4896	5005	5116	5228	5341	5455	5570
10 "	4489	4597	4706	4816	4927	5040	5154	5269	5385	5503	5622	5742	5864
10½ "	4714	4827	4944	5056	5173	5292	5411	5532	4654	5778	5903	6029	6157
11 "	4938	5056	5176	5297	5420	5544	5669	5796	5924	6053	6184	6316	6450
11½ "	5163	5286	5411	5538	5666	5796	5927	6059	6193	6328	6465	6603	6743
12 "	5387	5516	5647	5779	5912	6048	6184	6322	6462	6603	6746	6891	7036
12½ "	5611	5746	5882	6020	6159	6300	6442	6586	6732	6879	7027	7178	7330
13 "	5836	5976	6117	6260	6415	6552	6690	6849	7001	7154	7308	7465	7623
13½ "	6060	6206	6353	6501	6651	6804	6957	7113	7270	7429	7589	7752	7916
14 "	6285	6436	6588	6742	6898	7056	7215	7376	7539	7704	7871	8039	8209
14½ "	6509	6665	6823	6983	7144	7308	7473	7640	7809	7979	8152	8326	8502
15 "	6734	6895	7059	7224	7391	7560	7731	7903	8078	8254	8433	8613	8796
15½ "	6958	7125	7294	7464	7637	7812	7988	8169	8347	8529	8714	8901	9089
16 "	7183	7355	7529	7705	7883	8064	8246	8430	8616	8805	8995	9188	9382

All stones over 200 pounds are sold by measurement weight; less than 200 pounds, by actual weight on scales.

The pressure per square inch (14.7 lbs. at the level of the sea), was discovered by Torricelli in 1645.

GEARING.

Table of Diametral and Circular Pitch of Gears.

NO. OF TEETH PER IN. OF DIA.	CIRCULAR PITCH.	NO. OF TEETH PER IN. OF DIA.	CIRCULAR PITCH.	NO. OF TEETH PER IN. OF DIA.	CIRCULAR PITCH.	NO. OF TEETH PER IN. OF DIA.	CIRCULAR PITCH.
1	3.1415	21	.1496	48	.0654	75	.0418
1.25	2.5132	22	.1428	49	.0641	76	.0413
1.5	2.0941	23	.1322	50	.0628	77	.0408
1.75	1.7951	24	.1309	51	.0616	78	.0402
2	1.5708	25	.1256	52	.0604	79	.0397
2.25	1.3961	26	.1208	53	.0592	80	.0392
2.5	1.2566	27	.1163	54	.0581	81	.0387
2.75	1.1422	28	.1122	55	.0571	82	.0383
3	1.047	29	.1083	56	.0561	83	.0378
3.5	.89755	30	.1048	57	.0551	84	.0374
4	.785	31	.1013	58	.0541	85	.0369
5	.628	32	.0981	59	.0532	86	.0365
6	.523	33	.0952	60	.0523	87	.0361
7	.448	34	.0924	61	.0514	88	.0357
8	.392	35	.0897	62	.0506	89	.0352
9	.349	36	.0872	63	.0498	90	.0349
10	.314	37	.0849	64	.04908	91	.0345
11	.285	38	.0826	65	.0483	92	.0341
12	.261	39	.0805	66	.0476	93	.0337
13	.242	40	.0785	67	.0468	94	.0334
14	.224	41	.0766	68	.0462	95	.0330
15	.209	42	.0748	69	.0455	96	.0327
16	.196	43	.0730	70	.0448	97	.0323
17	.184	44	.0714	71	.0442	98	.0320
18	.174	45	.0698	72	.0436	99	.0317
19	.165	46	.0683	73	.0430	100	.0314
20	.157	47	.0668	74	.0424		

Teeth of Wheels—Cast Iron.

Table Showing the Horse-Power that may be Transmitted by each Inch of Breadth of Tooth, with Different Velocities and Pitches.

VELOCITY IN FEET PER SECOND.	PITCH OF TEETH IN INCHES.										
	¾	1	1¼	1½	1¾	2	2½	3	4	5	6
	h.p.	h.p.	h.p.	h.p.	h.p.	h.p.	h.p.	h.p.	h.p.	h p.	h.p.
¼	.008	.015	.023	.033	.045	.06	.093	.135	.24	.37	.54
½	.017	.03	.047	.67	.09	.12	.18	.27	.43	.75	.108
¾	.025	.045	.07	.101	.138	.18	.281	.4	.72	1.12	1.62
1	.033	.06	.094	.135	.184	.24	.375	.54	96	1.5	2.16
2	.067	.12	.188	.27	.366	.48	.75	1.08	1.9	3.0	4.3
3	.10	.18	.28	.40	.55	.72	1.1	1.6	2.8	4.5	6.4
4	.13	.24	.37	.54	.73	.96	1.5	2.1	3.8	6.	8.6
5	.17	.30	.47	.67	.91	1.2	1.8	2.7	4.8	7.5	10.8
6	.20	.36	.56	.81	1.1	1.4	2.2	3.2	5.7	9.	12.9
7	.23	.42	.65	.94	1.28	1.68	2.6	3.7	6.7	10.5	15.1
8	.27	.48	.75	1.1	1.4	1.9	3.	4.3	7.6	12.	17.2
9	.30	.54	.84	1.2	1.6	2.1	3.3	4.8	8.6	13.5	19.4
10	.33	.6	.94	1.35	1.8	2.4	3.7	5.4	9.6	15.	21.6
12	.40	.72	1.1	1.6	2.1	2.8	4.5	6.4	11.5	18.	25.9
14	.47	.84	1.3	1.8	2.5	3.3	5.2	7.5	13.4	21.	30.2
16	.54	.96	1.5	2.1	2.9	3 8	6.	8.6	15.3	24.	34.5
18	.61	1.1	1.7	2.4	3.3	4.3	6.7	9.7	17.3	27.	38.9
20	.66	1.2	1.9	2.7	3.6	4.8	7.5	10.8	19.2	30.	43.2
22	.74	1.3	2.1	2.9	4.	5.3	8.2	11.9	21.1	33.	47.5
24	.81	1.4	2.2	3.2	4.4	5.7	9.	12.9	23.	36.	51.8
26	.88	1.5	2.4	3.5	4.7	6.2	9.7	14.	24 9	39.	56.1
28	.95	1.6	2.6	3.7	5.1	6.7	10.5	15.1	26.9	42.	60.4
30	1.01	1.8	2.8	4.	5.5	7.2	11.2	16.2	28.8	45.	64.8
35	1.2	2.1	3.3	4.7	6.4	8.4	13.1	18.9	33.6	52.5	75.6
40	1.3	2.3	3.7	5.4	7.3	9.6	15.	21.6	38.4	60.	86.4

The diametral pitch of a gear is the number of teeth to each inch of its pitch diameter.

The circular pitch is the distance from the center of one tooth to the center of the tooth, measured along the pitch circle.

Table of Pitch Diameters.

FOR ONE INCH CIRCULAR PITCH.

TEETH.	PITCH. DIAM.	TEETH.	PITCH. DIAM.	TEETH.	PITCH. DIAM.	TEETH.	PITCH. DIAM.
10	3.18	38	12.10	66	21.02	94	29.93
11	3.50	39	12.42	67	21.33	95	30.25
12	3.82	40	12.74	68	21.65	96	30.56
13	4.14	41	13.05	69	21.97	97	30.88
14	4.46	42	13.37	70	22.29	98	31.20
15	4.78	43	13.66	71	22.60	99	31.52
16	5.09	44	14.00	72	22.92	100	31.84
17	5.40	45	14.33	73	23.24		
18	5.73	46	14.65	74	23.56		
19	6.05	47	14.96	75	23.88		
20	6.37	48	15 28	76	24.20		
21	6 69	49	15.60	77	24.52		
22	7.00	50	15.92	78	24.83		
23	7.32	51	16.24	79	25.15		
24	7.64	52	16.56	80	25.47		
25	7.96	53	16.87	81	25.79		
26	8.28	54	17.19	82	26.10		
27	8.60	55	17.52	83	26.43		
28	8.90	56	17.83	84	26.74		
29	9.23	57	18.15	85	27.06		
30	9.55	58	18.47	86	27.38		
31	9.87	59	18.78	87	27.70		
32	10.19	60	19.10	88	28.02		
33	10.50	61	19.42	89	28.34		
34	10.82	62	19.74	90	28.65		
35	11.14	63	20.06	91	28.97		
36	11.46	64	20.38	92	29.29		
37	11.78	65	20.69	93	29.60		

For any other pitch than one inch circular pitch, multiply the tabular pitch by the required pitch.

The pitch diameter of a gear of half inch pitch and 52 teeth is one-half the tabular number 16.56 or 8.28.

A sharp point of hardened steel will cut glass nearly as well as a diamond. Take an old worn-out three-cornered file, grind the end to a three-cornered point, heat it red hot, and immediately plunge it into a mixture of snow and salt. Retouch it on the stone to remove the scale, and it is ready for use. If rightly done it will give very good satisfaction. In using it hold the file nearly perpendicular, slightly inclined forward, and with a gentle pressure draw it rapidly over the glass without changing its inclination to the surface. In cutting thick glass it is safer to cut on both sides before attempting to separate the pieces, but thin glass may be cut with the greatest facility.

When the point becomes dull from use it will produce only a ragged surface—scratch—but will not cut. It then needs regrinding.

Table Showing the Diameter of a Wheel for a Given Pitch, or the Pitch for a Given Diameter.

NO. OF TEETH.	ANGLE.			CHORD DIAM.	ARC DIAM.	NO. OF TEETH.	ANGLE.			CHORD DIAM.	ARC DIAM.
	°	′	″				°	′			
3	60			1.1547	0.9549	68	2	38	49	21.6537	21.6450
4	45			1.4142	1.2731	69	2	36	31	21.9717	21.9633
5	36			1.7013	1.5915	70	2	34	17	22.2895	22.2816
6	30			2.0000	1.9098	71	2	32	7	22.6068	22.5999
7	25	42	51	2.3046	2.2249	72	2	30		22.9256	22.9182
8	22	30		2.6131	2.5464	73	2	27	57	23.2430	23.2365
9	20			2.9238	2.8647	74	2	25	57	23.5613	23.5548
10	18			3.2361	3.1830	75	2	24		23.8802	23.8731
11	16	21	5	3.5495	3.5014	76	2	22	6	24.1993	24.1914
12	15			3.8637	3.8197	77	2	20	16	24.5155	24.5098
13	13	50	46	4.1786	4.1380	78	2	18	28	24.8340	24.8281
14	12	51	26	4.4939	4.4563	79	2	16	43	25.1517	25.1464
15	12			4.8097	4.7746	80	2	15		25.4713	25.4647
16	11	15		5.1258	5.0929	81	2	13	20	25.7896	25.7830
17	10	35	18	5.4421	5.4112	82	2	11	42	26.1092	26.1013
18	10			5.7585	5.7295	83	2	10	72	26.4268	26.4196
19	9	28	26	6.0756	6.0478	84	2	8	34	26.7452	26.7319
20	9			6.3924	6.3661	85	2	7	4	27.0608	27.0562
21	8	34	17	6.7095	6.6844	86	2	5	35	27.3803	27.3745
22	8	10	55	7.0266	7.0028	87	2	4	8	27.7000	27.6928
23	7	49	34	7.3439	7.3211	88	2	2	44	28.0158	28.0112
24	7	30		7.6613	7.6394	89	2	1	21	28.3351	28.3295
25	7	12		7.9787	7.9577	90	2			28.6587	28.6478
26	6	55	23	8.2963	8.2760	91	1	58	41	28.9715	28.9661
27	6	40		8.6138	8.5943	92	1	57	23	29.2921	29.2844
28	6	25	43	8.9314	8.9126	93	1	56	8	29.6074	29.6027
29	6	12	25	9.2490	9.2309	94	1	54	54	29.9250	29.9210
30	6			9.5668	9.5492	95	1	53	41	30.2452	30.2393
31	5	48	23	9.8846	9.8675	96	1	52	30	30.5632	30.5576
32	5	37	30	10.2023	10.1858	97	1	51	20	30.8833	30.8755
33	5	27	16	10.5203	10.50419	98	1	50	12	31.2008	31.1912
34	5	17	39	10.8379	10.8225	99	1	49	5	31.5202	31.5126
35	5	8	34	11.1560	11.1408	100	1	48		31.8362	31.8309
36	5			11.4737	11.4591	101	1	46	56	32.1537	32.1492
37	4	51	54	11.7913	11.7774	102	1	45	53	32.4725	32.4675
38	4	44	13	12.1093	12.0957	103	1	44	51	32.7923	32.7858
39	4	36	55	12.4278	12.4140	104	1	43	51	33.1080	33.1041
40	4	30		12.7455	12.7323	105	1	42	51	33.4298	33.4224
41	4	23	25	13.0634	13.0506	106	1	41	53	33.7449	33.7407
42	4	17	9	13.3820	13.3689	107	1	40	56	34.0644	34.0590
43	4	11	10	13.6992	13.6872	108	1	40		34.3823	34.3773
44	4	5	27	14.0178	14.0056	109	1	39	5	34.7003	34.6956
45	4			14.3356	14.3239	110	1	38	11	35.0183	35.0140
46	3	54	47	14.6536	14.6422	111	1	37	18	35.3361	35.3323
47	3	49	47	14.9720	14.9605	112	1	36	26	35.6536	35.6506
48	3	45		15.2898	15.2788	113	1	35	35	35.9706	35.9685
49	3	40	24	15.6084	15.7971	114	1	34	44	36.2932	36.2872
50	3	36		15.9260	15.9154	115	1	33	55	36.6088	36.6055
51	3	31	46	16.2439	16.2337	116	1	33	6	36.9298	36.9238
52	3	27	42	16.5616	16.5520	117	1	32	18	37.2498	37.2421
53	3	23	46	16.8809	16.8703	118	1	31	32	37.5618	37.5004
54	3	20		17.1984	17.1886	119	1	30	45	37.8859	37.8787
55	3	16	22	17.5163	17.5071	120	1	30		38.2015	38.1970
56	3	12	51	17.8353	17.8253	121	1	29	15	38.5225	38.5154
57	3	9	28	18.1535	18.1436	122	1	28	31	38.8415	38.8337
58	3	6	12	18.4717	18.4619	123	1	27	48	39.1585	39.1520
59	3	3	3	18.7892	18.7802	124	1	27	6	39.4752	39.4703
60	3			19.1073	19.0985	125	1	26	24	39.7929	39.7886
61	2	57	3	19.4254	19.4168	126	1	25	43	40.1101	40.1069
62	2	54	12	19.7429	19.7351	127	1	25	2	40.4323	40.4252
63	2	51	26	20.0613	20.0534	128	1	24	22	40.7517	40.7435
64	2	48	45	20.3800	20.3717	129	1	23	43	41.0681	41.0618
65	2	46	9	20.6987	20.6900	130	1	23	5	41.3811	41.3801
66	2	43	38	21.0168	21.0084	131	1	22	27	41.6989	41.6984
67	2	41	12	21.3338	21.3267	132	1	21	49	42.0217	42.0168

Table Showing the Diameter of a Wheel for a Given Pitch, or the Pitch for a Given Diameter.

(*Continued,*)

NO. OF TEETH.	ANGLE.	CHORD DIAM.	ARC DIAM.	NO. OF TEETH	ANGLE.	CHORD DIAM.	ARC DIAM.
	° ′ ″				° ′ ″		
133	1 21 12	42.3407	42.3351	167	1 4 40	53.1642	53.1576
134	1 20 36	42.6559	42.6534	168	1 4 17	53.4811	53.4759
135	1 20	42.9759	42.9717	169	1 3 54	53.8019	53.7942
136	1 19 25	43.2913	43.2900	170	1 3 32	54.1124	54.1125
137	1 18 50	43.6116	43.6083	171	1 3 9	54.4408	54.4398
138	1 18 16	43.9273	43.9266	172	1 2 47	54.7587	54.7491
139	1 17 42	44.2476	44.2449	173	1 2 26	55.0657	55.0674
140	1 17 9	44.5630	44.5600	174	1 2 4	55.3910	55.3857
141	1 16 36	44.8829	44.8815	175	1 1 43	55.7051	55.7040
142	1 16 3	45.2074	45.1998	176	1 1 22	56.0227	56.0224
143	1 15 31	45.5267	45.5182	177	1 1	56.3440	56.3407
144	1 15	45.8403	45.8365	178	1 0 40	56.6690	56.6590
145	1 14 22	46.1582	46.1548	179	1 0 20	56.9820	56.9773
146	1 13 58	46.4805	46.4731	180	1	57.2987	57.2956
147	1 13 28	46.7968	46.7914	181	0 59 40	57.6187	57.6139
148	1 12 58	47.1174	47.1997	182	0 59 20	57.9424	57.9322
149	1 12 29	47.4316	47.4280	183	0 59 1	58.2532	58.2505
150	1 12	47.7500	47.7463	184	0 55 42	58.5675	58.5688
151	1 11 31	48.0726	48.0646	185	0 58 23	58.8852	58.8871
152	1 11 3	48.3883	48.3829	186	0 58 4	59.2063	59.2055
153	1 10 35	48.7082	48.7012	187	0 57 45	59.5308	59.5238
154	1 10 8	49.0207	49.0196	188	0 57 27	59.8417	59.8421
155	1 9 41	49.3372	49.3375	189	0 57 9	60.1558	60.1604
156	1 9 14	49.6579	49.6562	190	0 56 51	60.4732	60.4787
157	1 8 47	49.9826	49.9745	191	0 56 33	60.7940	60.7970
158	1 8 21	50.2995	50.2928	192	0 56 15	61.1182	61.1153
159	1 7 55	50.6204	50.6111	193	0 55 58	61.4276	61.4336
160	1 7 30	50.9328	50.9294	194	0 55 40	61.7586	61.7519
161	1 7 5	51.2492	51.2460	195	0 55 23	62.0745	62.0702
162	1 6 40	51.5694	51.5660	196	0 55 6	62.3937	62.3885
163	1 6 15	51.8937	51.8843	197	0 54 49	62.7161	62.7069
164	1 5 51	52.2089	52.2026	198	0 54 33	63.0227	63.0252
165	1 5 27	52.5279	52.5210	199	0 54 16	63.3517	63.3435
166	1 5 4	52.8374	52.8393	200	0 54	63.6646	63.6618

To Find the Pitch Diameter of a Gear Wheel.

RULE: Divide the number of teeth by the pitch.

This rule applies only when it is required to find the pitch diameter from the diametral pitch.

When the circular pitch is used the rule is:

Multiply the pitch and number of teeth together, and divide the product by 3.1416.

When the chordal pitch is used, the rule is:

Divide 180 degrees by the number of teeth. Find the sine of the quotient, and divide it into the given pitch. The quotient will be the pitch diameter of the gear.

NOTE: See table of natural sines for sine of angle found by dividing 180 degrees by the number of teeth.

To Find the Diameter of a Gear Blank, the Pitch and the Number of Teeth Being Given.

Figuring from the diametral pitch.

RULE: Divide the number of teeth by the pitch the quotient will be the pitch diameter.

Figuring from the circular pitch.

RULE: Multiply the number of teeth by the pitch and divide the product by 3.1416, and the quotient will be the pitch diameter.

Figuring from the chordal pitch.

RULE: Divide 180 degrees by the number of teeth. Find the sine of the quotient. Divide the pitch by the sine, and the quotient will be the pitch diameter of gear blank.

To Find the Pitch of a Gear, When the Diameter Pitch is Wanted.

RULE: Add 2 to the number of teeth and divide by the whole diameter of gear.

When the Circular Pitch is Wanted.

RULE: Divide the circumference of the pitch circle by the number of teeth.

When the Chordal Pitch is Wanted.

RULE: Divide 180 degrees by the number of teeth. Take the sine of this angle and multiply it by the pitch diameter.

To find outside diameter of spur gear blanks, add two parts of the pitch to the pitch diameter; thus, for an 8-pitch gear of forty teeth the outside diameter of blank is 42-8ths, equal to 5¼ inches; for a 12-pitch gear of thirty-six teeth the outside diameter of blank is 38-12ths, equal to 3⅛ inches; for a 16-pitch gear of forty-six teeth the outside diameter of blank is 48-16ths, equals 3 inches. This rule applies to gears of any pitch, and if always at hand will insure blanks of the right size, saving time and annoyance.

The diametral pitch of a gear is the number of teeth to each inch of its pitch diameter, and when understood is so simple and convenient that few gears are now cut by the almost obsolete circular pitch method.

To obtain the distance between the centers of two gears, add the number of teeth together and divide half the sum by the diametral pitch, thus: If two gears have 40 and 30 teeth respectively, and are 5-pitch, add 40 and 30, making 70, divide by 2 and then divide this quotient 35 by the diametral pitch 5, and the result, 7 inches, is the distance between centers

Spur gear blanks are always of the same denomination as the pitch. The diameter of 8-pitch gear cannot be in 10ths or 12ths of an inch, nor a 16 pitch in 20ths or 40ths. but a 6-pitch gear is always in 6ths, a 10-pitch in 10ths, a 48 in 48ths, etc.

GRADING.

CUBICAL CONTENTS OF SECTIONS 100 FEET LONG.

Table 1. Level Cuttings. Roadway 14 feet wide, side-slopes 1½ to 1. For single track embankment.

HEIGHT IN FT	.0	.1	.2	.3	.4	.5	.6	.7	.8	.9
	C. Yds.	C. Yds.	C. Yds.	C. Yds.	C. Yds.	C. Yds.	C. Yds.	C. Yds.	C. Yds.	C. Yds.
0		5.24	10.6	16.1	21.6	27.3	33.1	39.0	45.0	51.2
1	57.4	63.8	70.2	76.8	83.5	90.3	97.2	104.2	111.3	118.6
2	125.9	133.4	141.0	148.6	156.4	164.4	172.4	180.5	138.7	197 1
3	205.6	214.1	222.8	231.6	240.5	249.5	258.7	267.9	277 3	286.7
4	296.3	306.0	315.8	325.7	335.7	345.8	356.1	366.4	376.9	387.5
5	398.1	408.9	419.9	430.9	442.0	453.2	464.6	476.1	487.6	499.3
6	511.1	523.0	535.0	547.2	559.4	571.8	584.2	596.8	609.5	622.3
7	635.2	648.2	661.3	674.6	687.9	701 4	714.9	728.6	742.4	756.3
8	770.3	784.5	798.7	813.1	827.5	842.1	856.8	871.6	886.5	901 5
9	916.7	931.9	947.3	962.7	978.3	994.0	1010	1026	1042	1058
10	1074	1090	1107	1123	1140	1157	1174	1191	1208	1225
11	1243	1260	1278	1295	1313	1331	1349	1367	1385	1404
12	1422	1441	1459	1478	1497	1516	1535	1554	1574	1593
13	1613	1633	1652	1672	1692	1712	1733	1753	1773	1794
14	1815	1835	1856	1877	1898	1920	1941	1962	1984	2006
15	2028	2050	2072	2094	2116	2138	2161	2183	2206	2229
16	2252	2275	2298	2321	2344	2368	2391	2415	2439	2463
17	2487	2511	2535	2559	2584	2608	2633	2658	26-3	2708
18	2733	2759	2784	2809	2835	2861	2886	2912	2938	2964
19	2991	3017	3044	3070	3097	3124	3151	3178	3205	3232
20	3259	3287	3314	3342	3370	3398	3426	3454	3482	3510
21	3539	3567	3596	3625	3654	3683	3712	3741	3771	3800
22	3830	3859	3889	3919	3949	3979	4009	4040	4070	4101
23	4132	4162	4193	4224	4255	4287	4318	4349	4381	4413
24	4444	4476	4508	4541	4573	4605	4638	4670	4703	4736
25	4769	4802	4835	4868	4901	4935	4968	5002	5036	5070
26	5104	5138	5172	5206	5241	5275	5310	5345	5380	5415
27	5450	5485	5521	5556	5592	5627	5663	5699	5735	5771
28	5807	5844	5880	5917	5953	5990	6027	6064	6101	6139
29	6176	6213	6251	6289	6326	6364	6402	6440	6479	6517
30	6556	6594	6633	6672	6711	6750	6789	6828	6867	6907
31	6946	6986	7026	7066	7106	7146	7186	7226	7267	7307
32	7348	7389	7430	7471	7512	7553	7595	7636	7678	7719
33	7761	7803	7845	7887	7929	7972	8014	8057	8099	8142
34	8185	8228	8271	8315	8358	8401	8445	8489	8532	8576
35	8620	8664	8709	8753	8798	8842	8887	8932	8976	9022
36	9067	9112	9157	9203	9248	9294	9340	9386	9432	9478
37	9524	9570	9617	9663	9710	9757	9804	9851	9898	9945
38	9993	10040	10088	10135	10183	10231	10279	10327	10375	10424
39	10472	10521	10569	10618	10667	10716	10765	10815	10864	10913
40	10963	11013	11062	11112	11162	11212	11263	11313	11364	11414
41	11465	11516	11567	11618	11669	11720	11771	11823	11873	11926
42	11978	12029	12081	12134	12186	12238	12291	12343	12396	12449
43	12502	12555	12608	12661	12715	12768	12822	12875	12929	12983
44	13037	13091	13145	13200	13254	13309	13363	13418	13473	13528
45	13583	13639	13694	13749	13805	13861	13916	13972	14028	14084
46	14141	14197	14254	14310	14367	14424	14480	14537	14595	14652
47	14709	14767	14824	14882	14940	14998	15056	15114	15172	15230
48	15289	15347	15406	15465	15524	15583	15642	15701	15761	1582O
49	15880	15939	15999	16059	16119	16179	16239	16300	16360	16421
50	16481	16542	16603	16664	16725	16787	16848	16909	16971	17033
51	17094	17156	17218	17280	17343	17405	17467	17530	17593	17656
52	17719	17782	17845	17908	17971	18035	18098	18162	18226	18290
53	18354	18418	18482	18546	18611	18675	18740	18805	18870	18935
54	19000	19065	19131	19196	19262	19327	19393	19459	19525	19591
55	19657	19724	19790	19857	19923	19990	20057	20124	20191	20259
56	20326	20393	20461	20529	20596	20664	20732	20800	20869	20937
57	21005	21074	21143	21212	21280	21349	21419	21488	21557	21627
58	21696	21766	21836	21906	21976	22046	22116	22186	22257	22327
59	22398	22469	22540	22611	22682	22753	22825	22896	22968	23039
60	23111	23183	23255	23327	23399	23472	23544	23617	23689	23762

For continuation to 100 feet see Table 7.

Grading.—*Continued.*

CUBICAL CONTENTS OF SECTIONS 100 FEET LONG.

Table 2. Level cuttings. Roadway 24 feet wide, side-slopes 1½ to 1. For double-track embankment.

HEIGHT IN FT	.0	.1	.2	.3	.4	.5	.6	.7	.8	.9
	C. Yds.	C. Yds.	C. Yds.	C. Yds.	C. Yds.	C. Yds.	C. Yds	C. Yds.	C. Yds.	C. Yds.
0		8.94	18.0	27.2	36.4	45.8	55.3	64.9	74.7	84 5
1	94.4	104.5	114.7	124.9	135.3	145.8	156.4	167 2	178.0	188 9
2	200.0	211.2	222.4	233.8	245.3	256.9	268.6	280.5	292.4	304 4
3	316.6	328.9	341.2	353.7	366.3	379.0	391.9	404.8	417.8	431.0
4	444.4	457.8	471.3	484.9	498.6	512.4	526.4	540.4	554.6	568.8
5	583.3	597.8	612.4	627.1	642.0	656.9	671.9	687.1	702.3	717.7
6	733.3	748.9	764.7	780.5	796.4	812.5	828.7	844.9	861.3	877.8
7	894.4	911 2	928.0	944.9	962.0	979.2	996 4	1014	1031	1049
8	1067	1085	1102	1121	1139	1157	1175	1194	1212	1231
9	1250	1269	1288	1307	1326	1346	1365	1385	1405	1425
10	1444	1465	1485	1505	1525	1546	1566	1587	1608	1629
11	1650	1671	1692	1714	1735	1757	1779	1800	1822	1845
12	1867	1889	1911	1934	1956	1979	2002	2025	2048	2071
13	2094	2118	2141	2165	2189	2213	2236	2261	2285	2309
14	2333	2358	2382	2407	2432	2457	2482	2507	2532	2558
15	2583	2609	2635	2661	2686	2713	2739	2765	2791	2818
16	2844	2871	2898	2925	2952	2979	3006	3034	3061	3089
17	3117	3145	3172	3201	3229	3257	3285	3314	3342	3371
18	3400	3429	3458	3487	3516	3546	3575	3605	3635	3665
19	3694	3725	3755	3785	3815	3846	3876	3907	3938	3969
20	4000	4031	4062	4094	4125	4157	4189	4221	4252	4285
21	4317	4349	4381	4414	4446	4479	4512	4545	4578	4611
22	4644	4678	4711	4745	4779	4813	4846	4881	4915	4949
23	4983	5018	5052	5087	5122	5157	5192	5227	5262	5298
24	5333	5369	5405	5441	5476	5513	5549	5585	5621	5658
25	5694	5731	5768	5805	5842	5879	5916	5954	5991	6029
26	6067	6105	6142	6181	6219	6257	6295	6334	6372	6411
27	6450	6489	6528	6567	6606	6646	6685	6725	6765	6885
28	6844	6885	6925	6965	7005	7046	7086	7127	7168	7209
29	7250	7291	7332	7374	7415	7457	7499	7541	7582	7625
30	7667	7709	7751	7794	7836	7879	7922	7965	8008	8051
31	8094	8138	8181	8225	8269	8313	8356	8401	8445	8489
32	8533	8578	8622	8667	8712	8757	8802	8847	8892	8938
33	8983	9029	9075	9121	9166	9212	9259	9305	9351	9398
34	9444	9491	9538	9585	9632	9679	9726	9774	9822	9822
35	9917	9965	10012	10061	10109	10157	10205	10254	10302	10351
36	10400	10449	10498	10547	10596	10646	10695	10745	10795	10845
37	10894	10945	10995	11045	11095	11146	11196	11247	11298	11349
38	11400	11451	11502	11554	11605	11657	11709	11761	11812	11865
39	11917	11969	12021	12074	12126	12179	12232	12285	12338	12391
40	12444	12498	12551	12605	12659	12713	12766	12821	12875	12929
41	12983	13038	13092	13147	13202	13257	13312	13367	13422	13478
42	13533	13589	13645	13701	13756	13813	13869	13925	13981	14038
43	14094	14151	142 8	14265	14322	14379	14436	14494	14551	14609
44	14667	14725	14782	14840	14899	14957	15015	15074	15132	15191
45	15250	15309	15368	15427	15486	15546	15605	15665	15725	15785
46	15844	15905	15965	16025	16085	16146	16206	16267	16328	16389
47	16450	16511	16572	16634	16695	16757	16819	16881	16942	17005
48	17067	17129	17191	17254	17316	17379	17442	17505	17 68	17631
49	17694	17758	17821	17885	17949	18013	18076	18141	18205	18269
50	18333	18398	18462	18527	18592	18657	18722	18787	18852	18918
51	18983	19049	19115	19181	19246	19313	19379	19445	19511	19578
52	19644	19711	19778	19845	19912	19979	20046	20114	20181	20249
53	20317	20385	20452	20521	20589	20657	20725	20794	20862	20931
54	21000	21069	21138	21207	21276	21346	21415	21485	21555	21625
55	21694	21765	21835	21905	21975	2 046	22116	22187	22258	22329
56	22400	22471	22542	22614	22685	22757	22829	22901	22972	23045
57	23117	23189	23261	23334	234 6	23479	23552	23625	23698	23771
58	23844	23918	23991	24065	24139	24213	24286	24361	24435	24509
59	24583	24658	24732	24807	24882	24957	25032	25107	25182	25258
60	25333	25409	25485	25561	25636	25713	25789	25865	25941	26018

For continuation to 190 feet, see Table 7.

Grading.—*Continued.*

CUBICAL CONTENTS OF SECTIONS 100 FEET LONG.

Table 3. Level Cuttings. Roadway 18 feet wide, size slopes 1 to 1. For single-track excavation.

HEIGHT IN FT.	.0	.1	.2	.3	.4	.5	.6	.7	.8	.9
	C. Yds.	C. Yds.	C. Yds.	C. Yds.	C. Yds.	C. Yds.	C. Yds.	C. Yds.	C. Yds.	C. Yds.
0		6.70	13.5	20.3	27.3	34.3	41.3	48.5	55.7	63.0
1	70.4	77.8	85.3	92.9	100.6	108.3	116.1	124.0	132.0	140.0
2	148.1	156.3	164.6	172.9	181.3	189.8	198.4	207 0	215.7	224.5
3	233.3	242.3	251.3	260.3	269.5	278.7	288.0	297.4	306.8	316.3
4	325.9	335.6	345.3	355.1	365.0	375.0	385.0	395.1	405.3	415.6
5	425.9	436.3	446.8	457.4	468.0	478.7	489.5	500.3	511.3	522.3
6	533.3	544.5	555.7	567.0	578.4	589.8	601.3	612.9	624.6	636.3
7	648 1	660.0	672.0	684.0	696.1	708.3	720.6	732.9	745.3	757.8
8	770.4	783 0	795.7	808.5	821.3	834.3	847.3	860.3	873.5	886.7
9	900.0	913.4	926.8	940.3	953.9	967.6	981.3	995.1	1009	1023
10	1037	1051	1065	1080	1094	1108	1123	1137	1152	1167
11	1181	1196	1211	1226	1241	1256	1272	1287	1302	1318
12	1333	1349	1365	1380	1396	1412	1428	1444	1460	1476
13	1493	1509	1525	1542	1558	1575	1592	1608	1625	1642
14	1659	1676	1693	1711	1728	1745	1763	1780	1798	1816
15	1833	1851	1869	1887	1905	1923	1941	1960	1978	1996
16	2015	2033	2052	2071	2089	2108	2127	2146	2165	2184
17	2204	2223	2242	2262	2281	2301	2321	2340	2360	2380
18	2400	2420	2440	2460	2481	2501	2521	2542	2562	2583
19	2604	2624	2645	2666	2687	2708	2729	2751	2772	2793
20	2815	2836	2858	2880	2901	2923	2945	2967	2989	3011
21	3033	3056	3078	3100	3123	3145	3168	3191	3213	3236
22	3259	3282	3305	3328	3352	3375	3398	3422	3445	3469
23	3493	3516	3540	3564	3588	3612	3636	3660	3685	3709
24	3733	3753	3782	3807	3823	3856	3881	3906	3931	3956
25	3981	4007	4032	4057	4083	4108	4134	4160	4185	4211
26	4237	4263	4289	4315	4341	4368	4394	4420	4447	4473
27	4500	4527	4553	4580	4607	4634	4661	4688	4716	4743
28	4770	4798	4825	4853	4881	4908	4936	4964	4992	5020
29	5048	5076	5105	5133	5161	5190	5218	5247	5276	5304
30	5333	5362	5391	5420	5449	5479	5508	5537	5567	5596
31	5626	5656	5685	5715	5745	5775	5805	5835	5865	5896
32	5926	5956	5987	6017	6045	6079	6109	6140	6171	6202
33	6233	6264	6296	6327	6358	6390	6421	6453	6485	6516
34	6548	6580	6612	6644	6676	6708	6741	6773	6805	6838
35	6870	6903	6936	6968	7001	7034	7067	7100	7133	7167
36	7200	7233	7267	7300	7334	7368	7401	7435	7469	7503
37	7537	7574	7605	7640	7674	7708	7743	7777	7812	7847
38	7881	7910	7951	7986	8021	8056	8092	8127	8162	8198
39	8233	8269	8305	8340	8376	8412	8448	8484	8520	8556
40	85 3	8629	8665	8702	8738	8775	8812	8848	8885	8922
41	8959	8996	9033	9071	9108	9145	9183	9220	9258	9296
42	9333	9371	9409	9447	9485	9523	9561	9600	9638	9676
43	9715	9753	9792	9831	9869	9908	9947	9986	10025	10063
44	10104	10143	10182	10222	10261	10301	10341	10380	10420	10460
45	10500	10540	10580	10620	10661	10701	10741	10782	10822	10863
46	10904	10944	10985	11026	11067	11108	11149	11191	11232	11273
47	11315	11356	11398	11440	11481	11523	11565	11607	11649	11691
48	11733	11776	11818	11860	11903	11945	11988	12031	12073	12116
49	12159	12202	12245	12288	12332	12375	12418	12462	12505	12549
50	12593	12636	12680	12724	12768	12812	12856	12900	12945	12989
51	13033	13078	13122	13167	13212	13256	13301	13346	13391	13436
52	13481	13527	13572	13617	13663	13708	13754	13800	13845	13891
53	13937	13983	14029	14075	14121	14168	14214	14260	14307	14353
54	14400	14447	14493	14540	14587	14634	14681	14728	14776	14823
55	14870	14918	14965	15013	15061	15108	15156	15204	15252	15300
56	15348	15396	15445	15493	15541	15590	15638	15687	15736	15784
57	15833	15882	15931	15980	16029	16079	16128	16177	16227	16276
58	16326	16376	16425	16475	16525	16575	16625	16675	16725	16776
59	16826	16876	16927	16977	17028	17079	17129	17180	17231	17282
60	17333	17385	17436	17487	17538	17590	17641	17693	17745	17796

For continuation to 100 feet deep, see Table 7.

Grading.—*Continued.*

CUBICAL CONTENTS OF SECTIONS 100 FEET LONG.

Table 4. Level Cuttings. Roadway 18 feet wide, side-slopes 1½ to 1. For single track excavation.

DEPTH IN FT.	.0	.1	.2	.3	.4	.5	.6	.7	.8	.9
	C. Yds.	C. Yds.	C. Yds.	C. Yds.	C. Yds.	C. Yds.	C. Yds.	C. Yds.	C. Yds.	C. Yds.
0		6.72	13.6	20.5	27.6	34.7	42.0	49.4	56.9	64.5
1	72.2	80.1	88.0	96.1	104.2	112.5	120.9	129.4	138.0	146.7
2	155.5	164.5	173.5	182.7	191.9	201.3	210.8	220.4	230.1	240.0
3	249.9	260.0	270.1	280.4	290.8	301.3	311.9	322.6	333.4	344.5
4	355.5	366.7	378.0	389.4	400.9	412.5	424.2	436.0	448.0	460.0
5	472.2	484.5	496.9	509.4	522.0	534.7	547.6	560.5	573.6	586.7
6	600.0	613.4	626.9	640.5	654.2	668.1	682.0	696.1	710.2	724.5
7	738.9	753.4	768.0	782.7	797.6	812.5	827.6	842.7	858.0	873 4
8	888.9	904.5	920.2	936.1	952.0	968.1	984.2	1001	1017	1033
9	1050	1067	1084	1101	1118	1135	1152	1169	1187	1205
10	1222	1240	1258	1276	1294	1313	1331	1349	1368	1387
11	1406	1425	1444	1463	1482	1501	1521	1541	1560	1580
12	1600	1620	1640	1661	1681	1701	1722	1743	1764	1785
13	1806	1827	1848	1869	1891	1913	1934	1956	1978	2000
14	2022	2045	2067	2089	2112	2135	2158	2181	2204	2227
15	2250	2273	2297	2321	2344	2368	2392	2416	2440	2465
16	2489	2513	2538	2563	2588	2613	2638	2663	2688	2713
17	2739	2765	2790	2816	2842	2868	2894	2921	2947	2973
18	3000	3027	3054	3081	3108	3135	3162	3189	3217	3245
19	3272	3300	3328	3356	3384	3413	3441	3469	3498	3527
20	3556	3585	3614	3643	3672	3701	3731	3761	3790	3820
21	3850	3880	3910	3941	3971	4001	4032	4063	4094	4125
22	4156	4187	4218	4249	4281	4313	4344	4376	4408	4440
23	4472	4505	4537	4569	4602	4635	4668	4701	4734	4767
24	4800	4833	4867	4901	4934	4968	5002	5036	5070	5105
25	5139	5173	5208	5243	5278	5313	5348	5383	5418	5453
26	5489	5525	5560	5596	5632	5668	5704	5741	5777	5813
27	5850	5887	5924	5961	5998	6035	6072	6109	6147	6185
28	6222	6260	6298	6336	6374	6413	6451	6489	6528	6567
29	6606	6645	6684	6723	6762	6801	6841	6881	6920	6960
30	7000	7040	7080	7121	7161	7201	7242	7283	7324	7365
31	7406	7447	7488	7529	7571	7613	7654	7696	7738	7780
32	7822	7865	7907	7949	7992	8035	8078	8121	8164	8207
33	8250	8293	8337	8381	8424	8468	8512	8556	8600	8645
34	8689	8733	8778	8823	8868	8913	8958	9003	9048	9093
35	9139	9185	9230	9276	9322	9368	9414	9461	9507	9553
36	9600	9647	9694	9741	9788	9835	9882	9929	9977	10025
37	10072	10120	10168	10216	10264	10313	10361	10409	10458	10507
38	10556	10605	10654	10703	10752	10801	10851	10901	10950	11000
39	11050	11100	11150	11200	11251	11301	11352	11403	11454	11505
40	11556	11607	11658	11709	11761	11813	11864	11916	11968	12020
41	12072	12125	12177	12229	12282	12335	12388	12441	12494	12547
42	12600	12653	12707	12761	12814	12868	12922	12976	13030	13085
43	13139	12193	13248	13303	13358	13413	13468	13523	13578	13633
44	13689	13745	13800	13856	13912	13968	14024	14081	14137	14193
45	14250	14307	14364	14421	14478	14535	14592	14649	14707	14765
46	14822	14880	14938	14996	15054	15113	15171	15229	15288	15347
47	15406	15465	15524	15583	15642	15701	15761	15821	15880	15940
48	16000	16060	16120	16181	16241	16301	16362	16423	16484	16545
49	16606	16667	16728	16789	16851	16913	16974	17036	17098	17160
50	17222	17285	17347	17409	17472	17535	17598	17661	17724	17787
51	17850	17913	17977	18041	18104	18168	18232	18298	18360	18425
52	18489	18553	18618	18683	18748	18813	18878	18943	19008	19073
53	19139	19205	19270	19336	19402	19468	19534	19601	19667	19733
54	19800	19867	19934	20000	20068	20135	20202	20269	20337	20405
55	20472	20540	20608	20676	20744	20813	20881	20949	21018	21087
56	21156	21225	21294	21363	21432	21501	21571	21641	21710	21780
57	21750	21920	21990	22061	22131	22201	22272	22343	22414	22485
58	22556	22627	22698	22769	22841	22913	22984	23056	23128	23200
59	23272	23345	23417	23489	23562	23635	23708	23781	23854	23927
60	24000	24073	24147	24221	24294	24368	24442	24516	24590	24665

For continuation to 100 feet see Table 7.

Grading.—*Continued.*

CUBICAL CONTENTS OF SECTIONS 100 FEET LONG.

Table 5. Level Cuttings. Roadway 23 feet wide, side slopes 1 to 1. For double-track excavation.

DEPTH IN FT.	.0	.1	.2	.3	.4	.5	.6	.7	.8	.9
	C. Yds.	C. Yds.	C. Yds.	C. Yds.	C. Yds.	C. Yds.	C. Yds.	C. Yds.	C. Yds.	C. Yds.
0		10.4	20.9	31.4	42.1	52.8	63.6	74.4	85.3	96.3
1	107.4	118.6	129.8	141.1	152.4	163.9	175.4	187.0	198.7	210.4
2	222.2	234.1	246.1	258.1	270.2	282.4	294.7	307.0	3 9.4	331.9
3	344.4	357.1	369.8	382.6	395.4	408.3	421.3	434.4	447.6	460.8
4	474.1	487.4	500.9	514.4	528.0	541.7	555.4	569.2	583.1	597.1
5	611.1	625.2	639.4	653.7	668.0	682.4	696.9	711 4	726.1	740.8
6	755 6	770.4	785.4	800.4	815.5	830.6	845.8	861.1	876.5	891.9
7	907 5	923 0	938.7	954.5	970.3	986.2	1002	1018	1034	1050
8	1067	1083	1099	1116	1132	1149	1166	1182	1199	1216
9	1233	1250	1267	1285	1302	1319	1337	1354	1372	1390
10	1407	1425	1443	1461	1479	1497	1515	1534	1552	1570
11	1589	1607	1626	1645	1664	1682	1701	1720	1739	1759
12	1778	1797	1816	1836	1855	1875	1895	1914	1934	1954
13	1974	1994	2014	2034	2055	2075	2095	2116	2136	2157
14	2178	2199	2219	2240	2261	2282	2304	2325	2346	2367
15	2389	2410	2432	2454	2475	2497	2519	2541	2563	2585
16	2607	2630	2652	2674	2697	2719	2742	2765	2788	2810
17	2833	2856	2879	2903	2926	2949	2972	2996	3019	3043
18	3067	3090	3114	3138	3162	3186	3210	3234	3259	32 3
19	3307	3332	3356	3381	3406	3431	3455	3480	3505	3530
20	3556	3581	3606	3631	3657	3682	3708	3734	3759	3785
21	3811	3837	3863	3889	3915	3942	3968	3994	4021	4047
22	4074	4101	4128	4154	4181	4208	4235	4263	4290	4317
23	4344	4372	4399	4427	4455	4482	4510	4538	4566	4594
24	4622	4650	4679	4707	4735	4764	4792	4821	4850	4879
25	4907	4936	4965	4994	5024	5053	5082	5111	5141	5170
26	5200	5230	5259	5289	5319	5349	5379	5409	5439	5470
27	5500	5530	5561	5591	5622	5653	5684	5714	5745	5776
28	5807	5839	5870	5901	5932	5964	5995	6027	6059	6090
29	6122	6154	6186	6218	6250	6282	6315	6347	6379	6412
30	6444	6477	6510	6543	6575	6608	6641	6674	6708	6741
31	6774	6807	6841	6874	6908	6942	6975	7009	7043	7077
32	7111	7145	7179	7214	7248	7282	7317	7351	7386	7421
33	7456	7490	7525	7560	7595	7631	7666	7701	7736	7772
34	7807	7843	7879	7914	7950	7986	8022	8058	8094	8130
35	8167	8203	8239	8276	8312	8349	8386	8423	8459	8496
36	8533	8570	8608	8645	8682	8719	8757	8794	8832	8870
37	8907	8945	8983	9021	9059	9097	9135	9174	9212	9250
38	9289	9327	9366	9407	9444	9482	9521	9560	9599	9639
39	9678	9717	9756	9796	9835	9875	9915	9954	9994	10034
40	10074	10114	10154	10194	10235	10275	10315	10356	10396	10437
41	10478	10519	10559	10600	10641	10682	10724	10765	10806	10847
42	10889	10930	10972	11014	11055	11097	11139	11181	11223	11265
43	11307	11350	11392	11434	11477	11519	11562	11605	11648	11690
44	11733	11776	11819	11863	11906	11949	11992	12036	12079	12123
45	12167	12210	12254	12298	12342	12386	12430	12474	12519	12563
46	12607	12652	12696	12741	12786	12831	12875	12920	12965	13010
47	13056	13101	13146	13191	13237	13282	13328	13374	13419	13465
48	13511	13587	13603	13649	13695	13742	13788	13834	13881	13927
49	13974	14021	14068	14114	14161	14208	14255	14303	14350	14397
50	14444	14492	14539	14587	14635	14682	14730	14778	14826	14874
51	14922	14970	15019	15067	15115	15164	15212	15261	15310	15359
52	15407	15456	15505	15554	15604	15653	15702	15751	15801	15850
53	15900	15950	15999	16049	16099	16149	16199	16249	16299	16350
54	16400	16456	16501	16551	16602	16653	16704	16754	16805	16856
55	16907	16959	17010	17061	17112	17164	17215	17267	17319	17370
56	17422	17474	17526	17578	17630	17682	17735	17787	17839	17892
57	17944	17997	18050	18103	18155	18208	18261	18314	18368	18421
58	18474	18527	18581	18634	18688	18742	18795	18849	18903	18957
59	19011	19065	19119	19174	19228	19282	19337	19391	19446	19501
60	19556	19610	19665	19720	19775	19831	19886	19941	19996	20052

For continuation to 100 feet, see Table 7.

Grading.—*Continued.*

CUBICAL CONTENTS OF SECTIONS 100 FEET LONG.

Table 6. Level cuttings. Roadway 28 feet wide, side-slopes 1½ to 1. For double-track excavation.

DEPTH IN FT.	.0	.1	.2	.3	.4	.5	.6	.7	.8	.9
	C. Yds.	C. Yds.	C. Yds.	C. Yds.	C. Yds.	C. Yds.	C. Yds.	C. Yds.	C. Yds.	C. Yds.
0		10.4	21.0	31.6	42.4	53 2	61.2	75.9	86.5	97.9
1	109.3	120.8	132.5	144.3	156.1	168.1	180.2	192.4	204.8	217.2
2	229.6	242.3	255.0	267.9	280.9	294.0	307.2	320.5	334.0	347.5
3	361.2	374.9	388.8	402 8	416.9	431.1	445.4	459.9	474.4	489.1
4	503.7	518.6	533.6	548.6	563.9	579.3	594.7	610.2	625.8	641.6
5	657.5	673.4	689.5	705.7	722.1	738.5	755.0	771.7	788.4	805.3
6	822.2	839.3	856.5	873.8	891.2	908.8	926.4	944.2	962.0	980.0
7	998.1	1016	1035	1053	1072	1090	1109	1128	1147	1166
8	1185	1204	1224	1243	1263	1283	1303	1322	1343	1363
9	1383	1403	1424	1445	1465	1486	1507	1528	1549	1571
10	1592	1614	1635	1657	1679	1701	1723	1749	1767	1790
11	1812	1835	1858	1881	1904	1927	1950	1973	1997	2020
12	2044	2068	2092	2116	2140	2164	2164	2213	2238	2262
13	2287	2312	2337	2362	2387	2413	2438	2464	2489	2515
14	2541	2567	2593	2619	2645	2672	2698	2725	2752	2779
15	2806	2833	2860	2887	2915	2942	2970	2997	3025	3053
16	3081	3109	3138	3166	3195	3223	3252	3281	3310	3339
17	3368	3397	3427	3456	3486	3516	3546	3576	3606	3636
18	3667	3697	3728	3758	3789	3820	3851	3882	3913	3944
19	3975	4007	4039	4070	4102	4134	4166	4198	4231	4263
20	4296	4328	4361	4394	4427	4460	4493	4527	4560	4594
21	4627	4661	4695	4729	4763	4797	4832	4866	4900	4935
22	4970	5005	5040	5075	5111	5146	5181	5217	5253	5288
23	5324	5360	5396	5432	5469	5505	5542	5578	5615	5652
24	5689	5726	5763	5800	5838	5875	5913	5951	5989	6027
25	6065	6103	6141	6179	6218	6257	6295	6334	6373	6412
26	6451	6491	6530	6570	6609	6649	6689	6729	6769	6809
27	6850	6890	6931	6971	7012	7053	7094	7135	7176	7217
28	7259	7300	7342	7384	7426	7468	7510	7552	7594	7637
29	7680	7722	7765	7808	7851	7894	7937	7981	8024	8067
30	8111	8155	8199	8243	8287	8331	8375	8420	8424	8509
31	8554	8598	8643	8688	8734	8779	8824	8870	8915	8961
32	9007	9053	9099	9145	9191	9238	9284	9331	9378	9425
33	9472	9519	9566	9613	9661	9708	9756	9804	9851	9900
34	9948	9997	10045	10093	10142	10190	10239	10288	10337	10386
35	10435	10484	10534	10583	10633	10683	10732	10782	10832	10882
36	10933	10983	11034	11083	11135	11186	11237	11288	11339	11391
37	11443	11494	11546	11598	11649	11701	11753	11806	11858	11910
38	11963	12016	12068	12121	12174	12227	12281	12334	12387	12441
39	12494	12548	12602	12656	12710	12764	12819	12873	12928	12982
40	13037	13092	13147	13202	13257	13312	13368	13423	13479	13535
41	13591	13647	13703	13759	13815	13872	13928	13985	14042	14099
42	14156	14213	14270	14327	14385	14442	14500	14558	14615	14673
43	14731	14790	14848	14906	14965	15024	15082	15141	15200	15259
44	15318	15378	15437	15497	15556	15616	15676	15736	15796	15856
45	15917	15977	16038	16098	16159	16220	16281	16342	16403	16465
46	16526	16587	16649	16711	16773	16835	16897	16959	17021	17084
47	17146	17209	17272	17335	17398	17461	17524	17587	17651	17714
48	17778	17842	17905	17969	18093	18098	18162	18226	18291	18356
49	1842)	18485	18550	18615	18680	18746	18811	18877	18942	19008
50	19074	19140	19206	19272	19339	19405	19472	19538	19605	19672
51	19739	19806	19873	19940	20008	20075	20143	20211	20279	20347
52	20415	20483	20551	20620	20688	20757	20826	20894	20963	21032
53	21102	21171	21241	21310	21380	21450	21519	21589	21659	21730
54	21800	21870	21941	22012	22082	22153	22224	22295	22366	22438
55	22509	22581	22652	22724	22796	22868	22940	23012	23085	23157
56	23230	23302	23375	23448	23521	23594	23667	23741	23814	23888
57	23961	24035	24109	24183	24257	24331	24405	24480	24554	24629
58	24704	24779	24854	24929	25004	25079	25155	25230	25306	25381
59	25457	25533	25609	25686	25762	25838	25915	25992	26068	26145
60	26222	26299	26376	26454	26531	26609	26686	26764	26842	26920

For continuation to 100 feet, see Table 7.

Grading.—*Continued.*

CUBICAL CONTENTS OF SECTIONS 100 FEET LONG.

Table 7. Level Cuttings. Continuation of the six foregoing Tables of Cubic Contents, to 100 feet of height or depth.

HEIGHT OR DEPTH IN FEET.	Table 1.	Table 2.	Table 3.	Table 4	Table 5.	Table 6.
	Cubic Yds.	Cubic Yds.	Cubic Yds.	Cubic Yds.	Cubic Yds.	Cubic Yds.
61	23835	26004	17848	24739	20107	26998
.5	24201	26479	18108	25113	20386	27390
62	24570	26867	18370	25489	20667	27785
.5	24942	27257	18634	25868	20949	28183
63	25317	27650	18900	26250	21233	28583
.5	25694	28046	19168	26635	21519	28986
64	26074	28444	19437	27022	21807	29393
.5	26457	28846	19708	27413	22097	29801
65	26843	29250	19981	27806	22389	30213
.5	27231	29657	20256	28201	22682	30627
66	27622	30067	20533	28600	22978	31044
.5	28016	30479	20812	29001	23275	31464
67	28413	30894	21093	29406	23574	31887
.5	28812	31313	21375	29813	23875	32312
68	29215	31733	21659	30222	24178	32741
.5	29620	32157	21945	30635	24482	33172
69	30028	32583	22233	31050	24789	33605
.5	30438	33013	22523	31468	25097	34042
70	30852	33444	22814	31889	25407	34481
.5	31268	33879	23108	32313	26719	34924
71	31687	34317	23404	32789	26033	35269
.5	32108	34757	23701	33168	26349	35816
72	32533	35200	24000	33600	26667	36267
.5	32960	35646	24301	34035	26986	36720
73	33390	36094	24604	34472	27307	37176
.5	33823	36546	24907	34913	27631	37635
74	34259	37000	25214	35356	27956	38096
.5	34697	37457	25522	35801	28282	38561
75	35139	37917	25832	36250	28611	39028
.5	35582	38379	26144	36701	28942	39498
76	36029	38844	26458	37013	29174	39970
.5	36479	39313	26774	37156	29608	40446
77	36931	39783	27092	38072	29944	40924
.5	37386	40257	27411	38535	30282	41405
78	37844	40733	27733	39000	30622	41889
.5	38305	41213	28056	39468	30964	42375
79	38768	41694	28381	39939	31307	42865
.5	39235	42179	28708	40413	31653	43357
80	39704	42667	29037	40889	32000	43852
81	40650	43650	29700	41850	32700	44850
82	41607	44644	30370	42822	33407	45859
83	42576	45650	31048	43806	34122	46880
84	43555	46667	31733	44800	34844	47911
85	44546	47694	32426	45806	35574	48954
86	45548	48733	33126	46822	36311	50008
87	46561	49783	33833	47850	37056	51072
88	47585	50844	34548	48889	37807	52148
89	48620	51917	35270	49939	38567	53235
90	49667	53000	36000	51000	39333	54333
91	50724	54094	36737	52072	40107	55443
92	51793	55200	37481	53156	40889	56563
93	52872	56317	38233	54250	41678	57694
94	53963	57444	38993	55356	42474	58837
95	55065	58583	39759	56472	43278	59990
96	56178	59733	40533	57600	44089	61155
97	57302	60894	41315	58739	44907	62331
98	58437	62067	42104	59889	45733	63518
99	59583	63250	42900	61050	46567	64716
100	60741	64444	43704	62222	47407	65926

The invention of the compound microscope has been credited to Zachias Janson and his son, spectacle makers at Middleburg A. D. 1590.

TABLE 8, of Cubic Yards in a 100-foot station of level cutting or filling, to be added to, or subtracted from, the quantities in the preceding seven tables, in case the excavations or embankments should be increased or diminished 2 feet in width. Cubic yards in a length of 100 feet; breadth 2 feet; and of different depths.

Height or Depth in feet.	Cubic Yards.	Height or Depth in feet.	Cubic Yards.	Height or Depth in feet.	Cubic Yards.	Height or Depth in feet.	Cubic Yards.	Height or Depth in feet.	Cubic Yards.
.5	3.70	.5	152	.5	300	.5	448	.5	596
1	7.41	21	156	41	304	61	452	81	600
.5	11.1	.5	159	.5	307	.5	456	.5	604
2	14.8	22	163	42	311	62	459	82	607
.5	18.5	.5	167	.5	315	.5	463	.5	611
3	22.2	23	170	43	319	63	467	83	615
.5	25.9	.5	174	.5	322	.5	470	.5	619
4	29.6	24	178	44	326	64	474	84	622
.5	33.3	.5	181	.5	330	.5	478	.5	626
5	37.0	25	185	45	333	65	481	85	630
.5	40.7	.5	189	.5	337	.5	485	.5	633
6	44.4	26	193	46	341	66	489	86	637
.5	48.1	.5	196	.5	344	.5	493	.5	641
7	51.9	27	200	47	348	67	496	87	644
.5	55.6	.5	204	.5	352	.5	500	.5	648
8	59.3	28	207	48	356	68	504	88	652
.5	63.0	.5	211	.5	359	.5	507	.5	656
9	66.7	29	215	49	363	69	511	89	659
.5	70.4	.5	219	.5	366	.5	515	.5	663
10	74.1	30	222	50	370	70	519	90	667
.5	77.8	.5	226	.5	374	.5	523	.5	670
11	81.5	31	230	51	378	71	526	91	674
.5	85.2	.5	233	.5	381	.5	530	.5	678
12	88.9	32	237	52	385	72	533	92	681
.5	92.6	.5	241	.5	389	.5	537	.5	685
13	96.3	33	244	53	393	73	541	93	689
.5	100	.5	248	.5	396	.5	544	.5	693
14	104	34	252	54	400	74	548	94	696
.5	107	.5	256	.5	404	.5	552	.5	700
15	111	35	259	55	407	75	556	95	704
.5	115	.5	263	.5	411	.5	559	.5	707
16	119	36	267	56	415	76	563	96	711
.5	122	.5	270	.5	419	.5	567	.5	715
17	126	37	274	57	422	77	570	97	719
.5	130	.5	278	.5	426	.5	574	.5	722
18	133	38	281	58	430	78	578	98	726
.5	137	.5	285	.5	433	.5	581	.5	730
19	141	39	289	59	437	79	595	99	733
.5	144	.5	293	.5	441	.5	589	.5	737
20	148	40	296	60	444	80	593	100	741

When a boiler is cold and filled with water, it will be found that, after the fire is lighted and steam is raised to the regular pressure, the gauge-cocks and water-glass show a higher water level than before the fires were started, which is owing to the expansion of the water by heat. If now the throttle be opened and the engine started, the water will rise still higher in many boilers, showing a *false water-line*—for the water will drop to its proper level upon stopping the engine. This is owing to the violent ebullition going on in the boiler to supply the steam required, and which is being constantly drawn off—and it is more marked when the steam room is small and the pressure high.

RISE PER MILE OF VARIOUS GRADES.

Grade per 100 ft.	Rise per Mile.	Grade per 100 ft.	Rise per Mile.	Grade per 100 ft.	Rise per Mile.	Grade per 100 ft.	Rise per Mile.
.01	.528	.61	32.208	1.21	63.888	1.81	95.568
.02	1.056	.62	32.736	1.22	64.416	1.82	96.096
.03	1.584	.63	33.264	1.23	64.944	1.83	96.624
.04	2.112	.64	33.792	1.24	65.472	1.84	97.152
.05	2.640	.65	34.320	1.25	66.000	1.85	97.680
.06	3.168	.66	34.848	1.26	66.528	1.86	98.208
.07	3.696	.67	35.376	1.27	67.056	1.87	98.736
.08	4.224	.68	35.904	1.28	67.584	1.88	99.264
.09	4.752	.69	36.432	1.29	68.112	1.89	99.792
.10	5.280	.70	36.960	1.30	68.640	1.90	100.320
.11	5.808	.71	37.488	1.31	69.168	1.91	100.848
.12	6.336	.72	38.016	1.32	69.696	1.92	101.376
.13	6 864	.73	38.544	1.33	70.224	1.93	101.904
.14	7.392	.74	39.072	1.34	70 752	1.94	102.432
.15	7.920	.75	39.600	1.35	71.280	1.95	102.960
.16	8.448	.76	40.128	1.36	71.808	1.96	103.488
.17	8.976	.77	40.656	1.37	72.336	1.97	104.016
.18	9.504	.78	41.184	1.38	72.864	1.98	104 544
.19	10.032	.79	41.712	1.39	73.392	1.99	105.072
.20	10.560	.80	42.240	1.40	73.920	2.00	105 600
.21	11.088	.81	42.768	1.41	74.448	2.10	110.880
.22	11.616	.82	43.296	1.42	74.976	2.20	116.160
.23	12.144	.83	43.824	1.43	75.504	2.30	121.440
.24	12.672	.84	44.352	1.44	76.032	2.40	126 720
.25	13.200	.85	44.880	1.45	76.560	2.50	132.000
.26	13.728	.86	45.408	1.46	77.088	2.60	137.280
.27	14.256	.87	45.936	1.47	77.616	2.70	142.560
.28	14.784	.88	46.464	1.48	78.144	2.80	147.840
.29	15.312	.89	46.992	1.49	78.672	2.90	153.120
.30	15.840	.90	47.520	1.50	79.200	3.00	158.400
.31	16.368	.91	48.048	1.51	79.728	3.10	163.680
.32	16.896	.92	48.576	1.52	80.256	3.20	168.960
.33	17.424	.93	49.104	1.53	80.784	3.30	174.320
.34	17.952	.94	49.632	1.54	81.312	3.40	179.520
.35	18.480	.95	50.160	1.55	81.840	3.50	184.800
.36	19.008	.96	50.688	1.56	82.368	3 60	190.080
.37	19.536	.97	51.216	1.57	82.896	3.70	195.360
.38	20.064	.98	51.744	1.58	83.424	3.80	200.640
.39	20.592	.99	52.272	1.59	83.952	3.90	205.920
.40	21.120	1.00	52 800	1.60	84.480	4.00	211.200
.41	21.648	1.01	53.328	1.61	85.008	4.10	216.480
.42	22.176	1.02	53.856	1.62	85.536	4.20	221.760
.43	22.704	1.03	54.384	1.63	86.064	4.30	227.040
.44	23.232	1.04	54.912	1.64	86.592	4.40	232.320
.45	23.760	1.05	55.440	1.65	87.120	4.50	237.600
.46	24.288	1.06	55.968	1.66	87.648	4.60	242.880
.47	24.816	1.07	56.496	1.67	88.176	4.70	248.160
.48	25.344	1.08	57.024	1.68	88.704	4.80	253.440
.49	25.872	1.09	57.552	1.69	89.232	4.90	258.720
.50	26.400	1.10	58.080	1.70	89.760	5.00	264.000
.51	26.928	1.11	58.608	1.71	90.288	5.10	269.280
.52	27.456	1.12	59.136	1.72	90.816	5.20	274.560
.53	27.984	1.13	59.664	1.73	91.872	5.30	285.120
.54	28.512	1.14	60.192	1.74	91.872	5.40	285.120
.55	29.040	1.15	60.720	1.75	92.400	5.50	290.400
.56	29.568	1.16	61.248	1.76	92.928	5.60	295.680
.57	30.096	1.17	61.776	1.77	93.456	5.70	300.960
.58	30.624	1.18	62.304	1.78	93.984	5.80	306.240
.59	31.152	1.19	62.832	1.79	94.512	5.90	311.520
.60	31.680	1.20	63.360	1.80	95.040	6.00	316.800

Illuminating Gas.

Coal gas, enriched for illuminating purposes, has about the following composition:

	PER CENT.
Hydrogen	45.00
Light Carburetted Hydrogen	40.00
Carbonic Oxide	6.50
Heavy Hydro-Carbon	5.50
Water Vapor	1.50
Carbonic Acid, Nitrogen and other Deleterious or Negative Matter	1.50
	100.00

Table showing proportionate size and length of service pipes to give perfect flow of gas:

Size of Pipe. Inches.	Greatest Length Allowed. Feet.	Greatest Number of Burners.	Size of Pipe. Inches.	Greatest Length Allowed. Feet.	Greatest Number of Burners.
¼	6	1	1	70	35
⅜	20	3	1¼	100	60
½	30	6	1½	150	100
⅝	40	12	2	200	200
¾	50	20			

By experiment, 30,000 cubic feet of gas, specific gravity of .42, were discharged in an hour through a main 6 inches in diameter and 22.5 feet in length; and 852 cubic feet, specific gravity .398, were discharged, under a head of 3 inches of water, through a main 4 inches in diameter and 6 miles in length.

The loss of volume of discharge by friction, in a pipe 6 inches in diameter and 1 mile in length, is estimated at 95 per cent.

Specific Gravity.

The specific gravity of a body is the measure of its weight or density. The best mode of expressing it is by comparing it with the weight of water as a standard. A cubic foot of distilled water weighs at a temperature of 60° Fahrenheit 1,000 ounces. A cubic foot of ice weighs 925 ounces, and of lard 945 ounces. If, then, in the comparison we call the gravity of water 1, the gravity of ice would be expressed by the decimal .925, and of lard by .945. Beaume's hydrometer calls the gravity of water 10° at a temperature of 60°; the numbers above that in the gradation being the measure of lighter liquids, and those below the measure of heavier. It is an arbitrary standard, and should be discarded for one more sensible. To measure the gravity when the temperature is above 60° for every ten degrees of difference, subtract one degree from the readings of Beaume's hydrometer and add .005 to the readings of the water standard. When below 60°, subtract in place of adding and vice versa.

Gauging by Weight.

To gauge by weight, knowing the gravity, use the following rule:

Divide the net weight of the oil by the weight of one gallon as found in the following table opposite the proper specific gravity. The weights should be expressed in the same denominations and due regard paid to the decimals.

To find the specific gravity of a liquid without an hydrometer:

Divide the weight of a gallon, expressed in ounces and decimals of an ounce, by 133.68, the quotient will be the gravity by the "water standard," and by reference to the table below the corresponding gravity by Beaume's hydrometer can be found.

Comparison of Beaume's Scale with the Water Standard, and the Actual Weight of One Gallon for Each Degree, in Ounces and Decimals.

BEAUME.	WATER STANDARD.	WEIGHT ONE GALLON IN OZ.	BEAUME.	WATER STANDARD.	WEIGHT ONE GALLON IN OZ.
10°	1.000	133.68	36°	.849	113.49
11	.993	132.74	37	.844	112.83
12	.986	131.81	38	.839	112.16
13	.980	131.01	39	.834	111.49
14	.973	130.07	40	.830	110.95
15	.967	129.27	41	.825	110.29
16	.960	128.33	42	.820	109.62
17	.954	127.53	43	.816	109.08
18	.948	126.72	44	.811	108.41
19	.942	125.92	45	.807	107.88
20	.936	125.12	46	.802	107.21
21	.930	124.32	47	.798	106.68
22	.924	123.52	48	.794	106.14
23	.918	122.69	49	.789	105.47
24	.913	122.05	50	.785	104.94
25	.907	121.25	51	.781	104.40
26	.901	120.65	52	.777	103.87
27	.896	119.78	53	.773	103.34
28	.890	118.98	54	.768	102.67
29	.885	118.31	55	.764	102.13
30	.880	117.64	56	.760	101.60
31	.874	116.84	57	.757	101.20
32	.869	116.17	58	.753	100.66
33	.864	115.50	59	.749	100.13
34	.859	114.83	60	.745	99.59
35	.854	114.16	61	.741	99.06

NOTE.—In one gallon there are 231 cubic inches. In a barrel of forty-five gallons there are 6 cubic feet (and an excess of only 27 cubic inches).

The Imperial standard gallon contains 10 lbs. of distilled water, and measures 277.27 cubic inches.

Problems in Specific Gravity.

I. *To Find the Magnitude of a Body from its Weight.*

Find the weight of the body in ounces, and divide by the specific gravity, the quotient will be the number of cubic feet in the contents.

II. *To Find the Weight of a Body from its Magnitude.*

Find the number of cubic feet in the body, and multiply by the specific gravity, the product will be the number of ounces in the weight.

III. *To Find the Specific Gravity of a Body.*

CASE 1.—When the body is heavier than water, weigh the body both in air and in water, annex three ciphers to the weight in air, and divide by the difference of the weights, the quotient will be the specific gravity.

CASE 2.—When the body is lighter than water: Having weighed the light body in air, and a body heavier than water both in air and in water, fasten them together by a slender tie, then weigh the compound in water and subtract its weight from the weight of the heavy body in water; to the remainder add the weight of the light body in air, and by the sum divide one thousand times the weight of the light body in air, the quotient will be the specific gravity of the light body.

IV. *To Find the Quantity of Each Ingredient in a Mixture of Two Substances.*

1. Multiply the specific gravity of the mass by the difference between the specific gravities of the two ingredients for a *first* product.

2. Multiply the specific gravity of that ingredient whose quantity is desired, by the difference between the specific gravities of the mass and that of the other ingredients for a *second* product.

3. Multiply the weight of the whole mass by the *second* product, and divide by the *first* product, the quotient will be the weight of the ingredient sought.

Specific Gravity.

	SPECIFIC GRAVITY.	WEIGHT PER CU. FT.
Water at 62 deg. Fahr.	1.000	62.321
METALS.		
Platinum	21.522	1342.000
Gold	19.425	1205.000
Mercury	13.596	848.750
Lead	11.418	712.000
Silver	10.505	655.000
Bismuth	9.900	616.978
Copper, hammered	8.917	556.000
" sheet	8.805	549.000
" cast	8.600	537.000
Gun Metal, 84 copper, 16 tin	8.560	533.468
" " 83 " 17 "	8.460	527.235
Nickel, hammered	8.670	540.223
" cast	8.280	516.018
Bearing Metal, 79 copper, 21 tin	8.730	544.062
Brass, wire	8.540	533.000
" cast, 75 copper, 25 zinc	8.450	526.612
" " 66 " 34 "	8.300	517.264
" " 60 " 40 "	8.200	511.032
Bronze	8.400	524.000
Steel	7.852	490.000
Iron, wrought, average	7.698	480.000
" cast	7.110	444.000

	SPECIFIC GRAVITY.	WEIGHT PER CU. FT.
Zinc, sheet	7.200	449.000
" cast	6.860	424.000
Tin	7.409	462.000
Antimony	6.710	418.174
Iron Ores	5.251	327.247
	3.829	238.627
Aluminum, cast	2.560	159.542
MINERALS, MASONRY, ETC.		
Manganese	8.00	498.568
Basalt	3.00	187.000
Glass, flint	3.00	187.000
" plate	2.70	169.000
Marble	2.84	176.991
	2.52	157.019
Granite	3.06	190.702
	2.36	147.077
Soapstone	2.73	140.000
Flint	2.63	164.200
Feldspar	2.60	162.300
Limestone	2.80	175.000
	2.70	169.000
Slate	2.90	181.000
	2.80	175 000
Trap Rock	2.72	170.000
Quartz	1.26	78.524
	2.65	165.000
Shale	2.60	162.000
Sandstone	2.30	144.000
Gypsum	2.30	144.000
Masonry	2.30	144.000
	1.85	116.000
Graphite	2.20	137.106
Brick	2.167	135.000
	2.000	125.000
Chalk	2.78	174.000
	1.87	117.000
Sulphur	2.00	125.000
Clay	1.92	120.000
Sand, damp	1.90	118.000
" dry	1.42	88.600
Gravel, damp	1.90	118.000
" dry	1.42	88.600
Marl	1.90	119.000
	1.60	100.000
Mud	1.63	102.000
Coal, anthracite	1.602	100.000
" bituminous	1.44	89.900
	1.24	77.400

	SPECIFIC GRAVITY.	WEIGHT PER CU. FT.
Coke, dry, loose, average	0.449	28.000
Scoria	0.830	51.726
Cement, American, loose	.....	60 000
" " well shaken	.....	70.000
" " thoroughly shaken	.....	80.000
" " struck bushel 75 lbs	.....	.....
LIQUIDS.		
Acid, sulphuric	1.840	114.670
" nitric	1.220	76.031
" acetic	1.080	67.306
Milk	1.030	64.100
Sea Water	1.026	64.050
Linseed Oil	0.940	58.680
Sperm Oil	0.923	57.620
Olive Oil	0.915	57.120
Alcohol, proof spirit	0.920	57.335
" pure	0.791	49.380
Petroleum	0.878	54 810
Turpentine, oil	0.870	54.310
Naphtha	0.848	52.940
Ether	0.716	44.700
TIMBER.		
Ash	0.753	47.0
Bamboo	0.400	25.0
Beech	0.690	43.0
Birch	0.711	44.4
Blue Gum	0.834	52.5
Boxwood	0.960	60.0
Cedar of Lebanon	0.486	30.4
Cherry, dry	0.672	42.0
Chestnut	0.535	33.4
Cork	0.250	15.6
Ebony, West India	1.193	74.5
Elm	0.544	34.0
Greenheart	1.001	62.5
Hawthorn	0.910	57.0
Hazel	0.860	54.0
Hemlock, dry	0.400	25.0
Holly	0.760	47.0
Hickory	0.850	53.0
Hornbeam	0.760	47.0
Laburnum	0.920	57.0
Lancewood	1.010	63.0
	0.675	42.0
Lignum Vitæ	1.330	83.0
	0.650	41.0

	SPECIFIC GRAVITY.	WEIGHT PER CU. FT.
Locust	0.710	44.0
Mahogany, Honduras	0.560	35.0
" Spanish	0.850	53 0
Maple	0.790	49.0
Oak, live, dry	0.950	59.3
" white, dry	0.830	51.8
Pine, " "	0.400	25.0
" yellow, "	0.550	34.3
" Southern, dry	0.720	45.0
Sycamore	0.590	37.0
Teak, India	0.880	55.0
	0.660	41 0
Water Gum	1.001	62.5
Walnut	0.610	38.0
Willow	0.400	25.0
Yew	0.800	50.0
MISCELLANEOUS.		
Ivory	1.82	114.000
India Rubber	0.93	58.000
Lard	0.95	59.300
Gutta Percha	0.98	61.100
Beeswax	0.97	60.500
Turf, dry, loose	0.401	25.000
Pitch	1.15	71.700
Fat	0 93	58.000
Tallow	0 936	58.396
GASES.		
Weight per cubic foot at 32 deg. Fahr. and under pressure of one atmosphere:		
Air	.....	0.080728
Carbonic Acid	.....	0.12344
Hydrogen	.....	0.005592
Oxygen	.....	0.089256
Nitrogen	.....	0.078596
Steam	.....	0.05022
Vapor of Ether	.....	0.2093
" " Bi-Sulphide of Carbon	.....	0.2137
Olefient Gas	.....	0.0795

To Find the Bulk of a Given Weight of Any Substance.

RULE: Multiply the weight of a cubic foot of water by the specific gravity of the substance, and divide the given weight by that product. The quotient is the required bulk in cubic feet.

EXAMPLE: What is the bulk of 20,000 ounces of lead?

$$1{,}000 \text{ ounces} \times 11.36 = 11{,}360$$

$$\frac{20{,}000}{11{,}360} = 1.76 + \text{cu. ft.} \quad \text{Ans.}$$

Steel Hawsers.

CIRCUMFERENCE.	BREAKING STRENGTH.	SIZE OF MANILLA HAWSER OF EQUAL STRENGTH.
2½ inches.	15 tons.	7 inches.
2¾ "	18 "	7½ "
3 "	22 "	8½ "
3½ "	29 "	10 "
4 "	35 "	12½ "

Effect of Heat Upon Various Bodies.

	DEGREES.		DEGREES.
Ammonia boils	140	Iron, bright red in the dark	752
Ammonia (liquid) freezes	—46	" red hot in twilight	884
Antimony melts	951	Lead melts	504
Arsenic melts	305	Mercury boils	662
Bismuth melts	476	" volatilizes	680
Blood (human) heat of	98	" freezes	—39
" " freezes	25	Naphtha boils	186
Brandy freezes	—7	Petroleum boils	306
Brass melts	1,900	Platinum melts	3,080
Cadmium melts	600	Potassium melts	135
Coal Tar boils	325	Proof spirit freezes	—7
Cold, greatest artificial	—166	Saltpetre melts	600
" " natural	—56	Sea-water freezes	28
Common Fire	790	Silver (fine) melts	1,250
Copper melts	2,548	Snow and Salt equal parts	0
Glass melts	2,377	Spirit of Turpentine freezes	14
Gold (fine) melts	2,590	Steel melts	2,500
Gutta-percha softens	145	" polished, blue	580
Heat, cherry red	1,500	" " straw color	460
" " " (Damel)	1,141	Strong Wines freeze	20
" bright red	1,860	Sulphur melts	226
" red, visible by day	1,077	" Acid (sp.grav.1.641) freezes	—45
" white	2,900	Tin melts	421
Ice melts	32	Vinous fermentation	60 to 77
Iron (cast) melts	3,479	Water in *vacuo* boils	98
Iron (wrought) melts	3,980	Zinc melts	740

The sign — before the figures indicates that many degrees below zero or 0.

Boiling Points of Various Fluids.

	DEGREES.		DEGREES.
Ether	96 to 104	Petroleum	316
Alcohol	173.5	Oil of Turpentine	304
Nitric Acid	210	Phosphorus	554
Sea Salt	224.3	Sulphur	570
Common Salt	226	Linseed Oil	640
Sulphuric Acid	600	Sweet Oil	412
Sea Water	213.2	Water	212

Hot Water Heating Apparatus.

One square foot of boiler surface *exposed to the direct action of the fire*, or three square feet of flue, will be sufficient in a hot water apparatus to supply the necessary heat to about 50 superficial feet of 4 inch cast iron pipe. Water in pipes of 200 deg. Fahr.

Every square foot of glass cools about 1¼ cubic feet of air as many degrees per minute as there is difference between the inside and outside temperature.

If the difference between the inside and outside temperature should be 50 degrees, then 1¼ cubic feet of air will be cooled 50 degrees by each square foot of glass, or as much heat as is equal to this will be given off, by each square foot of glass. This applies also to iron.

The expansion of water between the temperatures of 40 and 212 degrees is equal to 1 gallon in every 24.

A pipe 1 inch diameter will cool four times as fast as a pipe 4 inches diameter, a pipe 2 inches twice as fast, and a pipe 3 inches diameter one and one-third times as fast.

TABLE showing the amount of pipe, four inches diameter, that will heat a house having a glass exposure of 800 square feet any required number of degrees, the temperature of the pipes being 200 degrees.

TEMPERATURE OF EXTERNAL AIR.	TEMP. AT WHICH THE HOUSE IS REQUIRED TO BE KEPT.									
	40	45	50	55	60	65	70	75	80	
20	211	236	263	291	322	354	389	428	470	Linear Feet.
18	204	229	255	283	314	346	380	419	460	
16	197	222	248	275	306	338	372	410	450	
14	190	215	240	268	298	330	363	401	441	
12	183	207	233	260	290	321	355	392	431	
10	176	200	225	252	281	313	346	383	422	
8	169	194	217	245	273	305	337	374	413	
6	162	186	210	237	265	296	329	365	403	
4	155	178	203	229	257	288	320	356	394	
2 Below	148	171	195	221	249	280	312	347	385	
Zero	141	164	187	214	241	271	303	338	375	
2 Above	134	156	179	206	233	262	294	329	366	
4	127	150	172	198	225	254	286	320	356	
6	120	141	165	190	217	246	277	311	347	
8	113	134	157	182	209	238	268	302	338	
10	105	126	150	174	200	229	259	292	328	
12	98	119	142	166	192	220	251	283	318	
14	91	112	135	159	184	212	242	274	309	
16	84	105	127	151	176	204	233	265	300	
18	77	98	120	143	168	195	225	256	290	
20	70	91	112	135	160	187	216	247	281	
22	63	83	105	128	152	179	207	238	271	
24	56	76	97	120	144	170	199	229	262	
26	49	69	90	112	136	162	190	220	253	
28	42	61	82	104	128	154	181	211	243	
30	35	54	75	97	120	145	173	202	234	
32	28	47	67	89	112	137	164	193	225	

MONEY VALUE OF FEED-WATER HEATER.

In Purifying and Heating the Feed Water by Exhaust Steam.

FINAL TEMPERATURE.	INITIAL TEMPERATURE OF WATER. STEAM 60 LBS.											
	32°	40°	50°	60°	70°	80°	90°	100°	120°	140°	160°	180°
60°	2.39	1.71	0.86									
80	4.09	3.43	2.59	1.74	0.88							
100	5.79	5.14	4.32	3.49	2.64	1.77	0.90					
120	7.50	6.85	6.05	5.23	4.40	3.55	2.68	1.80				
140	9.20	8.57	7.77	6.97	6.15	5.32	4.47	3.61	1.84			
160	10.90	10.28	9.50	8.72	7.91	7.09	6.26	5.42	3.67	1.87		
180	12.60	12.00	11.23	10.46	9.68	8.87	8.06	7.23	5.52	3.75	1.91	
200	14.30	13.71	13.00	12.20	11.43	10.65	9.85	9.03	7.36	5 62	3.82	1.96
220	16.00	15.42	14.70	14.00	13.19	12.33	11.64	10.84	9.20	7.50	5.73	3.93
240	17.79	17.13	16.42	15.69	14.96	14.20	13.43	12.65	11.05	9.37	7.64	5.90
260	19.40	18.85	18.15	17.44	16.71	15.97	15.22	14.45	11.88	11.24	9.56	7.86

The foregoing table shows the saving in fuel by heating feed-water by exhaust steam. To this must be added the saving obtained by purifying the water. This saving is found in the economy of fuel, due to clean boilers. and in the reduced cost of repairs and stoppages caused thereby; also in prolonging the life of the boiler. The saving from all these sources may amount to several times the cost of the boilers during their life. The difference in fuel required between a clean boiler and one having a scale in it of only one-sixteenth of an inch in thickness is placed by good authorities at 13 per cent in favor of the clean boiler. But for comparison we will call it 10 per cent. A 100-horse power boiler will require say four pounds of coal per horse power, and for 300 days of ten hours 1,200,000 pounds, ten per cent of which is 120 000 pounds; at one-quarter cent per pound is $300 for the 300 days and $3,000 in ten years—enough to buy 200-horse power of boilers. To this add the saving of repairs and lengthening the life of the boilers. Altogether the saving is almost beyond belief. These statements are sustained by both tests and experience, and by the best authority.

To Find the Force of the Blow of a Steam Hammer.

RULE: Add together the weight of ram and piston in pounds. Add together the stroke in feet, and depth of penetration of blows in feet. Multiply those two sums together and divide the product by the depth of penetration of blows in feet. The quotient will be the force of the blow in pounds.

Table Showing the Relation of Height to Weight in Man.

Height.		Weight.
5 feet	from	102 to 150 lbs.
5 " 1 inch	"	106 to 155 "
5 " 2 "	"	109 to 160 "
5 " 3 "	"	112 to 165 "
5 " 4 "	"	116 to 170 "
5 " 5 "	"	119 to 175 "
5 " 6 "	"	122 to 180 "
5 " 7 "	"	127 to 188 "
5 " 8 "	"	133 to 195 "
5 " 9 "	"	138 to 203 "
5 "10 "	"	143 to 210 "
5 "11 "	"	148 to 218 "
6 "	"	153 to 225 "

Table of Latent Heat, etc., of Vapors.

NAME.	UNITS OF LATENT HEAT OF VAPOR.	SPEC. GRAV. OF VAPOR. (AIR = 1)	SPEC. GRAV. OF LIQUID. (WATER = 1)	BOILING POINT OF LIQUID.
Water	962	0.45	1.00	212° Fah.
Alcohol	385	1.25	0.80	176° "
Ether	162	2.26	0.71	95° "
Oil of Turpentine	133	3.21	0.99	311° "
Bisulphide of Carbon	210	2.60	1.27	112° "
Ammonia	900	0.59	0.76	— 30° "
Carbonic Acid	300	1.53	0.80	—112° "
Chymogene	170	4 00	0.60	+ 28° "

Heating By Steam.

In heating buildings by steam, the amount of boiler and heating pipe depends largely on the kind of building and its location.

Wooden buildings require more than stone, and stone more than brick. Iron fronts require still more, and glass in windows demands twenty times as much heat as the same surface in brick walls. Also, if the heating be done by indirect radiation, from 50 to 100 per cent more heating pipe will be required than when direct radiation is used. To find the number of square feet of radiating surface necessary to heat a room, hall or building:

RULE: Add together the square feet of glass in the windows, the number of cubic feet of air required to be changed per minute, and one-twentieth the surface of external wall and roof; multiply this sum by the difference between the required temperature of the room and that of the external air at its lowest point, and divide the product by the difference in temperature between the steam in the pipe and the required temperature of the room. The quotient will be the required radiating surface in square feet.

In indirect heating—that is, where a current of air is driven or drawn through a box containing coiled pipe—the efficiency of the radiating surface will increase, and the temperature of the air will diminish, when the quantity of the air caused to pass through the coil increases. Thus one square foot of radiating surface, with steam at 212 degrees, has been found to heat 100 cubic feet of air per hour from zero to 150 degrees, or 300 cubic feet from zero to 100 degrees in the same time.

Small pipes are more effective than large.

When the diameter is doubled 20 per cent additional surface should be allowed, and for three times the diameter, 30 per cent additional is required. Where the condensed water is returned to the boiler, or where low pressure of steam is used, the *diameter* of *mains* leading from the boiler to the radiating surface should be equal in inches to *one-tenth the square root of the radiating surface, mains included*, in square feet.

Thus a one inch pipe will supply 100 square feet of surface, itself included.

Return pipes should be at least ¾ inch in diameter, and never less than ½ diameter of main—longer returns requiring larger pipe.

The amount of air required for ventilation is from 4 to 16 cubic feet per minute for each person, the larger amount being for prisons and hospitals.

From ½ to 1 cubic foot per minute should be allowed for each lamp or gas burner used.

One square foot of boiler heating surface will supply from 7 to 10 square feet of radiating surface, depending upon the size of boiler and the efficiency of its surface, as well as that of the radiating surface. Each horse power of boiler will supply from 240 to 360 feet of one inch steam pipe, or 80 to 120 square feet of radiating surface.

For rough calculations, under ordinary conditions one horse power will heat, approximately, in

Brick dwellings, in blocks.....	15,000	to	20,000 cubic feet
" stores "	10,000	"	15,000 "
" dwellings, exposed all round.	10,000	"	15,000 "
" mills, shops, factories, etc.....	7,000	"	10,000 "
Wooden dwellings, exposed.....	7,000	"	10,000 "
Foundries and wooden shops.....	6,000	"	10,000 "
Exhibition buildings, largely glass.	4,000	"	15,000 "

In heating buildings care should be taken to supply the necessary moisture to keep the air from becoming dry and uncomfortable. The capacity of air for moisture rises rapidly as it is heated, it being four times as great at 72 degrees as at 32 degrees. For comfort air should be kept at about "50 per cent saturated." This would require one pound of vapor to be added to each 2,500 cubic feet heated from 32 degrees to 70 degrees.

In steam heating the best results are attained by using indirect radiation to supply the necessary ventilation, and direct radiation for the rest of the heat.

Boiling by Steam and the Necessity of Steam Traps.

To boil by steam economically, it is absolutely necessary to have all the steam which is used for boiling condensed inside of the heating coil, and nothing but condensed water should be allowed to escape from the tail pipes of the coils, and this should be discharged as soon or as fast as it is formed. If 1 pound of steam of 80 pounds pressure passes through a heating coil without condensing, and escapes with a pressure of 1 atmosphere, it can raise 104 pounds of water 1 degree; but the same 1 pound of steam, if all condensed inside of the coil, can raise 1,071 pounds of water 1 degree, which is over nine times as much. This 1 pound of steam condensed gives 1 pound of water of 212 degrees; if this remains in the heating coil it will raise 1 pound of water of 90 degrees to 151 degrees, and lowering its own temperature to 151 degrees, which is too low to boil in the open atmosphere. If this water is not or only partly discharged it will cover the inside surface of the coil, and leave no space for fresh steam to enter to take the place of the steam already condensed, whereby the heating process will be slower and slower, and finally cease.

When boilers are used for heating water in tanks, either by coils or by the steam entering the water, care should be taken that the outlet for steam from the boiler is not too large.

Steam flowing into a vacuum at an expansive pressure equal to the atmosphere, travels at the rate of 1,550 feet per second, and flowing into the air at the rate of 650 feet per second, for a pressure of 15 pounds per square inch.

By this it will be seen that a small pipe will discharge a very large quantity of steam.

A two-inch pipe will discharge over 100-horse power of steam into a coil surrounded by water sufficient to produce a vacuum, and about the same when the steam is discharged into water. In such cases there should be no more than one square inch of steam opening from the boiler for every 50-horse power of its capacity, and at that rate for all sizes of boilers.

When steam is used for heating water in tanks by discharging it into the water, there should be about 5 pounds of water brought to a temperature of 212 degrees for every pound of water evaporated in the boiler.

Where coils are used for heating water, they should be located above the boiler, and the condensed water returned to the boiler, by its own gravity, or a pump may be used to return the water, thereby saving as much fuel as has been used to bring this water to the temperature at which it leaves the coils.

Buffalo Hot Blast Heater, with Engine Attached.

Cubic Feet of Air Delivered per Minute at One Ounce Pressure.	Horse Power Required to Drive Fan.	Number of Lineal Feet of One Inch Pipe in Heater.	Horse Power of Boiler Required to Drive Fan and Supply Necessary Steam to Heater Coil.
8,740	3.1	1,000	12
11,000	4.	1,200	15
15,280	4.5	1,600	20
19,900	6.	2,000	25
25,900	7.2	2,500	30
32,500	9.1	3,000	35
39,300	11.	3,500	42
49,161	13.5	4,000	48
57,720	15.	4,500	54
81,120	20.	5,000	62
101,250	22.	6,000	72

Size and capacity of blowers and heaters for hot blast apparatus.

BLOWER.						HEATER.	
Perpend'r Diameter of Housing.	Outlet Width and Height in Inches.		Diameter and Face of Pulley on Blower.	Ordinary Speed.	H. P. to Drive Blower.	Capacity in Cubic Feet Per Minute 1 Ounce Pressure.	No. ft. of 1 in. Pipe for Warming Buildings.	No. ft. of 1 in. Pipe for Dry Houses.
40 in.	15	ROUND.	10x 4½	825	1.5	6,350	300	450
50 "	19		12x 5½	650	2.3	10,200	500	750
60 "	22½		14x 6½	550	3.	14,300	600	900
70 "	26		16x 7½	475	4.6	19,100	900	1,350
80 "	24 x 28		18x 7½	400	6.	24,150	1,200	1,800
90 "	28 x 30		20x 8½	350	7.6	30,200	1,500	2,250
100 "	32 x 32		20x 8½	325	9.4	36,800	1,800	2,700
120 "	42 x 42		24x10½	275	13.5	63,400	2,500	3,750
140 "	48 x 48		28x12½	230	18.4	82,800	3,500	5.250
160 "	48 x 54		32x12½	200	24.	93,150	4,600	6,900

A cubic foot of air at 32° Fah. will carry off two grains of water, while at 160° it will carry off ninety grains.

Sturtevant's Patent Steam Hot Blast Apparatus.

It is the ordinary practice among engineers to base the calculation of heating capacity upon the number of pounds or cubic feet of air which may be heated by the condensation of one pound of steam. The specific heat of air at constant pressure is about .25, compared with water as a standard. That is to say, the heat absorbing power of air is one-fourth that of water, and the amount of heat required to heat one pound of water through 1° F., will heat four pounds of air through the same distance. In addition, one pound of water, evaporated into steam of 70 lbs. pressure, has a latent heat of 891 heat units. Or, as a heat unit is capable of raising the temperature of one pound of water through 1° F., the heat present in one pound of steam of 70 lbs. pressure, will heat 891 lbs. of water, or $4 \times 891 = 3500$ (nearly) lbs of air through 1° F. One cubic foot of air at 70° F. weighs about .075 lb., and 3500 lbs. will occupy $\frac{3500}{.075}$ =about 46,600 cubic feet; i. e., the volume of air which may be heated one degree by the condensation of one pound of steam of above pressure. Upon this basis the exact amount of steam required to raise the temperature of any given volume of air through any number of degrees can be readily calculated. Suppose it is desired to heat 500,000 cubic feet in an hour from 50° to 170°. As one pound of steam is required to heat 46,600 cubic feet one degree, $\frac{500000}{46600}$ =about 10¾ lbs. will be required to heat 500,000 cubic feet one degree, or $120° \times 10\frac{3}{4} = 1290$ lbs per hour to heat this volume through 120°, which at 30 lbs. per H. P. equals 43 H. P. It is thus evident that, with the same volume of air, the amount of steam condensed varies directly with the rise in temperature of the air entering the heater. Hence may be seen the great advantage of returning the air to the heater, thereby reducing the amount of steam condensed. In the above case if the air had been returned to the heater at a temperature of 70° instead of 50°, the rise in temperature would have been only 100°, and the H. P. required would be reduced to $\frac{100}{120}$ of 43 H. P., or 35.8 H. P. Or when returned at 90° the rise will be 80°, and only $\frac{80}{120}$ of 43 H. P., or 28.7 H. P. will be required, resulting in a saving of 33 per cent of the steam used in the first instance, to do the same amount of heating.

Hydraulic Ram.

The length of supply pipe should not be less than ¾ of the height to which the water is to be raised.

One-seventh of the water may be raised to about 4 times the head of supply, or $\frac{1}{14}$ eight times, or $\frac{1}{28}$ sixteen times, etc.

To Find the Quantity of Water Used in Cube Feet Per Minute.

RULE: Multiply the constant number 881 by the effective horse-power and divide the product by head of water in feet.

To Find the Effective Horse-Power.

RULE: Multiply the constant number .00113 by the quantity of water used in cube feet per minute, and this product by the head of water in feet, the result will be the effective horse-power.

The diameter of supply pipe should equal the constant number 1.45 multiplied by the square root of the quantity of water used in cube feet per minute.

The diameter of delivery pipe should equal the constant number .75 multiplied by the square root of the quantity of water used in cube feet per minute.

The contents of air vessel should equal the contents of delivery pipe. Hydraulic rams can be used with delivery pipes 800 to 1,000 feet in length, and drive pipes from 25 to 50 feet long.

Flow of Water Through Nozzles.

HEAD.	DIAMETER OF NOZZLES.						
	2-INCH.	3-INCH.	4-INCH.	5-INCH.	6-INCH.	7-INCH.	8-INCH.
Feet.	Cu. Feet.	Cu. Feet.	Cu. Feet.	Cu. Feet.	Cu. Feet.	Cu. Feet.	Cu. Feet
50	1.15	2.59	4.60	7.19	10.36	14.10	18.40
100	1.63	3.66	6.52	10.17	14.64	19.94	26.08
150	2.00	4.48	8.00	12.46	17.92	24.42	32.00
200	2.30	5.10	9.20	14.34	20.64	28.20	36.80
250	2.58	5.80	10.32	16.09	23.20	31.54	41.28
300	2.82	6.30	11.28	17.62	25.44	34.54	45.12
350	3.05	6.84	12.20	19.04	27.30	37.32	48.80
400	3.26	7.32	13.04	20.35	29.28	39.89	52.10
450	3.46	7.76	13.84	21.59	31.04	42.31	55.36
500	3.64	8.20	14.56	22.75	32.80	44.00	58.24

Application of above Table.

Let the quantity of water which a 6-inch nozzle, under a 200-foot head, will discharge per second be required.

In "head" column of table, find 200 feet, opposite which in "diameters of nozzles in inches, 6" column, will be found 20.64 cubic feet, the quantity sought. The entire fall between the inlet end of a pipe 36 inches diameter, 4 miles long, and the outlet end, at a hydraulic mine, being 284 feet, and the quantity of water being 1,500 statutory miner's inches, let it be required to find the efficient head and the diameter of the requisite nozzle. Divide the given number statutory miner's inches by 50. Thus $1,500 \div 50 = 30$ cubic feet.

In "diameters, 36 inches" column; table of "Flow of water per second in clean iron pipes," find 30 cubic feet, or nearest approximate to it, 30.29 cu. ft., opposite which, in "fall per mile" column, will be found 8.45 feet, the loss of head per mile. Then, $8.45 \times 4 = 33.8$ feet loss for the 4 miles' length, $284 - 33.8 = 250.2$ feet efficient head sought. In "head" column above table, find 250, opposite which the nearest approximate number to 30 (equivalent to 1,500 miner's inches) is 31.54 cubic feet in "diameter of nozzles in inches, 7" column. Then, 7 inches is the diameter of the nozzle sought.

Water Pipes.

The quantity of water which will flow through a pipe depends upon its head, and upon the diameter and length of the pipe. The head is the vertical distance between the level of the water's surface in the reservoir and the center of the outlet end of the pipe. A portion of this head is expended in overcoming the resistances of entry and in generating the velocity of discharge; the remainder of the head is expended in overcoming the resistances within the pipe. This remaining head is termed the fall, dividing which by the length of the pipe in miles gives the fall per mile.

In pipes several miles long the entry and velocity head can be omitted, in practice, without material error.

A water pipe, from its inlet end, should be funnel form, or conic, for a distance equal to three times its diameter.

The diameter of its inlet end should be fully 20 per cent larger than the diameter of the main portion of the pipe. The "bell mouth" is recommended as the best form for the inlet end.

The following table has been computed for the carrying capacities of pipes, whose lengths are not less than a thousand times their respective diameters.

The computations have been made for those sizes most in use. Those of 9, 11, 15 and 22 inches diameters are termed at the pipe manufactories "running sizes."

Flow of Water Per Second in Clean Iron Pipes.

FALL PER MILE.	6-INCH DIAMETER	9-INCH DIAM.	11-INCH DIAM.	15-INCH DIAMETER	22-INCH DIAMETER	30 INCH DIAMETER	36-INCH DIAMETER	44 INCH DIAMETER
Feet.	Cu. Ft.	Cu. Ft	Cu. Ft	Cu. Ft.	Cu. Ft.	Cu. Ft.	Cu. Ft.	Cu. Ft.
1.58						7.78	12.70	22.22
2.11						8.99	14.56	25.55
2.64						10.24	16.35	28.87
3.17					4.61	10.97	18.02	31.46
3.70					5.25	11.90	19.76	34.47
4.22				2.05	5.62	12.84	20.85	37.05
4.75				2.19	6.01	13.48	22.30	39.01
5.28				2.30	6.32	14.21	23.47	41.06
5.81				2.43	6.62	15.05	24.91	42.09
6.34			1.12	2.54	6.94	15.81	26.12	44.97
6.86			1.17	2.65	7.24	16.47	27.20	46.77
7.39			1.22	2.75	7.51	17.81	28.24	48.83
7.92			1.27	2.84	7.78	17.94	29.19	50.62
8.45		.779	1.32	2.94	8.05	18.58	30.29	52.46
8.98		.803	1.36	3.08	8.36	19.21	31.42	54.04
9.50		.827	1.40	3.11	8.55	19.66	32.48	55.48
10.03		.851	1.45	3.21	8.85	20.32	33.40	57.01
10.56	.298	.875	1.49	3.29	9.07	20.79	34.49	58.85
11.62	.314	.917	1.58	3.47	9.55	21.80	36.15	61.71
12.67	.330	.960	1.65	3.63	10.01	22.83	37.74	64.35
13.73	.346	1.00	1.72	3.79	10.48	23.93	39.40	66.87
14.78	.359	1.04	1.79	3.95	10.91	24.86	40.86	69.57
15.84	.377	1.09	1.85	4.11	11.29	25.87	42.88	72.32
18.48	.395	1.17	2.00	4.46	12.25	27.96	45.95	77.95
21.12	.444	1.27	2.14	4.78	13.12	29.84	48.83	83.60
26.40	.496	1 42	2.40	5.37	14.78	33.55	54.89	93.37
31.68	.548	1.56	2.64	5.91	16.20	36.79	59.95	103.28
36.96	.589	1.69	2.86	6.46	17.53	39.66	65.17	111.74
42.24	.631	1.81	3.06	6.90	18.78	42.39	69.80	119.93
47.57	.672	1.92	3.23	7.31	19.93	45.23	74.33	128.26
52.80	.721	2.03	3.42	7.70	21.06	47.71	78.46	
63.36	.784	2.24	3.76	8.31	23.07	52.91	82.84	
73.92	.858	2.43	4.02	9.15	24.68	57.65		
84.48	.922	2.61	4.39	9.81	26.97			
95.04	.975	2.77	4.68	10.47	29.70			
105.60	1.02	2.93	5.25	11.09	31.15			
158.40	1.26	3.63	6.09	13.66				
211.20	1.48	4.22	7.02	15.84				
264.00	1.67	4.76	8.24					

Application of Table.

Let it be required to find the flow of water per second in a pipe 22 inches diameter, having 26.40 feet fall per mile; also to find its equivalent flow in statutory miner's inches, or inches measured under a 4-inch pressure.

In "fall per mile" column of table find the given head, 26.40. opposite which in "22-inch diameter" column will be found 14.78 cubic feet, the quantity sought.

In table "Flow of Water Through Vertical Rectangular Openings," in column "Head on Center," find 4 inches, opposite which in "Miner's Inches" column will be found 51.13. Then $14.78 \times 51.13 = 755.7$ statutory miner's inches. Or, as in common practice, $14.78 \times 50 = 739$ statutory miner's inches.

Flow of Water Over Weirs.

HEAD FROM STILL WATER.	FLOW PER SECOND OVER 1 FOOT LENGTH.	HEAD FROM STILL WATER.	FLOW PER SECOND OVER 1 FOOT LENGTH.	HEAD FROM STILL WATER.	FLOW PER SECOND OVER 1 FOOT LENGTH.
Inches	Cubic Feet.	Inches.	Cubic Feet.	Inches.	Cubic Feet.
1.00	.0785	4.00	.6380	7.0	1.4868
1.25	.1101	4.25	.6985	7.5	1.6483
1.50	.1448	4.50	.7435	8.0	1.8158
1.75	.1825	4.75	.8253	8.5	1.9951
2.00	.2235	5.00	.8913	9.0	2.1682
2.25	.2672	5.25	.9634	9.5	2.3511
2.50	.3139	5.50	1.0329	10	2.5394
2.75	.3622	5.75	1.1043	12	3.3390
3.00	.4334	6.00	1.1771	14	4.2087
3.25	.4654	6.25	1.2513	16	5.1407
3.50	.5210	6.50	1.3271	18	6.1341
3.75	.5725	6.75	1.4043	24	9.4300

A boiler should have its feed water supplied regularly and continuously and the water line should be kept at a regular height, and there should never be less than three or four inches of water over the highest part of the furnace, flues, or connections exposed to the flames or hot gases, but it is very bad practice to carry the water too high in a boiler, and as a general thing the above-mentioned depth should not exceed five inches above the "fire-line." Blowing off steam at the safety-valve, or opening the furnace doors, to prevent a rise of steam pressure, causes loss of heat, which is synonymous with waste of fuel, and will never occur where a boiler is properly managed, except upon an emergency.

Weir Table from One-Sixteenth Inch Depth to Twenty-Five Inches Depth.

Inches.		1/16	1/8	3/16	1/4	5/16	3/8	7/16	1/2	9/16	5/8	11/16	3/4	13/16	7/8	15/16		Inches.
		.006	.01	.03	.05	.07	.09	.11	.14	.17	.20	.23	.26	.30	.33	.36		
1	.40	.43	.47	.51	.55	.60	.65	.70	.74	.78	.83	.87	.93	.98	1.03	1.08	.40	1
2	1.14	1.19	1.24	1 30	1.36	1.41	1.47	1.52	1.59	1.65	1.71	1.77	1.83	1.89	1.96	2.02	1.14	2
3	2.09	2.16	2.23	2.29	2.36	2.43	2.50	2.57	2.63	2.71	2.78	2.85	2.92	2.99	3 07	3.14	2 09	3
4	3.22	3.29	3.37	3.44	3.52	3.60	3.68	3.75	3.83	3.91	3.99	4.07	4.16	4.24	4 32	4.41	3.22	4
5	4.50	4.58	4.67	4.75	4.84	4.92	5.01	5.10	5.18	5.27	5.36	5.45	5.54	5.63	5.72	5.81	4.50	5
6	5.90	6.00	6.09	6.18	6.28	6.37	6.47	6.56	6.65	6.75	6.85	6.95	7.05	7.15	7.25	7.35	5.90	6
7	7.44	7.54	7.64	7.74	7.84	7.94	8.05	8.15	8.25	8.35	8.45	8.55	8.66	8.76	8.86	8.97	7.44	7
8	9.10	9.20	9.31	9.42	9.52	9.63	9.74	9.85	9.96	10.07	10.18	10.29	10.40	10.51	10.62	10.73	9.10	8
9	10.86	10.97	11.08	11.19	11.31	11.42	11.54	11.65	11.77	11.88	12.00	12.12	12.23	12.35	12.47	12.59	10.86	9
10	12.71	12.83	13.95	13.07	13.19	13.31	13.43	13.55	13.67	13.80	13.93	14.04	14.16	14.30	14.42	14.55	12.71	10
11	14.67	14.79	14.92	15.05	15.18	15.30	15.43	15.56	15.67	15.81	15.96	16.08	16.20	16.34	16.46	16.59	14.67	11
12	16.73	16.86	16.99	17.12	17.26	17.39	17.52	17.65	17.78	17.91	18.05	18.18	18.32	18.45	18.58	18.72	16.73	12
13	18.87	19.01	19.14	19.28	19.42	19.55	19.69	19.83	19.97	20.10	20.24	20.38	20.52	20.66	20.80	20.94	18.87	13
14	21.09	21.23	21.37	21.48	21.65	21.79	21.94	22.08	22.22	22.35	22.51	22.65	22.79	22.94	23.08	23.23	21.09	14
15	23.38	23.53	23.67	23.82	23.97	24.11	24.26	24.41	24.56	24.71	24.86	25.01	25.16	25.31	25.46	25.61	23.38	15
16	25.76	25.91	26.06	26.21	26.36	26.51	26.66	26.81	26.97	27.12	27.27	27.43	27.58	27.73	27.89	28 04	25.76	16
17	28.20	28.35	28.51	28.66	28.82	28.98	29.14	29.29	29.45	29.60	29.76	29.92	30.08	30 23	30.39	30.55	28.20	17
18	30.70	30.86	31.02	31.18	31.34	31.50	31.66	31.81	31.98	32.15	32.31	32.47	32.63	32.80	32.96	33.12	30.70	18
19	33.29	33.45	33.61	33.78	33.94	34.11	34.27	34.44	34.60	34.77	34.94	35.10	35.27	35.44	35.60	35.77	33.29	19
20	35.94	36.10	36.27	34.46	36.60	37.87	36.94	37.11	37.28	37.45	37.62	37.79	37.96	38.14	38.31	38.48	35.94	20
21	38.65	38.82	39.00	39.17	39.34	39.52	39.69	39.86	40.04	40.21	40.39	40.56	40.73	40.91	41.09	41.26	38.65	21
22	41.43	41.60	41.78	41.96	42.13	42.31	42.49	42.67	42.84	43.02	43.20	43.38	43.56	43.74	43.92	44.10	41.43	22
23	44.28	44.46	44.64	44.82	45.00	45.18	45.38	45.53	45.71	45.90	46.08	46.26	46.43	46 63	46.81	47.00	44.28	23
24	47.18	47.36	47.55	47.72	47.91	48.09	48.28	48.46	48.65	48.83	49.02	49.20	49.39	49.58	49 76	49.93	47.18	24

Friction of Water.

Friction-loss in pounds pressure in 2½-inch fire hose for each 100 feet of length, at each 5 gallons discharged per minute.

Gallons Discharged Per Minute.	Friction-Loss.		Gallons Discharged Per Minute.	Friction-Loss.		Gallons Discharged Per Minute.	Friction-Loss.	
	Rubber Hose.	Leather Hose.		Rubber Hose.	Leather Hose.		Rubber Hose.	Leather Hose.
50	1.40	2.90	155	8.43	10.83	260	24.29	27.81
55	1.53	3.07	160	8.99	11.44	265	25.26	28.84
60	1.69	3.27	165	9.56	12.06	270	26.26	29.90
65	1.86	3.48	170	10.16	12.71	275	27.27	30.97
70	2.06	3.72	175	10.77	13.37	280	28.31	32.07
75	2.27	3.97	180	11.41	14.06	285	29.36	33.18
80	2.51	4.25	185	12.06	14.76	290	30.44	34.32
85	2.76	4.54	190	12.74	15.49	295	31.53	35.47
90	3.04	4.86	195	13.43	16.23	300	32.65	36.65
95	3.33	5.19	200	14.15	17.00	310	34.94	39.07
100	3.65	5.55	205	14.88	17.79	320	37.31	41.57
105	3.98	5.93	210	15.64	18.60	330	39.76	44.15
110	4.34	6.33	215	16.41	19.43	340	42.29	46.81
115	4.71	6.75	220	17.21	20.28	350	44.90	49.55
120	5.11	7.19	225	18.02	21.15	360	47.59	52.38
125	5.52	7.65	230	18.86	22.04	370	50.36	55.29
130	5.96	8.13	235	19.71	22.95	380	53.21	58.28
135	6.41	8.63	240	20.59	23.88	390	56.14	61.35
140	6.89	9.15	245	21.48	24.83	400	59.15	64.50
145	7.39	9.69	250	22.40	25.80			
150	7.90	10.25	255	23.33	26.79			

Iron pipe having a continuous flow of water through it will corrode much faster than one having but a slight or no current through it. An 8-inch cast-iron pipe, coated, 1,000 ft. long, having a continuous current through it, being supplied by a 24-inch pipe and discharging through an open end, discharged but ⅔ as much water at the end of 6 years as when first put down.

A recent experiment at Holyoke, Mass., showed that a 3-inch Globe valve in a line of 3-inch pipe caused a loss of pressure of from 80 lbs. to 41 lbs. per sq. inch.

Superheated steam is the safest and most economical method of using steam. First, it follows a different law from saturated steam; it is governed by Marrote's law of gases and air. You can, by the addition of 480 deg. of heat to the steam in a separate vessel, or superheated, double its volume and also its pressure; if it were attempted to raise steam in a boiler to 692 deg., it would have to be strong enough to stand a pressure of 2,500 lbs. to the square inch.

WORK DONE BY AND POWER REQUIRED FOR FIRE STREAMS, USING RUBBER HOSE AND ONE INCH SMOOTH NOZZLE.

Effective pressure at Nozzle.	Gallons discharged per minute	Horizontal dis. reached by jet.	Vertical dis. reached by jet.	Pressure in pounds required at Hydrant or Steamer to maintain given effective pressure at Nozzle with different lengths of hose.										Effective Pressure at Nozzle.
				100 ft.	200 ft.	300 ft.	400 ft.	500 ft.	600 ft.	700 ft.	800 ft.	900 ft.	1000 ft.	
10	77	49	22	12	15	17	19	22	24	26	29	31	34	10
15	95	60	32	18	22	25	28	32	35	38	41	44	48	15
20	110	70	43	24	29	33	37	42	46	50	55	59	63	20
25	122	80	52	30	36	41	46	52	57	62	67	72	78	25
30	134	90	62	36	43	49	55	62	68	74	81	87	93	30
35	145	99	71	42	50	57	64	72	79	86	94	101	109	35
40	155	109	79	48	57	65	74	82	91	99	108	116	124	40
43	161	114	83	52	61	70	79	88	98	107	116	125	134	43
46	166	119	88	56	65	75	85	94	104	114	123	133	143	46
49	171	124	92	59	70	80	90	101	111	121	131	142	152	49
52	176	129	97	63	74	85	96	107	118	128	139	150	161	52
55	181	134	102	67	78	90	101	113	124	136	147	159	170	55
58	186	139	106	70	82	95	107	119	131	143	156	168	180	58
61	191	143	110	74	87	100	113	125	138	151	164	177	190	61
64	196	148	114	78	91	105	118	132	145	159	172	186	200	64
67	201	152	118	81	96	110	124	139	153	167	181	195	209	67
70	205	156	121	85	100	115	130	144	159	174	189	204	219	70
72	208	158	123	87	103	118	133	148	164	179	194	210	225	72
74	211	161	125	90	106	121	137	152	168	184	200	215	231	74
76	213	163	127	92	108	124	140	156	173	189	205	221	237	76
78	216	166	129	95	111	128	144	161	178	194	211	227	244	78
80	219	168	131	97	114	131	148	165	182	199	216	233	250	80
82	222	170	133	100	117	135	152	170	187	205	222	240	257	82
85	226	173	136	103	121	140	158	176	194	212	231	249	267	85
88	230	176	139	107	126	145	164	182	201	220	239	258	276	88
91	234	179	141	111	130	150	169	188	208	227	247	266	....	91
94	237	182	144	114	134	154	174	194	214	234	255	275	....	94
97	241	184	146	118	139	159	180	201	222	242	263	284	...	97
100	245	186	148	121	143	164	186	207	229	250	272	....	....	100

Loss by Friction of Water in Pipes.

This table shows the loss in pounds pressure per square inch for each 100 feet in length due to friction, when discharging the given quantities of water per minute.

GALS. PER MINUTE.	SIZES OF PIPES—INSIDE DIAMETER.														
	¾ in.	1 in.	1¼in.	1½ in.	2 in.	2½in.	3 in.	4 in.	6 in.	8 in.	10in.	12in.	14in.	16in.	18in.
5	3.3	0.84	0.31	0.12	.....	.....	.....	.....	.....	.....	.....	.....	.....	.....	.....
10	13.0	3.16	1.05	0.47	0.12	.....	.....	.....	.....	.....	.....	.....	.....	.....	.....
15	28.7	6.98	2.38	0.97	.....	.....	.....	.....	.....	.....	.....	.....	.....	.....	.....
20	50.4	12.3	4.07	1.66	0.42	.....	.....	.....	.....	.....	.....	.....	.....	.....	.....
25	78.0	19.0	6.40	2.62	.....	0.21	0.10	.....	.....	.....	.....	.....	.....	.....	.....
30	.....	27.5	9.15	3.75	0.91	.....	.....	.....	.....	.....	.....	.....	.....	.....	.....
35	.....	37.0	12.4	5.05	.....	.....	.....	.....	.....	.....	.....	.....	.....	.....	.....
40	.....	48.0	16.1	6.52	1.60	.....	.....	.....	.....	.....	.....	.....	.....	.....	.....
45	.....	.....	20.2	8.15	.....	.....	.....	.....	.....	.....	.....	.....	.....	.....	.....
50	.....	.....	24.9	10.0	2.44	0.81	0.35	0.09	.....	.....	.....	.....	.....	.....	.....
75	.....	.....	56.1	22.4	5.32	1.80	0.74	.....	.....	.....	.....	.....	.....	.....	.....
100	.....	.....	.....	39.0	9.46	3.20	1.31	0.33	0.05	.....	.....	.....	.....	.....	.....
125	.....	.....	.....	.....	14.9	4.89	1.99	.....	.....	.....	.....	.....	.....	.....	.....
150	.....	.....	.....	.....	21.2	7.0	2.85	0.69	0.10	.....	.....	.....	.....	.....	.....
175	.....	.....	.....	.....	28.1	9.46	3.85	.....	.....	.....	.....	.....	.....	.....	.....
200	.....	.....	.....	.....	37.5	12.47	5.02	1.22	0.17	.....	.....	.....	.....	.....	.....
250	.....	.....	.....	.....	.....	19.66	7.76	1.89	0.26	0.07	0.03	0.01	.....	.....	.....
300	.....	.....	.....	.....	.....	28.06	11.2	2.66	0.37	0.09	0.04	.....	.....	.....	.....
350	.....	.....	.....	.....	.....	.....	15.2	3.65	0.50	0.12	0.05	0.02	.....	.....	.....
400	.....	.....	.....	.....	.....	.....	19.5	4.73	0.65	0.16	0.06	.....	.....	.....	.....
450	.....	.....	.....	.....	.....	.....	25.0	6.01	0.81	0.20	0.07	0.03	.....	.....	.....
500	.....	.....	.....	.....	.....	.....	30.8	7.43	0.96	0.25	0.09	0.04	0.017	0.009	0.005
750	.....	.....	.....	.....	.....	.....	.....	.....	2.21	0.53	0.18	0.08	.....	.....	.....
1000	.....	.....	.....	.....	.....	.....	.....	.....	3.88	0.94	0.32	0.13	0.062	0.036	0.020
1250	.....	.....	.....	.....	.....	.....	.....	.....	.....	1.46	0.49	0.20	.....	.....	.....
1500	.....	.....	.....	.....	.....	.....	.....	.....	.....	2.09	0.70	0.29	0.135	0.071	0.040
1750	.....	.....	.....	.....	.....	.....	.....	.....	.....	.....	0.95	0.38	.....	.....	.....
2000	.....	.....	.....	.....	.....	.....	.....	.....	.....	.....	1.23	0.49	0.234	0.123	0.071
2250	.....	.....	.....	.....	.....	.....	.....	.....	.....	.....	.....	0.63	.....	.....	.....
2500	.....	.....	.....	.....	.....	.....	.....	.....	.....	.....	.....	0.77	0.362	0.188	0.107
3000	.....	.....	.....	.....	.....	.....	.....	.....	.....	.....	.....	1.11	0.515	0.267	0.150
3500	.....	.....	.....	.....	.....	.....	.....	.....	.....	.....	.....	.....	0.697	0.365	0.204
4000	.....	.....	.....	.....	.....	.....	.....	.....	.....	.....	.....	.....	0.910	0.472	0.263
4500	.....	.....	.....	.....	.....	.....	.....	.....	.....	.....	.....	.....	.....	0.593	0.333
5000	.....	.....	.....	.....	.....	.....	.....	.....	.....	.....	.....	.....	.....	0.730	0.408

One pound of water heated in a boiler to 212 deg. is, by the addition of 966 units of heat, converted into 1,720 volumes of steam at atmosphere pressure. The 1,720 volumes may be taken as the measure of the available mechanical force—the 966 units of heat are worth 1,720 volumes of steam. Now, if these 1,720 volumes of steam at 212 deg. be raised 480 deg. higher, or to 692 deg. we will have 3,440 volumes of steam at *double the pressure*, or 15 lbs. to the square inch. The 480 deg. used upon the steam has given us the same quantity as 966 units used upon the water.

Heat goes *four times further* on steam than it does on water—if the heat costs the same as when used upon water, the clear gain is 25 per cent, hence the great economy in using *superheated steam.*

Table—Of the velocity and discharge of water through straight, smooth, cylindrical cast iron pipes with the friction head required for each 100 feet in length; and also the velocity head. Calculated by means of Weisbach's formula. The velocity head remains the same for any *length* of pipe, being dependent only on the *velocity* of the water in the pipe. The entry head is equal to half the velocity head.

VELOCITY IN FEET PER SECOND.	VELOCITY HEAD IN FEET.	DIAMETER IN INCHES.													
		3		3½		4		4½		5		6		7	
		Friction Head in feet.	Cubic feet per minute.	Friction Head in feet.	Cubic feet per minute.	Friction Head in feet.	Cubic feet per minute.	Friction Head in feet.	Cubic feet per minute.	Friction Head in feet.	Cubic feet per minute.	Friction Head in feet.	Cubic feet per minute.	Friction Head in feet.	Cubic feet per minute.
2.0	.062	.659	5.89	.565	8 02	.494	10.4	.439	13.2	.395	16.3	.329	23.5	.282	32.0
2.2	.075	.780	6.48	.669	8.82	.585	11.5	.520	14.6	.468	18.0	.390	25.9	.334	35.3
2.4	.090	.911	7.07	.781	9.62	.683	12.5	.607	15.9	.547	19.6	.456	28.2	.390	38 5
2.6	.105	1.05	7.65	.901	10.4	.788	13.6	.701	17.2	.631	21.3	.526	30.6	.450	41 7
2.8	.122	1.20	8.24	1.03	11.2	.900	14.6	.800	18.5	.720	22.9	.600	32.9	.514	44.9
3.0	.140	1.35	8.83	1.16	12.0	1.02	15.7	.905	19.8	.815	24.5	.679	35.3	.582	48.1
3.2	.160	1.52	9.42	1.31	12.8	1.14	16.7	1.02	21.2	.915	26.2	.763	37.7	.654	51 3
3.4	.180	1.70	10.0	1.46	13.6	1.27	17.8	1.13	22.5	1.02	27.8	.851	40.0	.729	54 5
3.6	.202	1.89	10.6	1.62	14.4	1.41	18.8	1.26	23.8	1.13	29.4	.943	42.4	.808	57.7
3.8	.225	2.08	11.2	1.78	15.2	1.56	19.9	1.39	25.2	1.25	31.0	1.04	44.7	.892	60.9
4.0	.250	2.28	11.8	1.96	16.0	1.71	20.9	1.52	26.5	1.37	32.7	1.14	47.1	.979	64.1
4.2	.275	2.49	12.3	2.14	16.8	1.87	22.0	1.66	27.8	1.50	34.3	1.25	49.5	1.07	67 3
4.4	.302	2.71	12.9	2.33	17.6	2.03	23.0	1.81	29.1	1.63	36.0	1.35	51.8	1.16	70.5
4.6	.330	2.94	13.5	2.52	18.4	2.21	24.0	1.96	30.4	1.76	37.6	1.47	54.1	1.26	73.7
4.8	.360	3.18	14.1	2.72	19.2	2.38	25.1	2.12	31.8	1.91	39.2	1.59	56.5	1.36	76.9
5.0	.390	3.43	14.7	2.94	20.0	2.57	26.2	2.28	33.1	2.05	40.9	1.71	58.9	1.47	80.2
5.2	.422	3.68	15.3	3.15	20.8	2.76	27.2	2.45	34.4	2.21	42.5	1.84	61.2	1.58	83.3
5.4	.455	3.94	15.9	3.38	21.6	2.96	28.2	2.63	35.8	2.37	44.2	1.97	63.6	1.69	86.6
5.6	.490	4 22	16.5	3.61	22.4	3.16	29.3	2.81	37.1	2.53	45.8	2.11	65.9	1.81	89.8
5.8	.525	4.50	17.1	3.85	23.2	3.37	30.3	3.00	38.4	2.70	47.4	2.25	68.3	1.93	93.0
6.0	.562	4.78	17.7	4.10	24.0	3.59	31.4	3.19	39.7	2.87	49.1	2.39	70.7	2.05	96.2
6.2	.600	5.08	18.2	4.36	24.8	3.81	32.4	3.39	41.0	3.05	50.7	2.54	73.0	2.18	99.4
6.4	.640	5.39	18.8	4.62	25.6	4.04	33.5	3.59	42.4	3.23	52.3	2 69	75.4	2.31	102.
6.6	.680	5.70	19.4	4.89	26.4	4.28	34.5	3.80	43.7	3.42	54.0	2.85	77.7	2.44	106.
6.8	.722	6.02	20.0	5.16	27.3	4.52	35.6	4.01	45.0	3.61	55.6	3.01	80.1	2.58	109.
7.0	.765	6.35	20.6	5.45	28.0	4.77	36.6	4.24	46.4	3.81	57.2	3.18	82.4	2.72	112.

Table—Of the velocity and discharge of water through straight smooth, cylindrical cast iron pipes, with the friction head required for each 100 feet in length; and also the velocity head. Calculated by means of Weisbach's formula. The velocity head remains the same for any *length* of pipe, being dependent only on the *velocity* of water in the pipe. The entry head is equal to half the velocity head.—Continued.

VELOCITY IN FEET PER SECOND.	VELOCITY HEAD IN FEET.	DIAMETER IN INCHES.													
		8		9		10		11		12		13		14	
		Fricti'n Head in feet.	Cubic feet per minute.	Fricti'n Head in feet.	Cubic feet per minute.	Friction Head in feet.	Cubic feet per minute.	Friction Head in feet.	Cubic feet per minute.	Friction Head in feet.	Cubic feet per minute.	Friction Head in feet.	Cubic feet per minute.	Friction Head in feet.	Cubic feet per minute.
2.0	.062	.247	41.9	.220	53.0	.198	65.4	.180	79.2	.165	94.2	.152	110	.141	128
2.2	.075	.293	46.1	.260	58.3	.234	72.0	.213	87.1	.195	103.	.180	121	.167	141
2.4	.090	.342	50.2	.304	63.6	.273	78.5	.248	95.0	.228	113.	.210	133	.195	154
2.6	.105	.394	54.4	.350	68.9	.315	85.1	.287	103.	.263	122.	.242	144	.225	167
2.8	.122	.450	58.6	.400	74.2	.360	91.6	.327	111.	.300	132.	.277	156	.257	179
3.0	.140	.509	62.8	.453	79.5	.407	98.2	.370	119.	.339	141.	.313	166	.291	192
3.2	.160	.572	67.0	.508	84.8	.458	105.	.416	127.	.381	151.	.352	177	.327	205
3.4	.180	.638	71.2	.567	90.1	.510	111.	.464	134.	.425	160.	.393	188	.365	218
3.6	.202	.707	75.4	.629	95.4	.566	118.	.514	142.	.472	169.	.435	199	.404	231
3.8	.225	.780	79.6	.693	101.	.624	124.	.567	150.	.520	179.	.480	210	.446	243
4.0	.250	.856	83.7	.761	106.	.685	131.	.623	158.	.571	188.	.527	221	.489	256
4.2	.275	.935	87.9	.832	111.	.748	137.	.680	166.	.624	198.	.576	232	.534	269
4.4	.302	1.02	92.1	.905	116.	.814	144.	.740	174.	.679	207.	.626	243	.582	282
4.6	.330	1.10	96.3	.981	122.	.883	150.	.803	182.	.736	217.	.679	254	.631	295
4.8	.360	1 19	100.	1.06	127.	.954	157.	.867	190.	.795	226.	.734	265	.682	308
5.0	.390	1.28	105.	1.14	132.	1.03	163.	.935	198.	.857	235.	.791	276	.734	321
5.2	.422	1.38	109.	1.23	138.	1.10	170.	1.00	206.	.920	445.	.850	287	.789	333
5.4	.455	1.48	113.	1.31	143.	1.18	177.	1.07	214.	.986	254.	.910	298	.845	346
5.6	.490	1.58	117.	1.40	148.	1.26	183.	1.15	222.	1.05	264.	.973	309	.903	359
5.8	.525	1.68	121.	1.50	154.	1.35	190.	1.22	229.	1.12	273.	1.04	321	.964	372
6.0	.562	1.79	125.	1.59	159.	1.43	196.	1.30	237.	1.19	283.	1.10	332	1.02	385
6.2	.600	1.90	130.	1.69	164.	1.52	203.	1.38	245.	1.27	292.	1.17	343	1.09	397
6.4	.640	2.02	134.	1.79	169.	1.61	209.	1.47	253.	1.35	301.	1.24	354	1.15	410
6.6	.680	2.14	138.	1.90	175.	1.71	216.	1.55	261.	1.42	311.	1.31	365	1.22	423
6.8	.722	2.26	142.	2.01	180.	1.81	222.	1.64	269.	1.50	320.	1.39	376	1.29	436
7.0	.765	2.38	146.	2.12	185.	1.90	229.	1.73	277.	1.59	330.	1.46	387	1.36	449

VELOCITY AND DISCHARGE OF WATER.

TABLE No. 1.

Of the actual velocities and discharges through a pipe 1 foot in diameter; 1 mile or 5,280 diameters in length; and of cast iron, smooth and straight.

Head in Feet Per 100 Feet.	Head in Feet Per Mile.	Velocity in Feet Per Second.	Discharge in Cubic Feet Per Second.	Discharge in Cubic Feet Per 24 Hours.
.0019	.1	.208	.1633	14,114
.0038	.2	.293	.2301	19,880
.0057	.3	.359	.2819	24,360
.0076	.4	.415	.3267	28,229
.0095	.5	.464	.3638	31,435
.0114	.6	.508	.3989	34,464
.0132	.7	.549	.4311	37,247
.0151	.8	.585	.4602	39,760
.0170	.9	.623	.4901	42,343
.0189	1.	.656	.5144	44,431
.0237	.25	.735	.5753	49,701
.0284	.5	.805	.6322	54,604
.0331	.75	.871	.6832	59,011
.0379	2.	.928	.7276	62,870
.0426	.25	.984	.7696	66,484
.0473	.5	1.04	.8168	70,572
.0521	.75	1.08	.8482	73,284
.0568	3.	1.13	.8914	76,982
.0758	4.	1.31	1.028	88,862
.0947	5.	1.47	1.150	99,403
.1136	6.	1.61	1.264	109,209
.1325	7.	1.74	1.366	118,022
.1514	8.	1.86	1.455	125,740
.1703	9.	1.96	1.539	132,969
.1894	10.	2.08	1.633	141,145
.2273	12.	2.27	1.782	153,964
.2652	14.	2.45	1.924	166,233
.3030	16.	2.62	2.057	177,724
.3409	18.	2.78	2.183	188,611
.3788	20.	2.93	2.301	198,806
.4735	25.	3.28	2.572	222,156
.5682	30.	3.59	2.819	243,604
.6629	35.	3.88	3.047	263,260
.7576	40.	4.15	3.267	282,288
.8523	45.	4.40	3.451	298,209
.9470	50.	4.64	3.638	314,352
1.136	60.	5.08	3.989	344,649
1.326	70.	5.49	4.311	372,470
1.515	80.	5.85	4.602	397,613
1.704	90.	6.23	4.900	423,435
1.894	100.	6.56	5.144	444,312
2.083	110.	6.87	5.395	466,128
2.272	120.	7.18	5.639	487,209
2 462	130.	7.47	5.866	506,822
2 652	140.	7.76	6.094	526,521
2.841	150.	8.05	6.322	546,048
3.030	160.	8.30	6.534	564,576
3.219	170.	8.55	6.715	580,176
3.408	180.	8.80	6.903	596,418

TABLE No. 1—*Continued.*

Head in Feet Per 100 Feet.	Head in Feet Per Mile.	Velocity in Feet Per Second.	Discharge in Cubic Feet Per Second.	Discharge in Cubic Feet Per 24 Hours.
3.596	190.	9.04	7.100	613,440
3.788	200.	9.28	7.276	628,704
4.261	225.	9.84	7.696	664,848
4.735	250.	10.4	8.168	705,728
5.208	275.	10.8	8.482	732,844
5.682	300.	11.3	8.914	769,824
6.629	350.	12.3	9.621	831,168
7.576	400.	13.1	10.28	888,624
8.532	450.	13.9	10.91	943,056
9.47	500.	14.7	11.50	994,032
10.41	550.	15.4	12.09	1,044,576
11.36	600.	16.1	12.64	1,092,096
12.30	650.	16.7	13.11	1,132,704
13.25	700.	17.4	13.66	1,180,224
14.20	750.	18.0	14.13	1,220,832
15.15	800.	18.6	14.55	1,257,408
16.09	850.	19.1	15.00	1,296,000
17.04	900.	19.6	15.39	1,329,696
17.99	950.	20.3	15.94	1,377,216
18.94	1000.	20.8	16.33	1,411,456
22.73	1200.	22.7	17.82	1,539,648
26.52	1400.	24.5	19.24	1,662,336
30.30	1600.	26 2	20.57	1,777,248
34.08	1800.	27.8	21.83	1,886,112
37.87	2000.	29.3	23.01	1,988,064
47.35	2500.	32.8	25.72	2,221,560
56.81	3000.	35.9	28.19	2,436,040

Head is the vertical distance from the surface of the water in the reservoir to the center of gravity of the lower end of the pipe when the discharge is into the air; or to the level surface of the lower reservoir when the discharge is under water.

To reduce cubic feet to U. S. Gallons. Multiply by 7.48. Since, therefore, 8 cubic feet are equal to 60 gallons (about), if we divide the cubic feet per 24 hours by 8, we get the number of persons that may be daily supplied with 60 gallons each, by a pipe *constantly running full*, and at the velocity given in the third column.

Don't forget that the grain of a well-hardened and broken piece of steel is much finer than that of the bar it was taken from. If the grain is as coarse as, or coarser than the original bar, the heat used (whatever it may have been) was too high to refine the steel in hardening. Don't decide the quality of any bar of steel by the appearance of its grain. The coarseness or fineness depends much more on the heat at which it left the hammer or rolls than on its quality.

Don't try to harden any bar of steel without first removing the scale from it, as the outside will be likely to be soft enough to file easily.

Don't try to harden large tools in a small bath, or in *still water.*

TABLE SHOWING NUMBER OF GALLONS OF WATER DISCHARGED THROUGH DIFFERENT SIZE APERTURES, AND WITH DIFFERENT HEADS OF WATER, IN ONE MINUTE, AND TWENTY-FOUR HOURS.

Diam. of Aper		3-16		1-4		3-8		1-2		5-8		3-4		7-8		1	
Head of Wat'r in Feet.	Pounds Pres're per Square Inch.	GALLONS DISCHARGED. Per Minute	Per 24 Hrs.	GALLONS DISCHARGED. Per Minute	Per 24 Hours.	GALLONS DISCHARGED. Per Minute	Per 24 Hours.	GALLONS DISCHARGED. Per Minute	Per 24 Hours.	GALLONS DISCHARGED. Per Min'e	Per 24 Hrs.	GALLONS DISCHABGED. Per Min'e	Per 24 Hrs.	GALLONS DISCHARGED. Per Min'e	Per 24 Hrs.	GALLONS DISCHARGED. Per Min'e	Per 24 Hrs.
20.	8.8	3.29	4737	5.76	8294	13.16	18948	23.04	33176	36.5	52646	52.6	75792	71.6	103204	92.1	132704
40.	17.6	4.64	6681	8.32	11884	18.56	26724	33.28	47536	51.6	74347	74.2	106896	101.2	145728	133.1	190144
60.	26.4	5.69	8193	10.24	14560	22.76	32772	40.96	58240	63.3	91166	91.	131088	124.1	178718	163.8	232960
80.	35.2	6.58	9475	11.52	16588	26.32	37900	46.08	66352	73.1	105307	105.2	151600	143.3	206424	184.3	265408
100.	44.	7.36	10598	12.8	18432	29.44	42392	51.2	73728	81.8	117777	117.7	169568	160.3	230846	204.8	294912
120.	52.8	8.06	11606	14.08	20256	32.24	46424	56.32	81024	89.5	128995	128.9	185696	175.5	252835	225.2	324096
140	61.6	8.7	12528	15.36	22118	32.28	50112	61.44	88472	96.7	139291	129.1	200448	189.6	273009	245.7	353888
160.	70.4	9.3	13392	16.48	23808	37.2	53568	65.92	95232	103.3	148752	148.8	214272	202.6	291744	263.6	380928
180.	79.2	9.87	14212	17.28	24880	39.48	56848	69.12	99520	109.7	157968	157.9	227392	215.	309600	276.4	398080
200.	88.	10.4	14976	18.56	26724	41.6	59904	74.24	106896	115.6	166464	166.4	239616	226.6	326304	296 8	427584
		1 1-8		1 1-4		1 3-8		1 1-2		1 3-4		2		2 1-4		2 1-2	
20.	8.8	118.4	170496	146.	210584	176.9	254736	210.	303168	286.	412816	368.	530816	473.	681984	584.	842336
40.	17.6	168.2	242208	206.4	297388	249.8	359712	296.8	427584	404.	582912	532.	760576	672.	968832	825.	1189552
60.	26.4	205.1	295344	253.2	364664	306.4	441216	364.	524352	496.	714872	655.	931840	840.	1181376	1012.	1258656
80.	35.2	236.9	341136	292.4	421228	353.9	509616	420.	606400	573.	825696	737.	1061632	947.	1364544	1169.	1684912
100.	44.	265.	381600	327.2	471108	395.8	569952	470.8	678272	641.	923384	819.2	1179648	1060.	1526400	1308.	1884432
120.	52.8	290.2	417888	358.	515980	433.5	624240	515.6	742784	702.	1011340	900.	1296384	1160.	1671552	1432.	2063920
140.	61.6	313.4	451296	386.8	557164	468.1	674064	516.4	801792	758.	1092036	982.	1415552	1253.	1805184	1547.	2228656
160.	70.4	334.9	482256	413.2	595008	500.3	720432	595.2	857688	810.	1166976	1054.	1523712	1339.	1929024	1652.	2380032
180.	79.2	355.4	511776	438.8	631872	530.4	763776	631.	909568	860.	1238400	1105.	1592320	1421.	2047104	1755.	2527488
200.	88.	374.7	539568	462.4	665856	559.7	805968	665.6	958464	906.	1305216	1187.	1710336	1498.	2158272	1849.	2663424

Weight of Water (At 62¼ lbs. per Cubic Foot) Contained in One Foot Length of Pipe of Different Bores.

BORE.	WATER.	BORE.	WATER.	BORE.	WATER.	BORE.	WATER.
Ins.	Lbs.	Ins.	Lbs.	Ins.	Lbs.	Ins.	Lbs.
⅛	.00531	3	3.0557	7¾	20.392	18	110.00
¼	.02122	3⅛	3.3156	8	21.729	18½	116.20
⅜	.04775	3¼	3.5862	8¼	23.109	19	122.56
½	.08488	3⅜	3.8673	8½	24.530	19½	129.10
⅝	.13263	3½	4.1591	8¾	25.993	20	135.81
¾	.19098	3⅝	4.4615	9	27.501	21	149.73
⅞	.25994	3¾	4.7745	9½	30.641	22	164.33
1	.33952	3⅞	5.0980	10	33.952	23	179.60
1⅛	.42969	4	5.4323	10½	37.432	24	195.56
1¼	.53050	4¼	6.1325	11	41.082	25	212.20
1⅜	.64190	4½	6.8750	11½	44.901	26	229.51
1½	.76392	4¾	7.6601	12	48.891	27	247.51
1⅝	.89654	5	8.4880	12½	53.049	28	266.18
1¾	1.0398	5¼	9.3580	13	57.379	29	285.53
1⅞	1.1936	5½	10.270	13½	61.877	30	305.57
2	1.3581	5¾	11.225	14	66.545	31	326.27
2⅛	1.5331	6	12.223	14½	71.384	32	347.66
2¼	1.7188	6¼	13.262	15	76.392	33	369.74
2⅜	1.9150	6½	14.345	15½	81.568	34	392.48
2½	2.1220	6¾	15.469	16	86.916	35	415.90
2⅝	2.3395	7	16.636	16½	92.434	36	440.0
2¾	2.5676	7¼	17.846	17	98.121		
2⅞	2.8063	7½	19.098	17½	103.97		

And in larger pipes, as the squares of their bores. Thus a pipe of 40 or 60 inches bore will contain four times as much as one of 20 or 30 inches bore; and one of $\frac{3}{16}$, one-fourth as much as one of ⅜ inch. At 62¼ lbs. per cubic foot, a square inch of water 1 foot high weighs .432292 of a lb.

Water is sometimes used for testing boilers through its expansion by heat, and this is the ratio of its increase: At a temperature of 42 degrees Fahr. it is at its greatest density, or 1.00000 in bulk; at 62 deg. its bulk is increased to 1.00083; at 92 deg. 1.00477; at 122 deg. 1.01116; at 152 deg. 1.01934; at 182 deg. 1.02916; at 212 deg. it is 1.04012.

Every boiler should be supplied with two nozzles, one for steam outlet and one for the safety-valve. The practice of putting up a nest of boilers with only one safety-valve is dangerous and pernicious. Every boiler should have its own independent safety-valve. There should be a door at rear end of setting 3 by 2 feet. This is important to facilitate cleaning the bottom of boiler, and for removing ashes that may accumulate in rear of bridge wall. The man-hole frame should be put on the inside of boiler shell. If well done, a more effective reinforcing of the strength of man-hole is secured, as well as a tighter joint. Many boiler foundations are simply brick-work laid on the ground. This is wrong. When the boiler has been used a short time, the foundations settle and the walls crack and tumble down. The walls should be heavy, with air spaces in the center to prevent fractures from expansion and contraction.

The following table is arranged to show at a glance the equivalent pressure due to columns of water from 10 to 400 feet in height. Also more particularly to show the number of gallons of water delivered, and the height to which it will be projected through nozzles from one-quarter inch to two inches diameter.

Height of column in feet.	Corresponding pressure in lbs. per square inch.	DIAMETER OF NOZZLE IN INCHES.																	
		¼		½		⅝		¾		1		1¼		1½		1¾		2	
		Height of jet in feet.	Gallons discharged per minute.	Height of jet in feet.	Gallons discharged per minute.	Height of jet in feet.	Gallons discharged per minute.	Height of jet in feet.	Gallons discharged per minute.	Height of jet in feet.	Gallons discharged per minute.	Height of jet in feet.	Gallons discharged per minute.	Height of jet in feet.	Gallons discharged per minute.	Height of jet in feet.	Gallons discharged per minute.	Height of jet in feet.	Gallons discharged per minute.
10	4.3	9.37	3.6	9.7	14.5	9.7	22.7	9.8	32.8	9.8	58.2	9.9	91.	9.9	130.8	9.9	177.6	9.9	232.8
20	8.6	17.5	5.1	18.7	20.6	19.	32.2	19.2	46.2	19.4	82.3	19.5	128.4	19.6	184.8	19.6	252.	19.7	328.8
30	13.6	24.4	6.4	27.2	25.2	27.7	39.4	28.3	56.8	28.6	100.9	29.	157.2	29.1	226.8	29.2	309.6	29.3	403.2
40	17.3	30.0	7.3	35.0	29.6	36.	45.5	37.	65.5	37.5	116.5	38.	182.4	38.3	261.6	38.6	356.4	38.7	465.6
56	21.6	34.0	8.1	42.2	32.5	44.	50.9	45.	73.3	46.1	130.8	47.	204.	47.4	292.8	48.	408.	48.	520.8
60	26.	37.5	8.9	48.7	35.6	51.	55.7	52.	80.3	54.4	142.8	55.	223.2	56.2	320.4	57.	436.8	57.	571.2
70	30.3	39.	9.6	55.	38.5	58.	60.1	60.	86.8	62.4	154.8	64.	241.2	65.	346.8	66.	471.6	66.	616.8
80	34.6	40.	10.3	60.	41.2	64.	64.3	67.	92.6	70.	164.4	72.	258.	73.	370.8	74.	505.2	75.	658.8
90	39.	39.4	10.9	65.	43.7	70.	68.3	73.	98.4	77.	174.0	80.	272.4	82.	393.6	83.	535.2	84.	711.6
100	43.3	37.5	11.5	69.	46.1	75.	72.0	79.	103.7	84.	183.6	87.	288.	90.	415.2	91.	565.2	92.	738.
120	52.	.....	.....	75.	50.4	84.	78.8	90.	113.5	97.	201.6	102.	315.6	105.	453.6	107.	626.4	109.	807.6
140	60.6	.....	.....	79.	54.5	91.	85.2	99.	122.4	109.	217.2	116.	340.8	120.	490.8	123.	668.4	125.	872.4
160	69.3	.....	.....	80.	58.1	96.	90.8	106.	131.2	120.	232.9	128.	364.	133.	524.2	137.	713.5	140.	931.9
180	78.	.....	.....	78.75	61.6	99.	96.5	112.	139.1	129.	247.1	139.	373.2	141.	556.1	151.	756.9	155.	988.6
200	86.6	..	.....	75.	65.2	100.	101.8	116.	146.4	137.	260.4	150.	406.8	158.	588.	166.	798.	169.	1043.
220	95.1	.	.....	....	.....	99.	106.7	119.	153.7	145.	273.3	159.	427.1	165.	615.	177.	837.1	182.	1087.6
240	104.	.. . .	.....	.....	....	96.	111.5	120.	160.6	150.	285.5	168.	446.1	180.	642.4	189.	874.3	195.	1142.
260	112.6	.....	.....	.....	.....	92.	116.0	119.2	167.1	155.	297.1	175.	464.2	190.	668.5	200.	909.9	208.	1188.4
280	121.2	.....	.....	.....	.....	84.	120.4	116.7	173.4	158.	308.3	182.	481.8	198.	693.8	210.	944.3	229.	1233.4
300	130.	.....	.....	.....	.....	75.	124.8	112.5	178.8	160.	319.2	187.	498.	206.	717.6	220.	979.2	250.	1276.8
350	151.4	.....	.....	..	.....	.....	.....	.....	.....	.....	.....	198.	538.5	222.	775.5	241.	1055.5	255.	1378.7
400	173.0	. . ..	.....	. .	.....	.....	.....	.....	.....	.....	.....	200.	576.	233.	829.4	257.	1128.9	275.	1474.5

The pressure or head of water is taken at the nozzle, no allowance being made for friction in the pipe. In practical calculations to determine the height which water can be thrown the head consumed by the friction of the water in flowing from the pump to the nozzle must be considered.

Pressure of Water Per Square Inch for Different Heights.

Feet Head.	Pressure per sq. inch.	Feet Head.	Pressure per sq. inch.	Feet Head.	Pressure per sq. inch.	Feet Head.	Pressure per sq. inch.
1	0.43	135	58.48	270	116.96	425	184.10
5	2.16	140	60.64	275	119.12	450	195.00
10	4.33	145	62.81	280	121.29	475	205.77
15	6.49	150	64.97	285	123.45	500	216.58
20	8.66	155	67.14	290	125.62	525	227.42
25	10.82	160	69.31	295	127.78	550	238.25
30	12.99	165	71.47	300	129.95	575	249.09
35	15.16	170	73.64	305	132.12	600	259.90
40	17.32	175	75.80	310	134.28	625	270.73
45	19.49	180	77.97	315	136.46	650	281.56
50	21.65	185	80.14	320	138.62	675	292.40
55	23.82	190	82.30	325	140.79	700	303.22
60	25.99	195	84.47	330	142.95	725	314.05
65	28.15	200	86.63	335	145.12	750	324.88
70	30.72	205	88.80	340	147.28	775	335.72
75	32.48	210	90.96	345	149.45	800	346.54
80	34.65	215	93.13	350	151.61	825	357.37
85	36.82	220	95.30	355	153.78	850	368.20
90	38.98	225	97.46	360	155.94	875	379.03
95	41.15	230	99.63	365	158.10	900	389.86
100	43.31	235	101.79	370	160.27	925	400.70
105	45.48	240	103.96	375	162.45	950	411.54
110	47.64	245	106.13	380	164.61	975	422.35
115	49.81	250	108.29	385	166.78	1000	433.18
120	51.98	255	110.46	390	168.94	1500	650.00
125	54.15	260	112.62	395	171.11	2000	866.50
130	56.31	265	114.79	400	173 27	3000	1300.00

To compute the pressure per square inch of a column of water, multiply the head in feet by .434.

A stop valve should in all cases be placed upon the feed-pipe to a boiler, and as close to the boiler as possible. The chief object being to cover all valves behind it so that if anything happens to the check valve or any part of the pump, communication with the boiler can be shut off at once, allowing any necessary work to be done. The object of a check-valve is not only to hold the water from returning through the pipes, but is necessary to relieve the pressure, also lessen the wear and tear upon the valves of the pump. A pump will, if in good order, supply a boiler without a check-valve, but should any air get inside the pump, it will be found very difficult if not impossible, to start it.

WEIGHT OF FLAT ROLLED IRON PER LINEAL FOOT.

For Thicknesses from $\frac{1}{16}$ in. to 2 in and Widths from 1 in. to 12¾ in.

Iron weighing 480 lbs. per cubic foot.

Thickness in Inches.	1″	1¼	1½″	1¾″	2″	2¼″	2½″	2¾″	12″
$\frac{1}{16}$	.208	.260	.313	.365	.417	.469	.521	.573	2.50
$\frac{1}{8}$	.417	.521	.625	.729	.833	.938	1.04	1.15	5.00
$\frac{3}{16}$	.625	.781	.938	1.09	1.25	1.41	1.56	1.72	7.50
$\frac{1}{4}$	.833	1.04	1.25	1.46	1.67	1.88	2.08	2.29	10.00
$\frac{5}{16}$	1.04	1.30	1.56	1.82	2.08	2.34	2.60	2 86	12.50
$\frac{3}{8}$	1.25	1.56	1.88	2.19	2.50	2.81	3.13	3.44	15.00
$\frac{7}{16}$	1.46	1.82	2.19	2.55	2.92	3.28	3.65	4 01	17.50
$\frac{1}{2}$	1.67	2.08	2.50	2.92	3.33	3.75	4.17	4.58	20.00
$\frac{9}{16}$	1.88	2.34	2.81	3.28	3.75	4.22	4.69	5.16	22.50
$\frac{5}{8}$	2.08	2.60	3.13	3.65	4.17	4.69	5.21	5.73	25.00
$\frac{11}{16}$	2.29	2.86	3.44	4.01	4.58	5.16	5.73	6.30	27.50
$\frac{3}{4}$	2.50	3.13	3.75	4.38	5.00	5.63	6.25	6.88	30.00
$\frac{13}{16}$	2.71	3.39	4.06	4.74	5.42	6.09	6.77	7.45	32.50
$\frac{7}{8}$	2.92	3.65	4.38	5.10	5.83	6.56	7.29	8.02	35.00
$\frac{15}{16}$	3.13	3.91	4.69	5.47	6.25	7.03	7.81	8.59	37.50
1	3.33	4.17	5.00	5.83	6.67	7.50	8.33	9.17	40.00
$1\frac{1}{16}$	3.54	4.43	5.31	6.20	7.08	7.97	8.85	9.74	42.50
$1\frac{1}{8}$	3.75	4.69	5.63	6.56	7.50	8.44	9.38	10 31	45.00
$1\frac{3}{16}$	3.96	4.95	5.94	6.93	7.92	8.91	9.90	10.89	47.50
$1\frac{1}{4}$	4.17	5.21	6.25	7.29	8.33	9.38	10.42	11.46	50.00
$1\frac{5}{16}$	4.37	5.47	6.56	7.66	8.75	9.84	10.94	12.03	52.50
$1\frac{3}{8}$	4.58	5.73	6.88	8.02	9.17	10.31	11.46	12.60	55.00
$1\frac{7}{16}$	4.79	5.99	7.19	8.39	9.58	10.78	11.98	13.18	57.50
$1\frac{1}{2}$	5.00	6.25	7.50	8.75	10.00	11.25	12.50	13.75	60.00
$1\frac{9}{16}$	5.21	6.51	7.81	9.11	10.42	11.72	13.02	14.32	62.50
$1\frac{5}{8}$	5.42	6.77	8.13	9.48	10.83	12.19	13.54	14.90	65.00
$1\frac{11}{16}$	5.63	7.03	8.44	9.84	11.25	12.66	14.06	15.47	67.50
$1\frac{3}{4}$	5.83	7.29	8.75	10.21	11.67	13.13	14.58	16.04	70.00
$1\frac{13}{16}$	6.04	7.55	9.06	10.57	12.08	13.59	15.10	16.61	72.50
$1\frac{7}{8}$	6.25	7.81	9.38	10.94	12.50	14.06	15.63	17.19	75.00
$1\frac{15}{16}$	6.46	8.07	9.69	11.30	12.92	14.53	16.15	17.76	77.50
2	6.67	8.33	10.00	11.67	13.33	15.00	16.67	18.33	80.00

WEIGHT OF FLAT ROLLED IRON PER LINEAL FOOT.

(*Continued.*)

Thickness in Inches.	3″	3¼″	3½″	3¾″	4″	4¼″	4½″	4¾″	12″
1/16	.625	.677	.729	.781	.833	.885	.938	.990	2.50
1/8	1.25	1.35	1.46	1.56	1.67	1.77	1.88	1.98	5.00
3/16	1.88	2.03	2.19	2.34	2.50	2.66	2.81	2.97	7.50
1/4	2.50	2.71	2.92	3.13	3.33	3.54	3.75	3.96	10.00
5/16	3.13	3.39	3.65	3.91	4.17	4.43	4.69	4.95	12.50
3/8	3.75	4.06	4.38	4.69	5.00	5.31	5.63	5.94	15.00
7/16	4.38	4.74	5.10	5.47	5.83	6.20	6.56	6.93	17.50
1/2	5.00	5.42	5.83	6.25	6.67	7.08	7.50	7.92	20.00
9/16	5.63	6.09	6.56	7.03	7.50	7.97	8.44	8.91	22.50
5/8	6.25	6.77	7.29	7.81	8.33	8.85	9.38	9.90	25.00
11/16	6.88	7.45	8.02	8.59	9.17	9.74	10.31	10.89	27.50
3/4	7.50	8.13	8.75	9.38	10.00	10.63	11.25	11.88	30.00
13/16	8.13	8 80	9.48	10.16	10.83	11.51	12.19	12.86	32.50
7/8	8.75	9.48	10.21	10.94	11.67	12.40	13.13	13.85	35.00
15/16	9.38	10.16	10.94	11.72	12.50	13.28	14.06	14.84	37.50
1	10.00	10.83	11.67	12.50	13.33	14.17	15.00	15.83	40.00
1 1/16	10.63	11.51	12.40	13.28	14.17	15.05	15.94	16.82	42.50
1 1/8	11.25	12.19	13.13	14.06	15.00	15.94	16.88	17.81	45.00
1 3/16	11.88	12.86	13.85	14.84	15.83	16.82	17.81	18.80	47.50
1 1/4	12.50	13.54	14.58	15.63	16.67	17.71	18.75	19.79	50.00
1 5/16	13.13	14.22	15.31	16.41	17.50	18.59	19.69	20.78	52.50
1 3/8	13.75	14.90	16.04	17.19	18.33	19.48	20.63	21.77	55.00
1 7/16	14.38	15.57	16.77	17.97	19.17	20.36	21.56	22.76	57.50
1 1/2	15.00	16.25	17.50	18.75	20.00	21.25	22.50	23.75	60.00
1 9/16	15.63	16.93	18.23	19.53	20.83	22.14	23.44	24.74	62.50
1 5/8	16.25	17.60	18.96	20.31	21.67	23.02	24.38	25.73	65.00
1 11/16	16.88	18.28	19.69	21.09	22.50	23.91	25.31	26.72	67.50
1 3/4	17.50	18.96	20.42	21.88	23.33	24.79	26.25	27.71	70.00
1 13/16	18.13	19.64	21.15	22.66	24.17	25.68	27.19	28.70	72.50
1 7/8	18.75	20.31	21.88	23.44	25.00	26.56	28.13	29.69	75.00
1 15/16	19.38	20.99	22.60	24.22	25.83	27.45	29.06	30.68	77.50
2	20.00	21.67	23.33	25.00	26.67	28.33	30.00	31.67	80.00

Inertia is that property of all bodies by which they can not stop themselves if started in motion, nor start themselves if not in motion, nor change their direction or speed of motion if they are moving. They must be started, stopped, slowed, hastened, or swerved by some force from without.

WEIGHT OF FLAT ROLLED IRON PER LINEAL FOOT.

(*Continued.*)

Thickness in Inches.	5″	5¼″	5½″	5¾″	6″	6¼″	6½″	6¾″	12″
1/16	1.04	1.09	1.15	1.20	1.25	1.30	1.35	1.41	2.50
1/8	2.08	2.19	2.29	2.40	2.50	2.60	2.71	2.81	5.00
3/16	3.13	3.28	3.44	3.59	3.75	3.91	4.06	4.22	7.50
1/4	4.17	4.38	4.58	4.79	5.00	5.21	5.42	5.63	10.00
5/16	5.21	5.47	5.73	5.99	6.25	6.51	6.77	7.03	12.50
3/8	6.25	6.56	6.88	7.19	7.50	7.81	8.13	8.44	15.00
7/16	7.29	7.66	8.02	8 39	8.75	9.11	9.48	9.84	17.50
1/2	8.33	8.75	9.17	9.58	10.00	10.42	10.83	11.25	20.00
9/16	9.38	9.84	10.31	10.78	11.25	11.72	12.19	12.66	22.50
5/8	10.42	10.94	11.46	11.98	12.50	13.02	13.54	14.06	25.00
11/16	11.46	12.03	12.60	13.18	13.75	14.32	14.90	15.47	27.50
3/4	12.50	13.13	13.75	14.38	15.00	15.63	16.25	16.88	30.00
13/16	13.54	14.22	14.90	15.57	16.25	16.93	17.60	18.28	32.50
7/8	14.58	15.31	16.04	16.77	17.50	18.23	18.96	19.69	35.00
15/16	15.63	16.41	17.19	17.97	18.75	19.53	20.31	21.09	37.50
1	16.67	17.50	18.33	19.17	20.00	20.83	21.67	22.50	40.00
1 1/16	17.71	18.59	19 48	20.36	21.25	22.14	23.02	23.91	42.50
1 1/8	18.75	19.69	20.63	21.56	22.50	23.44	24.38	25.31	45.00
1 3/16	19 79	20.78	21.77	22.76	23.75	24.74	25.73	26.72	47.50
1 1/4	20.83	21.88	22.92	23.96	25.00	26.04	27.08	28.13	50.00
1 5/16	21.88	22.97	24 06	25.16	26.25	27.34	28.44	29.53	52.50
1 3/8	22.92	24.06	25,21	26.35	27.50	28.65	29.79	30.94	55.00
1 7/16	23.96	25.16	26 35	27.55	28.75	29.95	31.15	32.34	57.50
1 1/2	25.00	26.25	27.50	28.75	30.00	31.25	32.50	33.75	60.00
1 5/16	26.04	27.34	28.65	29.95	31.25	32.55	33.85	35 16	62.50
1 5/8	27.08	28.44	29.79	31.15	32.50	33.85	35.21	36.56	65.00
1 11/16	28.13	29.53	30 94	32.34	33.75	35.16	36.56	37.97	67.50
1 3/4	29.17	30.63	32.08	33.54	35.00	36.46	37.92	39.38	70.00
1 13/16	30.21	31.72	33.23	34.74	36.25	37.76	39.27	40.78	72.50
1 7/8	31.25	32.81	34.38	35.94	37·50	39.06	40.63	42.19	75.00
1 15/16	32.29	33.91	35.52	37.14	38.75	40.36	41.98	43.59	77.50
2	33.33	35.00	36.67	38.33	40.00	41.67	43.33	45.00	80.00

The feed-water for a boiler should be introduced through its own independent pipe, with a suitable check and stop valve. It is not good practice to blow and feed through the same pipe. Tubes of greater diameter than 3 inches may be used with good results; all depends upon their proper arrangement. All internal boiler braces should be made of iron one inch in diameter with no weld, and only the best iron should be used, preferably Norway, or Swedish iron.

WEIGHT OF FLAT ROLLED IRON PER LINEAL FOOT.

(*Continued.*)

Thickness in Inches.	7″	7¼″	7½″	7¾″	8″	8¼″	8½″	8¾″	12″
1/16	1.46	1.51	1.56	1.61	1.67	1.72	1.77	1.82	2.50
1/8	2.92	3.02	3.13	3.23	3.33	3.44	3.54	3 65	5.00
3/16	4.38	4.53	4.69	4.84	5.00	5.16	5.31	5.47	7.50
1/4	5.83	6.04	6.25	6.46	6.67	6.88	7.08	7.29	10.00
5/16	7.29	7.55	7.81	8.07	8.33	8.59	8.85	9.11	12.50
3/8	8.75	9.06	9.38	9.69	10.00	10.31	10.63	10.94	15.00
7/16	10.21	10.57	10.94	11.30	11.67	12.03	12.40	12.76	17.50
1/2	11.67	12.08	12.50	12.92	13.33	13.75	14.17	14.58	20.00
9/16	13.13	13.59	14.06	14.53	15.00	15.47	15.94	16.41	22.50
5/8	14.58	15.10	15.63	16.15	16.67	17.19	17.71	18.23	25.00
11/16	16.04	16.61	17.19	17.76	18.33	18.91	19.48	20.05	27.50
3/4	17.50	18.13	18.75	19.38	20.00	20.63	21.25	21.88	30.00
13/16	18.96	19.64	20.31	20.99	21.67	22.34	23.02	23.70	32.50
7/8	20.42	21.15	21.88	22.60	23.33	24.06	24.79	25.52	35.00
15/16	21.88	22.66	23.44	24.22	25.00	25.78	26.56	27.34	37.50
1	23.33	24.17	25.00	25.83	26.67	27.50	28.33	29.17	40.00
1 1/16	24.79	25.68	26.56	27.45	28.33	29.22	30.10	30.99	42.50
1 1/8	26.25	27.19	28.13	29.06	30.00	30.94	31.88	32.81	45.00
1 3/16	27.71	28.70	29.69	30.68	31.67	32.66	33.65	34.64	47.50
1 1/4	29.17	30.21	31.25	32.29	33.33	34.38	35.42	36.46	50.00
1 5/16	30.62	31.72	32.81	33.91	35.00	36.09	37.19	38.28	52.50
1 3/8	32.08	33.23	34.38	35.52	36.67	37.81	38.96	40.10	55.00
1 7/16	33.54	34.74	35.94	37.14	38.33	39.53	40.73	41.93	57.50
1 1/2	35.00	36.25	37.50	38.75	40.00	41.25	42.50	43.75	60.00
1 9/16	36.46	37.76	39.06	40.36	41.67	42.97	44.27	45.57	62.50
1 5/8	37.92	39.27	40.63	41.98	43.33	44.69	46.04	47.40	65.00
1 11/16	39.38	40.78	42.19	43.59	45.00	46.41	47.81	49.22	67.50
1 3/4	40.83	42.29	43.75	45.21	46.67	48.13	49.58	51.04	70.00
1 13/16	42.29	43.80	45.31	46.82	48.33	49.84	51.35	52.86	72.50
1 7/8	43.75	45.31	46.88	48.44	50.00	51.56	53.13	54.69	75.00
1 15/16	45.21	46.82	48.44	50.05	51.67	53.28	54.90	56.51	77.50
2	46.67	48.33	50.00	51.67	53.33	55.00	56.67	58.33	80.00

It is not practicable to lift water as high as 33⅓ feet. It might be possible under favorable conditions at the level of the sea where the atmospheric pressure would just about balance a column of water of that height. The height to which a pump will lift water depends on the pressure of the atmosphere, which is different at different heights from the sea, being less as the height increases. On a high mountain a pump will not lift water as high as it will at the level of the sea. The pressure of the atmosphere also varies slightly at different times on the same level.

WEIGHT OF FLAT ROLLED IRON PER LINEAL FOOT.

(*Continued.*)

Thickness in Inches.	9″	9¼″	9½″	9¾″	10″	10¼″	10½″	10¾″	12″
1/16	1.88	1.93	1.98	2.03	2 08	2.14	2.19	2.24	2.50
1/8	3.75	3 85	3.96	4.06	4.17	4.27	4.38	4.48	5.00
3/16	5.63	5.78	5.94	6.09	6.25	6.41	6.56	6.72	7.50
1/4	7.50	7.71	7.92	8.13	8.33	8.54	8.75	8.96	10.00
5/16	9.38	9.64	9.90	10.16	10.42	10.68	10.94	11.20	12.50
3/8	11.25	11.56	11.88	12.19	12.50	12.81	13.13	13.44	15.00
7/16	13.13	13.49	13.85	14.22	14.58	14.95	15.31	15.68	17.50
1/2	15.00	15.42	15.83	16.25	16.67	17.08	17.50	17.92	20.00
9/16	16.88	17.34	17.81	18.28	18.75	19.22	19.69	20.16	22.50
5/8	18.75	19.27	19.79	20.31	20.83	21.35	21.88	22.40	25.00
11/16	20.63	21.20	21.77	22.34	22.92	23.49	24.06	24.64	27.50
3/4	22.50	23.13	23.75	24.38	25.00	25.62	26.25	26.88	30.00
13/16	24.38	25.05	25.73	26.41	27.08	27.76	28.44	29.11	32.50
7/8	26.25	26.98	27.71	28.44	29.17	29.90	30.63	31.35	35 00
15/16	28.13	28.91	29.69	30.47	31.25	32.03	32.81	33.59	37.50
1	30.00	30.83	31.67	32.50	33.33	34.17	35.00	35.83	40.00
1 1/16	31.88	32.76	33.65	34.53	35.42	36.30	37.19	38.07	42.50
1 1/8	33.75	34.69	35.63	36.56	37.50	38.44	39.38	40.31	45.00
1 3/16	35.63	36.61	37.60	38.59	39.58	40.57	41.56	42.55	47.50
1 1/4	37.50	38.54	39.58	40.63	41.67	42.71	43.75	44.79	50.00
1 5/16	39.38	40.47	41.56	42.66	43.75	44.84	45.94	47.03	52.50
1 3/8	41.25	42.40	43.54	44.69	45.83	46.98	48.13	49.27	55.00
1 7/16	43.13	44.32	45.52	46.72	47.92	49.11	50.31	51.51	57.50
1 1/2	45.00	46.25	47.50	48.75	50.00	51.25	52.50	53.75	60.00
1 9/16	46.88	48.18	49.48	50.78	52.08	53.39	54.69	55.99	62.50
1 5/8	48.75	50.10	51.46	52.81	54.17	55.52	56.88	58.23	65.00
1 11/16	50.63	52.03	53.44	54.84	56.25	57.66	59.06	60.47	67.50
1 3/4	52.50	53.96	55.42	56.88	58.33	59.79	61.25	62.71	70.00
1 13/16	54.38	55.89	57.40	58.91	60 42	61.93	63.44	64.95	72.50
1 7/8	56.25	57.81	59.38	60.94	62.50	64.06	65.63	67.19	75.00
1 15/16	58.13	59.74	61.35	62.97	64.58	66.20	67.81	69.43	77.50
2	60.00	61.67	63.33	65.00	66.67	68.33	70.00	71.67	80.00

At the instant steam is generated, in a boiler, from the water heated to 212 deg. temperature, the steam has a pressure of one atmosphere, about 15 lbs. per square inch above zero or vacuum gauge, and the pressure in the boiler by a vacuum gauge would show 15 lbs., the same as atmospheric pressure would show on a zero pressure or vacuum gauge. The steam pressure in the boiler when the steam gauge indicates 15 lbs. pressure is 15 lbs. above the pressure of the air outside, and is (nearly) 30 lbs., actual or absolute pressure above zero or no pressure.

WEIGHT OF FLAT ROLLED IRON PER LINEAL FOOT.

(*Continued.*)

Thickness in Inches.	11″	11¼″	11½″	11¾″	12″	12¼″	12½″	12¾″
1/16	2.29	2.34	2.40	2.45	2.50	2.55	2.60	2.66
1/8	4.58	4.69	4.79	4.90	5.00	5.10	5.21	5.31
3/16	6.88	7.03	7.19	7.34	7.50	7.66	7.81	7.97
1/4	9.17	9.38	9.58	9.79	10.00	10.21	10.42	10.63
5/16	11.46	11.72	11.98	12.24	12.50	12.76	12.02	13.28
3/8	13.75	14.06	14.38	14.69	15.00	15.31	15.63	15.94
7/16	16.04	16.41	16.77	17.14	17.50	17.86	18.23	18.59
1/2	18.33	18.75	19.17	19.58	20.00	20.42	20.83	21.25
9/16	20.63	21.09	21.56	22.03	22.50	22.97	23.44	23.91
5/8	22.92	23.44	23.96	24.48	25.00	25.52	26.04	26.56
11/16	25.21	25.78	26.35	26.93	27.50	28.07	28.65	29.22
3/4	27.50	28.13	28.75	29.38	30.00	30.63	31.25	31.88
13/16	29.79	30.47	31.15	31.82	32.50	33.18	33.85	34.53
7/8	32.08	32.81	33.54	34.27	35.00	35.73	36.46	37.19
15/16	34.38	35.16	35.94	36.72	37.50	38.28	39.06	39.84
1	36.67	37.50	38.33	39.17	40.00	40.83	41.67	42.50
1 1/16	38.96	39 84	40.73	41.61	42.50	43.39	44.27	45.16
1 1/8	41.25	42.19	43.13	44.06	45.00	45.94	46.88	47.81
1 3/16	43.54	44.53	45.52	46.51	47.50	48.49	49.48	53.47
1 1/4	45.83	46.88	47.92	48.96	50.00	51.04	52.08	50.13
1 5/16	48.13	49.22	50.31	51.41	52.50	53.59	54.69	55.78
1 3/8	50.42	51.56	52.71	53.85	55.00	56.15	57.29	58.44
1 7/16	52.71	53.91	55.10	56.30	57.50	58.70	59.90	61.09
1 1/2	55.00	56.25	57.50	58.75	60.00	61.25	62.50	63.75
1 9/16	57.29	58.59	59.90	61.20	62.50	63.80	65.10	66.41
1 5/8	59.58	60.94	62.29	63 65	65.00	66.35	67.71	69.06
1 11/16	61.88	63.28	64.69	66 09	67.50	68.91	70.31	71.72
1 3/4	64.17	65.63	67.08	68.54	70.00	71.46	72.92	74.38
1 13/16	66.46	67.97	69.48	70.99	72.50	74.01	75.52	77.03
1 7/8	68.75	70.31	71.88	73.44	75.00	76.56	78.13	79.69
1 15/16	71.04	72.66	74.27	75.89	77.50	79.11	80.73	82.34
2	73.33	75.00	76.67	78.33	80.00	81.67	83.33	85.00

The weights for 12″ width are repeated on each page to facilitate making the additions necessary to obtain the weights of plates wider than 12″. Thus to find the weight of 15¾″ × ⅞″, add the weight to be found in the same line for 3¾ × ⅞ and 12 × ⅞ = 9.48 + 35.00 = 44.48 lbs.

If a rule be required to find the whole number of teeth a milling cutter should have, use this one: If the teeth are to be ¼ inch apart on the circumference, multiply the diameter of the cutter by 12; if 5/16 apart, multiply by 10; if ⅜ apart, by 8; if 7/16, multiply by 7; and, if ½-inch, multiply by 6. This rule gives the space as stated quite as close to accuracy as is necessary, for this purpose and will save time if it is remembered.

AREAS OF FLAT ROLLED IRON.

For thicknesses from $\frac{1}{16}$ in. to 2 in. and Widths from 1 in. to 12¾ in.

Thickness in inches.	1″	1¼″	1½″	1¾″	2″	2¼″	2½″	2¾″	12″
$\frac{1}{16}$	.063	.078	.094	.109	.125	.141	.156	.172	.750
$\frac{1}{8}$	.125	.156	.188	.219	.250	.281	.313	.344	1.50
$\frac{3}{16}$	.188	.234	.281	.328	.375	.422	.469	.516	2.25
$\frac{1}{4}$	.250	.313	.375	.438	.500	.563	.625	.688	3.00
$\frac{5}{16}$	.313	.391	.469	.547	.625	.703	.781	.859	3.75
$\frac{3}{8}$	.375	.469	.563	.656	.750	.844	.938	1.03	4.50
$\frac{7}{16}$	.438	.547	.656	.766	.875	.984	1.09	1.20	5.25
$\frac{1}{2}$	.500	.625	.750	.875	1.00	1.13	1.25	1.38	6.00
$\frac{9}{16}$	.563	.703	.844	.984	1.13	1.27	1.41	1.55	6.75
$\frac{5}{8}$	.625	.781	.938	1.09	1 25	1.41	1.56	1.72	7.50
$\frac{11}{16}$	.688	.859	1.03	1.20	1 38	1.55	1.72	1.89	8.25
$\frac{3}{4}$	.750	.938	1.13	1.31	1 50	1.69	1.88	2.06	9.00
$\frac{13}{16}$	.813	1.02	1.22	1.42	1.63	1.83	2.03	2.23	9.75
$\frac{7}{8}$	.875	1.09	1.31	1.53	1.75	1.97	2.19	2.41	10.50
$\frac{15}{16}$	.938	1.17	1.41	1.64	1.88	2.11	2.34	2.58	11.25
1	1.00	1.25	1.50	1.75	2.00	2.25	2.50	2.75	12.00
$1\frac{1}{16}$	1.06	1.33	1 59	1.86	2.13	2.39	2.66	2.92	12.75
$1\frac{1}{8}$	1.13	1.41	1.69	1.97	2.25	2.53	2.81	3.09	13.50
$1\frac{3}{16}$	1.19	1.48	1.78	2.08	2.38	2.67	2.97	3.27	14.25
$1\frac{1}{4}$	1.25	1.56	1.88	2.19	2.50	2.81	3.13	3.44	15.00
$1\frac{5}{16}$	1.31	1.64	1.97	2.30	2.63	2.95	3.28	3.61	15.75
$1\frac{3}{8}$	1.38	1.72	2.06	2.41	2.75	3.09	3.44	3.78	16.50
$1\frac{7}{16}$	1.44	1.80	2.16	2.52	2.88	3.23	3.59	3.95	17.25
$1\frac{1}{2}$	1.50	1.88	2.25	2.63	3.00	3.38	3.75	4.13	18.00
$1\frac{9}{16}$	1.56	1.95	2.34	2.73	3.13	3.52	3.91	4.30	18.75
$1\frac{5}{8}$	1.63	2.03	2.44	2.84	3.25	3.66	4.06	4.47	19.50
$1\frac{11}{16}$	1.69	2.11	2.53	2.95	3.38	3.80	4.22	4.64	20.25
$1\frac{3}{4}$	1.75	2.19	2.63	3.06	3.50	3.94	4.38	4.81	21.00
$1\frac{13}{16}$	1.81	2.27	2.72	3.17	3.63	4.08	4 53	4.98	21.75
$1\frac{7}{8}$	1.88	2.34	2.81	3.28	3.75	4.22	4 69	5.16	22.50
$1\frac{15}{16}$	1.94	2.42	2.91	3.39	3.88	4.36	4.84	5.33	23.25
2	2.00	2.50	3.00	3.50	4.00	4.50	5.00	5.50	24.00

It is not good practice to locate the pump between the boiler and heater, for, in this case, it has to work water at a temperature at, or near 212 deg. Fahr., and it is apt to "kick" or stop working. This is caused by the water vaporizing in the pump barrel, which destroys the vacuum. The same is liable to occur if the pump has to lift hot water even for a short distance, unless the pump is lower than the source of the hot water.

AREAS OF FLAT ROLLED IRON.

(*Continued.*)

Thickness in Inches.	3″	3¼″	3½″	3¾″	4″	4¼″	4½″	4¾″	12″
1/16	.188	.203	.219	.234	.250	.266	.281	.297	.750
1/8	.375	.406	.438	.469	.500	.531	.563	.594	1.50
3/16	.563	.609	.656	.703	.750	.797	.844	.891	2.25
1/4	.750	.813	.875	.938	1.00	1.06	1.13	1.19	3.00
5/16	.938	1.02	1.09	1.17	1.25	1.33	1.41	1.48	3.75
3/8	1.13	1.22	1.31	1.41	1.50	1.59	1.69	1.78	4.50
7/16	1.31	1.42	1.53	1.64	1.75	1.86	1.97	2.08	5.25
1/2	1.50	1.63	1.75	1.88	2.00	2.13	2.25	2.38	6.00
9/16	1.69	1.83	1.97	2.11	2.25	2.39	2.53	2.67	6.75
5/8	1.88	2.03	2.19	2.34	2.50	2.66	2.81	2.97	7.50
11/16	2 06	2.23	2.41	2.58	2.75	2.92	3.09	3.27	8.25
3/4	2.25	2.44	2.63	2.81	3.00	3.19	3.38	3.56	9.00
13/16	2.44	2.64	2.84	3.05	3.25	3.45	3.66	3.86	9.75
7/8	2 63	2.84	3-06	3.28	3.50	3.72	3.94	4.16	10.50
15/16	2.81	3.05	3 28	3.52	3.75	3.98	4.22	4.45	11.25
1	3.00	3 25	3.50	3.75	4.00	4.25	4.50	4.75	12.00
1 1/16	3.19	3.45	3.72	3.98	4.25	4.52	4.78	5.05	12.75
1 1/8	3.38	3 66	3.94	4.22	4.50	4.78	5.06	5.34	13.50
1 3/16	3.56	3.86	4.16	4.45	4.75	5.05	5.34	5.64	14.25
1 1/4	3.75	4.06	4.38	4.69	5.00	5.31	5.63	5.94	15.00
1 5/16	3.94	4.27	4.59	4.92	5.25	5.58	5.91	6.23	15.75
1 3/8	4.13	4.47	4.81	5.16	5.50	5.84	6.19	6.53	16.50
1 7/16	4.31	4.67	5.03	5.39	5.75	6.11	6.47	6.83	17.25
1 1/2	4 50	4 88	5.25	5.63	6.00	6.38	6.75	7.13	18.00
1 9/16	4.69	5.08	5.47	5.86	6.25	6.64	7.03	7.42	18.75
1 5/8	4.88	5 28	5.69	6.09	6.50	6.91	7.31	7.72	19.50
1 11/16	5.06	5 48	5.91	6.33	6.75	7.17	7.59	8.02	20.25
1 3/4	5.25	5.69	6.13	6.56	7.00	7.44	7.88	8.31	21.00
1 13/16	5.44	5.89	6 34	6.80	7.25	7.70	8.16	8.61	21.75
1 7/8	5.63	6.09	6.56	7.03	7.50	7.97	8.44	8.91	22.50
1 15/16	5.81	6.30	6.78	7.27	7.75	8.23	8.72	9.20	23.25
2	6.00	6 50	7.00	7.50	8.00	8.50	9.00	9.50	24.00

Velocity is speed or rate of motion, and is the second element in dynamics.

Time implies a continuous perception, recognized as duration, or that measured by a clock, and is the third element in dynamics.

AREAS OF FLAT ROLLED IRON.

(*Continued.*)

Thickness in inches.	5″	5¼″	5½″	5¾″	6″	6¼″	6½″	6¾″	12″
1/16	.313	.328	.344	.359	.375	.391	.406	.422	.750
1/8	.625	.656	.688	.719	.750	.781	.813	.844	1.50
3/16	.938	.984	1.03	1.08	1.13	1.17	1.22	1.27	2.25
1/4	1.25	1.31	1.38	1.44	1.50	1.56	1.63	1.69	3.00
5/16	1.56	1.64	1.72	1.80	1.88	1.95	2.03	2.11	3.75
3/8	1.88	1.97	2.06	2.16	2.25	2.34	2.44	2.53	4.50
7/16	2.19	2.30	2.41	2.52	2.63	2.73	2.84	2.95	5.25
1/2	2.50	2.63	2.75	2.88	3.00	3.13	3.25	3.38	6.00
9/16	2.81	2.95	3.09	3.23	3.38	3.52	3.66	3.80	6.75
5/8	3.13	3.28	3.44	3.59	3.75	3.91	4.06	4.22	7.50
11/16	3.44	3.61	3.78	3.95	4.13	4.30	4.47	4.64	8.25
3/4	3.75	3.94	4.13	4.31	4.50	4.69	4.88	5.06	9.00
13/16	4.06	4.27	4.47	4.67	4.88	5.08	5.28	5.48	9.75
7/8	4.38	4.59	4.81	5.03	5.25	5.47	5.69	5.91	10.50
15/16	4.69	4.92	5.16	5.39	5.63	5.86	6.09	6.33	11.25
1	5.00	5.25	5.50	5.75	6.00	6.25	6.50	6.75	12.00
1 1/16	5.31	5.58	5.84	6.11	6.38	6.64	6.91	7.17	12.75
1 1/8	5.63	5.91	6.19	6.47	6.75	7.03	7.31	7.59	13.50
1 3/16	5.94	6.23	6.53	6.83	7.13	7.42	7.72	8.02	14.25
1 1/4	6.25	6.56	6 88	7.19	7 50	7.81	8.13	8.44	15.00
1 5/16	6.56	6.89	7.22	7.55	7.88	8.20	8.53	8.86	15.75
1 3/8	6.88	7.22	7.56	7.91	8.25	8.59	8.94	9.28	16.50
1 7/16	7.19	7.55	7.91	8.27	8.63	8.98	9.34	9.70	17.25
1 1/2	7.50	7.88	8.25	8.63	9.00	9.38	9.75	10.13	18.00
1 9/16	7.81	8.20	8.59	8.98	9.38	9.77	10.16	10.55	18.75
1 5/8	8.13	8.53	8.94	9.34	9.75	10.16	10.56	10.97	19.50
1 11/16	8.44	8.86	9.28	9.70	10.13	10.55	10.97	11.39	20.25
1 3/4	8.75	9.19	9.63	10.06	10.50	10.94	11.38	11.81	21.00
1 13/16	9.06	9.52	9.97	10.42	10.88	11.33	11.78	12.23	21.75
1 7/8	9.38	9.84	10.31	10.78	11.25	11.72	12.19	12.66	22.50
1 15/16	9.69	10.17	10.66	11.14	11.63	12.11	12.59	13.08	23.25
2	10.00	10.50	11.00	11.50	12.00	12.50	13.00	13.50	24.00

The lead of a valve is the width of the steam induction port-opening at the instant the piston commences its stroke; and the valve lead, or amount of the port-opening, is made great enough to supply full pressure of steam into the cylinder to start the piston before it commences its stroke. By increasing the lap and lead of the valve the steam is cut off quicker and the exhaust closed quicker, producing greater steam expansion and compression, which is found in locomotive and quick running engines to be the most efficient use of the steam.

AREAS OF FLAT ROLLED IRON.

(*Continued.*)

Thickness in Inches.	7″	7¼″	7½″	7¾″	8″	8¼″	8½″	8¾″	12″
1/16	.438	.453	.469	.484	.500	.516	.531	.547	.750
1/8	.875	.906	.938	.969	1.00	1.03	1.06	1.09	1.50
3/16	1.31	1.36	1.41	1.45	1.50	1.55	1.59	1.64	2.25
¼	1.75	1.81	1.88	1.94	2.00	2.06	2.13	2.19	3.00
5/16	2.19	2.27	2.34	2.42	2.50	2.58	2.66	2.73	3.75
⅜	2.63	2.72	2.81	2.91	3.00	3.09	3.19	3.28	4.50
7/16	3.06	3.17	3.28	3 39	3.50	3.61	3.72	3.83	5.25
½	3.50	3.63	3.75	3.88	4 00	4.13	4.25	4.38	6.00
9/16	3.94	4.08	4.22	4.36	4 50	4.64	4.78	4.92	6.75
5/8	4.38	4 53	4.69	4.84	5.00	5.16	5.31	5.47	7.50
11/16	4.81	4.98	5.16	5.33	5.50	5.67	5.84	6.02	8.25
¾	5.25	5.44	5.63	5.81	6.00	6.19	6.38	6 56	9.00
13/16	5.69	5.89	6.09	6.30	6.50	6.70	6.91	7.11	9.75
⅞	6.13	6.34	6.56	6.78	7.00	7.22	7.44	7.66	10.50
15/16	6.56	6.80	7.03	7.27	7.50	7.73	7.97	8.20	11.25
1	7.00	7.25	7.50	7.75	8.00	8.25	8.50	8.75	12.00
1 1/16	7.44	7.70	7.97	8.23	8.50	8.77	9.03	9.30	12.75
1⅛	7.88	8.16	8.44	8.72	9 00	9.28	9.56	9.84	13.50
1 3/16	8.31	8.61	8.91	9.20	9.50	9.80	10.09	10.39	14.25
1¼	8.75	9.06	9.38	9.69	10.00	10.31	10.63	10.94	15.00
1 5/16	9.19	9.52	9.84	10.17	10.50	10.83	11.16	11.48	15.75
1⅜	9.63	9.97	10.31	10.66	11.00	11.34	11.69	12.03	16.50
1 7/16	10.06	10.42	10.78	11.14	11.50	11.86	12.22	12.58	17.25
1½	10.50	10.88	11 25	11.63	12.00	12.38	12.75	13.13	18.00
1 9/16	10.94	11.33	11.72	12.11	12.50	12.89	13.28	13.67	18.75
1⅝	11.38	11.78	12.19	12.59	13.00	13.41	13.81	14.22	19.50
1 11/16	11.81	12.23	12.66	13.08	13.50	13.92	14.34	14.77	20.25
1¾	12.25	12.69	13.13	13.56	14.00	14.44	14.88	15.31	21.00
1 13/16	12.69	13.14	13.59	14.05	14.50	14.95	15.41	15.86	21.75
1⅞	13.13	13.59	14.06	14.53	15.00	15.47	15.94	16.41	22.50
1 15/16	13.56	14.05	14.53	15.02	15.50	15.98	16.47	16.95	23.25
2	14.00	14.50	15.00	15.50	16 00	16.50	17.00	17.50	24.00

The pressure should always come against the bottom of a globe valve pressing the valve against the screw. The reasons are that when the valve is closed, the steam does not exert a pressure upon the packing, or tend to burn it out. It may also be renewed with a pressure upon the valve. Steam will also pass more freely through valve in entering from the under side, besides the valve is more safe, and will wear much longer.

AREAS OF FLAT ROLLED IRON.

(*Continued.*)

Thickness in Inches.	9″	9¼″	9½″	9¾″	10″	10¼″	10½″	10¾″	12″
1/16	.563	.578	.594	.609	.625	.641	.656	.672	.75
1/8	1.13	1.16	1.19	1.22	1.25	1.28	1.31	1.34	1 50
3/16	1.69	1.73	1.78	1.83	1.88	1.92	1.97	2.02	2.25
1/4	2.25	2.31	2.38	2.44	2.50	2.56	2.63	2.69	3.00
5/16	2.81	2.89	2.97	3.05	3.13	3.20	3.28	3.36	3.75
3/8	3.38	3.47	3.56	3.66	3.75	3.84	3.94	4.03	4.50
7/16	3.94	4.05	4.16	4.27	4.38	4.48	4.59	4.70	5.25
1/2	4.50	4.63	4.75	4.88	5.00	5.13	5.25	5.38	6.00
9/16	5.06	5.20	5.34	5.48	5.63	5.77	5.91	6.05	6.75
5/8	5.63	5.78	5.94	6.09	6.25	6.41	6.56	6.72	7.50
11/16	6.19	6.36	6.53	6.70	6.88	7.05	7.22	7.39	8.25
3/4	6.75	6.94	7.13	7.31	7.50	7.69	7.88	8.06	9.00
13/16	7.31	7.52	7.72	7.92	8.13	8.33	8.53	8.73	9.75
7/8	7.88	8.09	8.31	8.53	8.75	8.97	9.19	9.41	10.50
15/16	8.44	8.67	8.91	9.14	9.38	9.61	9.84	10.08	11.25
1	9.00	9.25	9.50	9.75	10.00	10.25	10.50	10.75	12.00
1 1/16	9.56	9.83	10.09	10.36	10.63	10.89	11.16	11.42	12.75
1 1/8	10.13	10.41	10.69	10.97	11.25	11.53	11.81	12.09	13.50
1 3/16	10.69	10.98	11.28	11.58	11.88	12.17	12.47	12.77	14.25
1 1/4	11.25	11.56	11.88	12.19	12.50	12.81	13.13	13.44	15.00
1 5/16	11.81	12.14	12.47	12.80	13.13	13.45	13.78	14.11	15.75
1 3/8	12.38	12.72	13.06	13.41	13.75	14.09	14.44	14.78	16.50
1 7/16	12.94	13.30	13.66	14.02	14.38	14.73	15.09	15.45	17.25
1 1/2	13.50	13.88	14.25	14.63	15.00	15.38	15.75	16.13	18.00
1 9/16	14.06	14.43	14.84	15.23	15.63	16.02	16.41	16.80	18.75
1 5/8	14.63	15.03	15.44	15.84	16.25	16.66	17.06	17.47	19.50
1 11/16	15.19	15.61	16.03	16.45	16.88	17.30	17.72	18.14	20.25
1 3/4	15.75	16.19	16.63	17.06	17.50	17.94	18.38	18.81	21.00
1 13/16	16.31	16.77	17.22	17.67	18.13	18.58	19.03	19.48	21.75
1 7/8	16.88	17.34	17.81	18.28	18.75	19.22	19.69	20.16	22.50
1 15/16	17.44	17.92	18.41	18.89	19.38	19.86	20.34	20.83	23.25
2	18.00	18.50	19.00	19.50	20.00	20.50	21.00	21.50	24.00

Iridium is many times harder than the hardest steel, and will not rust or corrode in any atmosphere or fluid. It defies the file and resists all acids. The only means of cutting iridium is by friction with a soft metal wheel charged with diamond dust or fine corundum.

AREAS OF FLAT ROLLED IRON.

(*Continued.*)

Thickness in Inches.	11″	11¼″	11½″	11¾″	12″	12¼″	12½″	12¾″
1/16	.688	.703	.719	.734	.750	.766	.781	.797
1/8	1.38	1.41	1.44	1.47	1.50	1.53	1.56	1.59
3/16	2.06	2.11	2.16	2.20	2.25	2 30	2.34	2.39
1/4	2.75	2.81	2.88	2.94	3.00	3.06	3.13	3.19
5/16	3.44	3.52	3.59	3.67	3.75	3.83	3.91	3.98
3/8	4.13	4.22	4.31	4.41	4.50	4.59	4.69	4.78
7/16	4.81	4.92	5.03	5.14	5.25	5.36	5.47	5.58
1/2	5.50	5.63	5.75	5.88	6.00	6.13	6.25	6.38
9/16	6.19	6.33	6.47	6.61	6.75	6.89	7.03	7.17
5/8	6.88	7.03	7.19	7.34	7.50	7.66	7.81	7.97
11/16	7.26	7.73	7.91	8.08	8.25	8.42	8.59	8.77
3/4	8.55	8.44	8.63	8.81	9.00	9.19	9.38	9.56
13/16	8 94	9.14	9.34	9.55	9.75	9.95	10.16	10.36
7/8	9.63	9.84	10.06	10.28	10.50	10.72	10.94	11.16
15/16	10.31	10.55	10.78	11.02	11.25	11.48	11.72	11.95
1	11.00	11.25	11.50	11.75	12.00	12.25	12.50	12.75
1 1/16	11.69	11.95	12.22	12.48	12.75	13.02	13.28	13.55
1 1/8	12.38	12.66	12.94	13.22	13.50	13.78	14.06	14.34
1 3/16	13.06	13.36	13.66	13.95	14.25	14.55	14.84	15.14
1 1/4	13.75	14.06	14.38	14.69	15.00	15.31	15.63	15.94
1 5/16	14.44	14.77	15.09	15.42	15.75	16.08	16.41	16.73
1 3/8	15.13	15.47	15.81	16.16	16.50	16.84	17.19	17.53
1 7/16	15.81	16.17	16.53	16.89	17.25	17.61	17.97	18.33
1 1/2	16.50	16.88	17.25	17.63	18.00	18.38	18.75	19.13
1 9/16	17.19	17.58	17.97	18.36	18.75	19.14	19.53	19.92
1 5/8	17.88	18.28	18.69	19.09	19.50	19.91	20.31	20.72
1 11/16	18.56	18.98	19.41	19.83	20.25	20.67	21.09	21.52
1 3/4	19.25	19.69	20.13	20.56	21.00	21.44	21.88	22.31
1 13/16	19.94	20.39	20.84	21.30	21.75	22.20	22.66	23.11
1 7/8	20.63	21.09	21.56	22.03	22.50	22.97	23.44	23.91
1 15/16	21.31	21.80	22.28	22.57	23.25	23.73	24.22	24 70
2	22.00	22.50	23.00	23.50	24.00	24.50	25.00	25 50

The areas for 12″ width are repeated on each page to facilitate making the additions necessary to obtain the areas of plates wider than 12″. Thus to find the area of 15¾″ × 7/8″, add the areas to be found in the same line for 3¼ × 7/8 and 12 × 7/8 = 2.84 + 10.50 = 13.34 square inches.

The best way to enlarge a shaft, when the bearing is close to the end, is to drill a hole in the end of the shaft about one-third as large as the shaft, fill the hole with lard oil to within half an inch of the end, then plug it tight with a steel plug. Heat it slowly until it gets red hot—then let it cool slowly, then dress the bearing down to fit.

WEIGHT AND AREAS OF SQUARE AND ROUND BARS OF WROUGHT IRON, AND CIRCUMFERENCES OF ROUND BARS.

ONE CUBIC FOOT WEIGHING 480 LBS.

Thickness or Diam. in inches.	Weight of Sqr. Bar one ft. long	Weight of Round Bar one ft. long.	Area of Sqr. Bar in sq. inches.	Area of Round Bar in sq. inches.	Cir. of Round bar in inches.
0					
1/16	.013	.010	.0039	.0031	.1963
1/8	.052	.041	.0156	.0123	.3927
3/16	.117	.092	.0352	.0276	.5890
1/4	.208	.164	.0625	.0491	.7854
5/16	.326	.256	.0977	.0767	.9817
3/8	.469	.368	.1406	.1104	1.1781
7/16	.638	.501	.1914	.1503	1.3744
1/2	.833	.654	.2500	.1963	1.5708
9/16	1.055	.828	.3164	.2485	1.7671
5/8	1.302	1.023	.3906	.3068	1.9635
11/16	1.576	1.237	.4727	.3712	2.1598
3/4	1.875	1.473	.5625	.4418	2.3562
13/16	2.201	1.728	.6602	.5185	2.5525
7/8	2.552	2.004	.7656	.6013	2.7489
15/16	2.930	2.301	.8789	.6903	2.9452
1	3.333	2.618	1.0000	.7854	3.1416
1/16	3.763	2.955	1.1289	.8866	3.3379
1/8	4.219	3.313	1.2656	.9940	3.5343
3/16	4.701	3.692	1.4102	1.1075	3.7306
1/4	5.208	4.091	1.5625	1.2272	3.9270
5/16	5.742	4.510	1.7227	1.3530	4.1233
3/8	6.302	4.950	1.8906	1.4849	4.3197
7/16	6.888	5.410	2.0664	1.6230	4.5160
1/2	7.500	5.890	2.2500	1.7671	4.7124
9/16	8.138	6.392	2.4414	1.9175	4.9087
5/8	8.802	6.913	2.6406	2.0739	5.1051
11/16	9.492	7.455	2.8477	2.2365	5.3014
3/4	10.21	8.018	3.0625	2.4053	5.4978
13/16	10 95	8.601	3.2852	2.5802	5.6941
7/8	11 72	9.204	3.5156	2.7612	5.8905
15/16	12.51	9.828	3.7539	2.9483	6.0868

Work is the product obtained by multiplying together the three simple elements, *force*, *velocity* and *time*.

SQUARE AND ROUND BARS.

(*Continued.*)

Thickness or Diam. in inches.	Weight of Sqr. Bar one ft. long	Weight of Round bar one ft. long	Area of Square Bar in sq. inches.	Area of Round Bar in sq. inches.	Circumference of Round Bar in inches.
2	13.33	10.47	4.0000	3.1416	6.2832
1/16	14.18	11.14	4.2539	3.3410	6.4795
1/8	15.05	11.82	4.5156	3.5466	6.6759
3/16	15.95	12.53	4.7852	3.7583	6.8722
1/4	16.88	13.25	5.0625	3.9761	7.0686
5/16	17.83	14.00	5.3477	4.2000	7.2649
3/8	18.80	14.77	5.6406	4.4301	7.4613
7/16	19.80	15.55	5.9414	4.6664	7.6576
1/2	20.83	16.36	6.2500	4.9087	7.8540
9/16	21.89	17.19	6.5664	5.1572	8.0503
5/8	22.97	18.04	6.8906	5.4119	8.2467
11/16	24.08	18.91	7.2227	5.6727	8.4430
3/4	25.21	19.80	7.5625	5.9396	8.6394
13/16	26.37	20.71	7.9102	6.2126	8.8357
7/8	27.55	21.64	8.2656	6.4918	9.0321
15/16	28.76	22.59	8.6289	6.7771	9.2284
3	30.00	23.56	9.0000	7.0686	9.4248
1/16	31.26	24.55	9.3789	7.3662	9.6211
1/8	32.55	25.57	9.7656	7.6699	9.8175
3/16	33.87	26.60	10.160	7.9798	10.014
1/4	35.21	27.65	10.563	8.2958	10.210
5/16	36.58	28.73	10.973	8.6179	10.407
3/8	37.97	29.82	11.391	8.9462	10.603
7/16	39.39	30.94	11.816	9.2806	10.799
1/2	40.83	32.07	12.250	9.6211	10.996
9/16	42.30	33.23	12.691	9.9678	11.192
5/8	43.80	34.40	13.141	10.321	11.388
11/16	45.33	35.60	13.598	10.680	11.585
3/4	46.88	36.82	14.063	11.045	11.781
13/16	48.45	38.05	14.535	11.416	11.977
7/8	50.05	39.31	15.016	11.793	12.174
15/16	51.68	40.59	15.504	12.177	12.370

Dynamics is the science of that branch of mechanics which treats of *force in motion*, *power* and *work*. It comprehends the action of all kinds of machinery, manual and animal labor, in the transformation of physical work.

SQUARE AND ROUND BARS.

(*Continued.*)

Thickness or Diam. in inches.	Weight of Sqr. Bar one ft. long	Weight of Round Bar one ft. long.	Area of Sqr. Bar in sq. inches.	Area of Round Bar in sq. inches.	Cir. of Round Bar in inches.
4	53.33	41.89	16.000	12.566	12.566
1/16	55.01	43.21	16.504	12.962	12.763
1/8	56.72	44.55	17.016	13.364	12.959
3/16	58.45	45.91	17.535	13.772	13.155
1/4	60.21	47.29	18.063	14.186	13.352
5/16	61.99	48 69	18.598	14.607	13.548
3/8	63.80	50.11	19.141	15.033	13.744
7/16	65.64	51.55	19.691	15.466	13.941
1/2	67.50	53.01	20.250	15.904	14.137
9/16	69.39	54.50	20.816	16.349	14.334
5/8	71.30	56.00	21.391	16.800	14.530
11/16	73.24	57.52	21.973	17.257	14.726
3/4	75.21	59.07	22.563	17.721	14.923
13/16	77.20	60.63	23.160	18.190	15.119
7/8	79.22	62.22	23.766	18.665	15.315
15/16	81.26	63.82	24.379	19.147	15.512
5	83.33	65.45	25.000	19.635	15.708
1/16	85.43	67.10	25.629	20.129	15.904
1/8	87.55	68.76	26.266	20.629	16.101
3/16	89.70	70.45	26.910	21.135	16.297
1/4	91.88	72.16	27.563	21.648	16.493
5/16	94.08	73.89	28.223	22.166	16.690
3/8	96.30	75.64	28.891	22.691	16.886
7/16	98.55	77.40	29.566	23.221	17.082
1/2	100.8	79.19	30.250	23.758	17.279
9/16	103.1	81.00	30.941	24.301	17.475
5/8	105.5	82.83	31.641	24.850	17.671
11/16	107.8	84.69	32.348	25.406	17.868
3/4	110.2	86.56	33.063	25.967	18.064
13/16	112.6	88.45	33.785	26.535	18.261
7/8	115.1	90.36	34.516	27.109	18.457
15/16	117.5	92.29	35.254	27.688	18.653

Function is any compound result or product of two or more different elements. A function is resolved by dividing it with one or more of its elements.

SQUARE AND ROUND BARS.

(Continued.)

Thickness or Diam. in inches.	Weight of Sqr. Bar one ft. long	Weight of Round Bar one ft. long	Area of Square Bar in sq. inches.	Area of Round Bar in sq. inches.	Circumference of Round Bar in inches.
6	120.0	94.25	36.000	28.274	18.850
1/16	122.5	96.22	36.754	28.866	19.046
1/8	125.1	98.22	37.516	29.465	19.242
3/16	127.6	100.2	38.285	30.069	19.439
1/4	130.2	102.3	39.063	30.680	19.635
5/16	132.8	104.3	39.848	31.296	19.831
3/8	135.5	106.4	40.641	31.919	20.028
7/16	138.1	108.5	41.441	32.548	20.224
1/2	140.8	110.6	42.250	33.183	20.420
9/16	143.6	112.7	43.066	33.824	20.617
5/8	146.3	114.9	43.891	34.472	20.813
11/16	149.1	117.1	44.723	35.125	21.009
3/4	151.9	119.3	45.563	35.785	21.206
13/16	154.7	121.5	46.410	36.450	21.402
7/8	157.6	123.7	47.266	37.122	21.598
15/16	160.4	126.0	48.129	37.800	21.795
7	163.3	128.3	49.000	38.485	21.991
1/16	166.3	130.6	49.879	39.175	22.187
1/8	169.2	132.9	50.766	39.871	22.384
3/16	172.2	135.2	51.660	40.574	22.580
1/4	175.2	137.6	52.563	41.282	22.777
5/16	178.2	140.0	53.473	41.997	22.973
3/8	181.3	142.4	54.391	42.718	23.169
7/16	184.4	144.8	55.316	43.445	23.366
1/2	187.5	147.3	56.250	44.179	23.562
9/16	190.6	149.7	57.191	44.918	23.758
5/8	193.8	152.2	58.141	45.664	23.955
11/16	197.0	154.7	59.098	46.415	24.151
3/4	200.2	157.2	60.063	47.173	24.347
13/16	203.5	159.8	61.035	47.937	24.544
7/8	206.7	162.4	62.016	48.707	24.740
15/16	210.0	164.9	63.004	49.483	24.936

Element is an essential principle which cannot be resolved into two or more different principles. The simple physical elements of dynamics are *force*, *velocity* and *time*, and the functions of these elements are *power*, *space* and *work*.

SQUARE AND ROUND BARS.

(*Continued.*)

Thickness or Diam. in inches.	Weight of Sqr. Bar one ft. long	Weight of Round Bar one ft. long.	Area of Sq. Bar in sq. inches.	Area of Round Bar in sq. inches.	Cir. of Round Bar in inches.
8	213.3	167.6	64.000	50.265	25.133
1/16	216.7	170.2	65.004	51.054	25.329
1/8	220.1	172.8	66.016	51.849	25.525
3/16	223.5	175.5	67.035	52.649	25.722
1/4	226.9	178.2	68.063	53.456	25.918
5/16	230.3	180.9	69.098	54.269	26.114
3/8	233.8	183.6	70.141	55.088	26.311
7/16	237.3	186.4	71.191	55.914	26.507
1/2	240.8	189.2	72.250	56.745	26.704
9/16	244.4	191.9	73.316	57.583	26.900
5/8	248.0	194.8	74.391	58.426	27.096
11/16	251.6	197.6	75.473	59.276	27.293
3/4	255.2	200.4	76.563	60 132	27.489
13/16	258.9	203.3	77.660	60 994	27.685
7/8	262.6	206.2	78.766	61.862	27.882
15/16	266.3	209.1	79.879	62.737	28.078
9	270.0	212.1	81.000	63.617	28.274
1/16	273.8	215.0	82.129	64.504	28.471
1/8	277.6	218.0	83.266	65.397	28.667
3/16	281.4	221.0	84.410	66.296	28.863
1/4	285.2	224.0	85.563	67.201	29.060
5/16	289.1	227.0	86.723	68.112	29.256
3/8	293.0	230.1	87.891	69.029	29.452
7/16	296.9	233.2	89.066	69.953	29.649
1/2	300.8	236.3	90.250	70.882	29.845
9/16	304.8	239.4	91.441	71.818	30.041
5/8	308.8	242.5	92.641	72.760	30.238
11/16	312.8	245.7	93.848	73.708	30.434
3/4	316.9	248.9	95.063	74.662	30.631
13/16	321.0	252.1	96.285	75.622	30.827
7/8	325.1	255.3	97.516	76.589	31.023
15/16	329.2	258.5	98.754	77.561	31.220

Force is any action which can be expressed simply by weight, and which can be realized only by an equal amount of reaction, and is the first element in dynamics.

SQUARE AND ROUND BARS.

(*Continued.*)

Thickness or Diam. in inches.	Weight of Sqr. Bar one ft. long	Weight of Round Bar one ft. long.	Area of Sq. Bar in sq. inches.	Area of Round Bar in sq. inches.	Cir. of Round Bar in inches.
10	333.3	261.8	100.00	78.540	31.416
1/16	337.5	265.1	101.25	79.525	31.612
1/8	341.7	268.4	102.52	80.516	31.809
3/16	346.0	271.7	103.79	81.513	32.005
1/4	350.2	275.1	105.06	82.516	32.201
5/16	354.5	278.4	106.35	83.525	32.398
3/8	358.8	281.8	107.64	84.541	32.594
7/16	363.1	285.2	108.94	85.562	32.790
1/2	367.5	288.6	110.25	86.590	32.987
9/16	371.9	292.1	111.57	87.624	33.183
5/8	376.3	295.5	112.89	88.664	33.379
11/16	380.7	299.0	114.22	89.710	33.576
3/4	385.2	302.5	115.56	90.763	33.772
13/16	389.7	306.1	116.91	91.821	33.968
7/8	394.2	309.6	118.27	92.886	34.165
15/16	398.8	313.2	119.63	93.956	34.361
11	403.3	316.8	121.00	95.033	34.558
1/16	407.9	320.4	122.38	96.116	34.754
1/8	412.6	324.0	123.77	97.205	34.950
2/16	417.2	327.7	125.16	98.301	35.147
1/4	421.9	331.3	126.56	99.402	35.343
5/16	426.6	335.0	127.97	100.51	35.539
3/8	431.3	338.7	129.39	101.62	35.736
7/16	436.1	342.5	130.82	102.74	35.932
1/2	440.8	346.2	132.25	103.87	36.128
9/16	445.6	350.0	133.69	105.00	36.325
5/8	450.5	353.8	135.14	106.14	36.521
11/16	455.3	357.6	136.60	107.28	36.717
3/4	460.2	361.4	138.06	108.43	36.914
13/16	465.1	365.3	139.54	109.59	37.110
7/8	470.1	369.2	141.02	110.75	37.306
15/16	475.0	373.1	142.50	111.92	37.503

The surface of a journal may be increased by adding to its length without increasing the friction or the power necessary to overcome it. Nor, will the *friction* be increased by adding to the diameter of a journal, but the power necessary to overcome this *friction* will certainly be increased.

Angle Irons.

Weights per Foot corresponding to thicknesses varying by $\frac{1}{16}''$, one Cubic Foot weighing 480 lbs.

SIZE INCHES.	$\frac{1}{8}''$	$\frac{3}{16}''$	$\frac{1}{4}''$	$\frac{5}{16}''$	$\frac{3}{8}''$	$\frac{7}{16}''$	$\frac{1}{2}''$	$\frac{9}{16}''$	$\frac{5}{8}''$	$\frac{11}{16}''$	$\frac{3}{4}''$	$\frac{13}{16}''$	$\frac{7}{8}''$
Equal Legs													
6 × 6	.....	.....	.....	.....	.....	.....	19.2	21.7	24.2	26.7	29.2	31.7	34.2
4 × 4	.....	.....	.....	.....	9.5	11.2	12.9	14.5	16.2	17.9	19.5	.....	.....
3½ × 3½	.....	.....	.....	.....	8.3	9.7	11.2	12.7	14.1	15.6	17.0	.....	.....
3¼ × 3¼	.....	.....	.....	.....	7.7	9.0	10.4	11.7	13.1	14.4	15.8	.....	.....
3 × 3	.....	.....	.....	5.9	7.2	8.4	9.7	10.9	12.2	.....	.....	.....	.....
2¾ × 2¾	.....	.....	.....	5.4	6.5	7.7	8.8	.....	.....	.....	.....	.....	.....
2½ × 2½	.....	.....	.....	4.9	5.9	7.0	8.0	.....	.....	.....	.....	.....	.....
2¼ × 2 ¼	.....	.....	3.5	4.5	5.4	6.4	7.3	.....	.....	.....	.....	.....	.....
2 × 2	.....	.....	3.1	4.0	4.8	5.6	.....	.....	.....	.....	.....	.....	.....
1¾ × 1¾	.....	2.1	2.8	3.5	4.3	5.0	.....	.....	.....	.....	.....	.....	.....
1½ × 1½	.....	1.8	2.4	3.0	3.6	.....	.....	.....	.....	.....	.....	.....	.....
1¼ × 1¼	1.0	1.5	2.0	.....	.....	.....	.....	.....	.....	.....	.....	.....	.....
1⅛ × 1⅛	0.9	1.4	1.8	.....	.....	.....	.....	.....	.....	.....	.....	.....	.....
1 × 1	0.8	1.2	1.6	.....	.....	.....	.....	.....	.....	.....	.....	.....	.....
¾ × ¾	0.6	0.9	.....	.....	.....	.....	.....	.....	.....	.....	.....	.....	.....
Unequal Legs													
6 × 4	.....	.....	.....	.....	.....	13.9	16.0	18.1	20.2	22.3	24.4	26.4	.....
5 × 4	.....	.....	.....	.....	10.8	12.7	14.5	16.4	18.3	20.2	22.0	.....	.....
5 × 3½	.....	.....	.....	.....	10.2	11.9	13.7	15.5	17.2	19.0	20.8	.....	.....
5 × 3	.....	.....	.....	.....	9.5	11.2	12.9	14.5	16.2	17.9	19.5	.....	.....
4 × 3½	.....	.....	.....	.....	8.9	10.5	12.0	13.6	15.2	16.7	18.3	.....	.....
4 × 3	.....	.....	.....	.....	8.3	9.7	11.2	12.7	14.1	15.6	17.0	.....	.....
3½ × 3	.....	.....	.....	.....	7.7	9.0	10.4	11.7	13.1	14.4	15.8	.....	.....
3¼ × 2	.....	.....	4.2	5.3	6.4	7.4	8.5	.....	.....	.....	.....	.....	.....
3 × 2½	.....	.....	4.4	5.5	6.7	7.8	9.0	.....	.....	.....	.....	.....	.....
3 × 2	.....	.....	4.0	5.0	6.0	7.1	8.1	.....	.....	.....	.....	.....	.....
2½ × 2	.....	.....	3.5	4.5	5.4	6.4	7.3	.....	.....	.....	.....	.....	.....
2 × 1⅜	.....	.....	2.6	3.3	4.0	.....	.....	.....	.....	.....	.....	.....	.....

Power is the produet of force and velocity; that is to say, a force multiplied by the velocity with which it is acting, is the power in operation. Power is the differential of work or any action which produces work, whether mental or physical. Power multiplied by the time of action is work—work divided by time is power.

T Irons.

SIZE, FLANGE BY STEM. INCHES.	WEIGHT PER FOOT. LBS.	AREA OF SECTION SQUARE INCHES.	SIZE, FLANGE BY STEM. INCHES.	WEIGHT PER FOOT. LBS.	AREA OF SECTION. SQUARE INCHES.
5 × 3	13	3.90	3 × 4	12¼	3.68
5 × 2½	10¼	3.08	3 × 3½	11¾	3.53
4½ × 3½	15	4.50	3 × 3	7.6	2.28
4 × 5	14	4.20	3 × 2½	6	1.80
4 × 4½	13½	4.05	2½ × 3	6½	1.95
4 × 4	12	3.60	2½ × 2¾	6.6	1.98
4 × 3	9¼	2.78	2½ × 2½	5.4	1.62
4 × 2½	7½	2.25	2½ × 1¼	3	0.90
4 × 2	6½	1.95			
3½ × 4	11¼	3.38			
3½ × 3½	10	3.00			
3½ × 3	9¼	2.78			

Star Irons.

SIZE. INCHES.	WEIGHT PER FT. LBS.	THICKNESS IN INCHES AT END AND ROOT OF FLANGE.	AREA. SQUARE INCH.
4 × 4	12	$\frac{3}{8}$ — $\frac{9}{16}$	3.60
3½ × 3½	9½	$\frac{3}{8}$ — $\frac{1}{2}$	2.85
3 × 3	7¼	$\frac{5}{16}$ — $\frac{15}{32}$	2.18
2½ × 2½	5½	$\frac{5}{16}$ — $\frac{13}{32}$	1.65
2 × 2	3¾	$\frac{1}{4}$ — $\frac{13}{32}$	1.13
1½ × 1½	2.3	$\frac{3}{16}$ — $\frac{5}{16}$	0.69

Weight of Tire Iron Per Set of 54 Feet.

1 x $\frac{3}{16}$ 34	1 x ¼ 45	1 x $\frac{5}{16}$ 56	1 x ⅜ 68	1⅛ x ¼ 50	1⅛ x $\frac{5}{16}$ 63	1⅛ x ⅜ 75	1⅛ x $\frac{7}{16}$ 83
1⅛ x ½ 101	1¼ x ¼ 56	1¼ x $\frac{5}{16}$ 70	1¼ x ⅜ 85	1¼ x $\frac{7}{16}$ 99	1¼ x ½ 113	1⅜ x ⅜ 93	1⅜ x ½ 124
1½ x ⅜ 101	1½ x ½ 135	1½ x ⅝ 169	1⅝ x ½ 148	1⅝ x ⅝ 183	1¾ x ½ 158	1¾ x ⅝ 197	1¾ x ¾ 236
2 x ½ 180	2 x ⅝ 225	2 x ¾ 270					

Wagon Box Iron.

WIDTH.	GAUGE.	WEIGHT PER FOOT.	NO. OF FEET IN TON OF 2,000 LBS.
¾	No. 10	.295	6,770
¾	No. 11	.264	7,575
¾	No. 12	.233	8,580
⅞	No, 10	.350	5,710
⅞	No. 11	.309	6,470
1	No. 10	.400	5,000

Half Round, Oval and Half Oval Iron.

SIZE. HALF ROUND.	SIZE—OVAL.	WEIGHT PER FOOT.	SIZE—HALF OVAL.	WEIGHT PER FOOT.
⅜	⅜ x 3/16	.186	⅜ x 3/32	.093
7/16	7/16 x 7/32	.253	7/16 x 7/64	.127
½	½ x ¼	.331	½ x ⅛	.166
⅝	⅝ x 5/16	.517	⅝ x 9/32	.259
¾	¾ x ⅜	.744	¾ x 3/16	.372
⅞	⅞ x 7/16	1.013	⅞ x 7/32	.507
1	1 x ½	1.323	1 x ¼	.662
1 ⅛	1⅛ x 9/16	1.624	1⅛ x 9/32	.812
1 ¼	1¼ x ⅝	2.067	1¼ x 5/16	1.034
1 ½	1½ x ¾	2.976	1½ x ⅜	1.488

All the above are estimated weights only.

Hoop and Scroll Iron. Number of Feet in a Bundle of Fifty-six Pounds.

HOOP IRON.			SCROLL IRON.		
Size.		Feet in Bundle.	Size.		Feet in Bundles.
Width.	Thick.		Width.	Thick.	
⅝ inches.	No. 21	815	½ inch.	No. 10	240
¾ "	" 20	630	⅝ "	" 16	430
⅞ "	" 19	450	⅝ "	" 14	347
1 "	" 18	360	⅝ "	" 10	190
1⅛ "	" 17	278	¾ "	" 16	360
1¼ "	" 16	217	¾ "	" 14	290
1½ "	" 15	160	¾ "	" 12	208
1¾ "	" 15	139	¾ "	" 10	160
2 "	" 14	110	⅞ "	" 16	310
			⅞ "	" 14	249
			⅞ "	" 12	175
			1 "	" 16	270
			1 "	" 14	216
			1 "	" 12	152

Corrugated Sheet Iron.

No. Birmingham Gauge.	Thickness.	Weight per Square Foot Black.	Weight per Square Foot, Galvanized.	Weight per Square of 100 Square Feet, when Laid, allowing 6 in. Lap in Length and 2½ in. or one Corrugation in Width of Sheet, for Sheet Lengths of-					
.....	Inches.	Ounces.	Ounces	5 ft.	6 ft.	7 ft.	8 ft.	9 ft.	10 ft
16	.065	53	54	365	358	353	350	348	346
18	.049	39	40	275	270	267	264	262	261
20	.035	29	31	196	192	190	188	186	185
22	.028	23	25	156	154	152	150	149	148
24	.022	19	21	123	121	119	118	117	117
26	.018	16	18	101	99	97	97	96	95

Galvanized Sheet Iron.

STANDARD SIZES.

Nos. 10 to 17 iron.....24, 26, 28 and 30 x 72, 84 and 96 inches.
" 18 to 20 " .....24, 26, 28 and 30 x 72, 84 and 96 inches.
" 21 to 24 " .....24, 26, 28 and 30 x 72, 84 and 96 inches.
" 25 to 26 " .....24, 26, 28 and 30 x 72, 84 and 96 inches.
" 27 to 28 " .....24, 26, 28 and 30 x 72, 84 and 96 inches.

EXTREME SIZES.

Nos. 10 to 17 iron..... 44 x 120
" 18 to 20 " .....44 x 120
" 21 to 24 " .....44 x 96
" 25 to 26 " .....36 x 96
" 27 to 28 " .....30 x 96

WEIGHT OF GALVANIZED SHEET IRON.

*No. Wire Gauge.	Weight per sq. ft.
14	60 oz.
16	48 "
17	43 "
18	38 "
19	33 "
20	28 "
21	24 "
22	21 "

No. Wire Guage.	Weight per sq. ft.
23	19 oz.
24	17 "
25	16 "
26	15 "
27	14 "
28	13 "
29	12 "

*Birmingham wire gauge.

Russia Sheet Iron.

SIZE 28x56 INCHES = 10.88 SQUARE FEET.

Russian Gauge No.	Weight per Sheet. lbs.	Weight per Square Foot. lbs.	Birmingham Wire Gauge No.
7	6.25	0.574	29
8	7.25	0.666	28
9	8.	0.735	27
10	9.	0.827	26
11	10.	0.918	25
12	10.75	0.987	24½
13	11.75	1.08	24
14	12.50	1.15	23¼
15	13.50	1.24	22⅜
16	14.50	1.33	21½

PLATE IRON.

Weight of Superficial Foot.

Thickness.	Thickness, Brmingham Wire Gauge.	Weight.	Thickness.	Thickness, Birmingham Wire Gauge.	Weight.
Inches.	No.	Pounds	Inches.	No.	Pounds.
1/32=.03125	21	1.25	5/16=.3125	½	12.58
1/16=.0625	17	2.519	3/8=.375	00	15.10
3/32=.0937	13 light	3.788	7/16=.4375	000	17.65
⅛=.125	10½	5.054	½=.5	.....	20.20
5/32=.1562	8½	6.305	9/16=.5625	.....	22.76
3/16=.1875	6½	7.578	5/8=.625	.....	25.16
7/32=.2187	5	8.19	¾=.75	.....	30.20
¼=.25	4	10.09	⅞=.875	.....	35.30
9/32=.2812	3	11.38	1=.1	.....	40.40

To Ascertain the Weight of Plate Iron.

FOR RECTANGULAR SHEETS.

RULE.—Multiply the product of length by breadth in inches by one of the following decimals, according to thickness, and their product will be the weight required.

3/16 Thick x .0526	7/16 Thick x .1226
¼ " x .07	½ " x .14
5/16 " x .0874	9/16 " x .158
⅜ " " .1048	

FOR CIRCULAR SHEETS.

RULE.—Multiply the square of the diameter by one of the following decimals:

3/16 Thick x .0414	7/16 Thick x .0962
¼ " x .055	½ " x .11
5/16 " x .0686	9/16 " x .124
⅜ " x .0823	

Weight of Sheet and Plate Iron Per Square Foot.

BIRMINGHAM WIRE GAUGE.

No.	Lbs.	No.	Lbs.	No.	Lbs.
1	11.25	11	5.	21	1.40625
2	10.625	12	4.375	22	1.25
3	10.	13	3.75	23	1.12
4	9.375	14	3.125	24	1.
5	8.75	15	2.8125	25	.90
6	8.125	16	2.50	26	.80
7	7.5	17	2.1875	27	.72
8	6.875	18	1.875	28	.64
9	6.25	19	1.71875	29	.56
10	5.625	20	1.5625	30	.50

Thickness of Plate and Sheet Iron.

BIRMINGHAM WIRE GAUGE.

No.	Fractional part of an inch.	No.	Fractional part of an inch.
1	$\frac{9}{32}$	11	$\frac{1}{8}$
2	$\frac{17}{64}$	12	$\frac{7}{64}$
3	$\frac{1}{4}$	13	$\frac{3}{32}$
4	$\frac{15}{64}$	14	$\frac{5}{64}$
5	$\frac{7}{32}$	15	$\frac{9}{128}$
6	$\frac{13}{64}$	16	$\frac{1}{16}$
7	$\frac{3}{16}$	17	$\frac{7}{128}$
8	$\frac{11}{64}$	18	$\frac{3}{64}$
9	$\frac{5}{32}$	20	$\frac{5}{128}$
10	$\frac{9}{64}$	22	$\frac{1}{32}$

Superheated steam has been demonstrated by the most distinguished engineers, from Watt down to the present day, as the best means of preventing "cylinder condensation," to which has been attributed the true cause for the enormous loss sustained in the use of the steam engine by the present method of using saturated steam. The way this loss occurs is exemplified as follows: With a cylinder in which steam at half stroke, or 50 per cent cut-off, is used—say at any pressure—imagine the steam admitted until the piston reaches half stroke, the boiler communication closed, and the steam allowed to expand through the rest of the stroke, the exhaust opened, and the piston returned—then upon the steam coming in on the next stroke, we should expect to find the internal surfaces in the same condition as they were at first. But experiments and all experience have shown us, that in the operations which have gone on during the first stroke, the internal surfaces have become chilled to a certain extent, and that a considerable portion of the steam entering is condensed by them, and converted into water.

Table of Weight of Cast Iron.*

Assuming 450 lbs. to a cubic ft., a pound contains 3.8400 cubic inches a ton 5 cubic ft.; and a cubic inch weighs .2604 lbs.

Thickness or Diameter in Inches.	Thickness or Diameter in decimals of a foot.	Weight of a square Foot. Pounds.	Weight of a square bar 1 foot long, pounds.	Weight of a round bar 1 foot long, pounds.	Weight of balls, pounds.	Thickness or Diameter in inches.	Thickness or Diameter in decimals of a foot.	Weight of a square foot. Pounds.	Weight of a square bar 1 foot long, pounds.	Weight of a round bar 1 foot long. Pounds.	Weight of balls, Pounds.
1/32	.0026	1.173	.003	.002		3.1/8	.2604	117.3	30.52	23.97	4.162
1/16	.0052	2.344	.012	.010		1/4	.2708	121.8	33.01	25.93	4.681
3/32	.0078	3.516	.027	.021	.0001	3/8	.2813	126.5	35.60	27.95	5.243
1/8	.0104	4.687	.048	.038	.0003	1/2	.2917	131.2	38.28	30.07	5.846
5/32	.0130	5.861	.076	.060	.0005	5/8	.3021	135.9	41.07	32.25	6.498
3/16	.0156	7.032	.110	.086	.0009	3/4	.3125	140.6	43.95	34.51	7.193
7/32	.0182	8.203	.150	.118	.0014	7/8	.3229	145.3	46.93	36.85	7.934
1/4	.0208	9.375	.195	.154	.0021	4.	.3333	150.0	50.01	39.27	8.726
9/32	.0234	10.54	.247	.194	.0030	1/8	.3438	154.7	53.18	41.77	9.572
5/16	.0260	11.73	.305	.240	.0042	1/4	.3542	159.3	56.46	44.33	10.47
11/32	.0287	12.89	.370	.290	.0056	3/8	.3646	164.0	59.82	46.99	11.42
3/8	.0313	14.06	.440	.346	.0072	1/2	.3750	168.7	63.33	49.71	12.43
13/32	.0339	15.24	.516	.400	.0092	5/8	.3854	173.4	66.86	52.52	13.49
7/16	.0365	16.41	.598	.470	0114	3/4	.3958	178.1	70.52	55.39	14.62
15/32	.0391	17.56	.687	.540	0140	7/8	.4063	182.8	74.28	58.34	15.81
1/2	.0417	18.75	.781	.610	.0170	5.	.4167	187.5	78.12	61.37	17.05
9/16	.0469	21.10	.989	.777	0243	1/8	.4271	192.2	82 10	64.47	18.35
5/8	.0521	23.44	1.221	.959	.0334	1/4	.4375	196.9	86.14	67.65	19.73
11/16	.0573	25.79	1.478	1.161	.0444	3/8	.4479	201.6	90.29	70.52	21.18
3/4	.0625	28.12	1.758	1.381	.0575	1/2	.4583	206.2	94.54	74.26	22.68
13/16	.0677	30.47	2.064	1.621	.0732	5/8	.4688	210.9	98.89	77.66	24.27
7/8	.0729	32.81	2.393	1.880	.0913	3/4	.4792	215.6	103.3	81.16	25.93
15/16	.0781	35.16	2.747	2.158	.1124	7/8	.4896	220.3	107.9	84.72	27.41
1.	.0833	37.50	3.125	2.455	.1363	6.	.5000	225.0	112.5	88.30	29.44
1/16	.0885	39.84	3.528	2.771	.1636	1/4	.5208	234.4	122.1	95.89	33.28
1/8	.0938	42.19	3.955	3.107	.1942	1/2	.5417	243.8	132.0	103.7	37.44
3/16	.0990	44.53	4.407	3.461	.2284	3/4	.5625	253.1	142.4	111.9	41.94
1/4	.1042	46.87	4.883	3.835	.2664	7.	.5833	262.5	153.2	120.2	46.77
5/16	.1094	49.22	5.384	4.229	.3084	1/4	.6042	271.9	164.2	129.0	51.97
3/8	.1146	51.57	5.909	4.640	.3546	1/2	.6250	281.3	175.8	138.1	57.54
7/16	.1198	53.91	6.461	5.073	.4058	3/4	.6458	290.7	187.7	147.4	63.47
1/2	.1250	56.26	7.033	5.523	.4603	8.	.6667	300.0	200.1	157.0	69.82
9/16	.1302	58.60	7.632	5.993	.5204	1/4	.6875	309.4	212.7	167.0	76.58
5/8	.1354	60.94	8.253	6.484	.5852	1/2	.7083	318.8	225.8	177.3	83.74
11/16	.1406	63.28	8.900	6.991	.6555	3/4	.7292	328.2	239.3	187.9	91.35
3/4	.1458	65.63	9.572	7.518	.7310	9.	.7500	337.4	253.1	198.8	99.42
13/16	.1510	67.97	10.27	8.064	.8122	1/4	.7708	346.8	267.4	210.0	107.9
7/8	.1563	70.32	10.99	8.630	.8991	1/2	.7917	356.2	282.1	221.5	116.8
15/16	.1615	72.66	11.73	9.215	.9920	3/4	.8125	365.6	297.0	233.3	126.3
2.	.1667	75.01	12.50	9.821	1.073	10.	.8333	375.0	312.5	245.5	136.3
1/8	.1771	79.70	14.11	11.09	1.308	1/4	.8542	384.4	328.4	257.8	146.8
1/4	.1875	84.40	15.83	12.43	1.554	1/2	.8750	393.7	344.5	270.6	157.9
3/8	.1979	89.07	17.63	13.85	1.827	3/4	.8958	403.1	361.2	283.7	169.3
1/2	.2083	93.75	19.54	15.34	2.131	11.	.9167	412.5	378.2	297.0	181.5
5/8	.2188	98.44	21.54	16.56	2.467	1/4	.9375	421.9	395.5	310.6	194.2
3/4	.2292	103.2	23.64	18.56	2.835	1/2	.9583	431.2	413.3	324.6	207.3
7/8	.2396	107.8	25.84	20.29	3 241	3/4	.9792	440.6	431.4	338.8	219.2
3.	.2500	112.6	28.13	22.10	3.682	12.	1 Ft.	450.	450.	353.4	235.6

*For copper, multiply by 1.2; lead, multiply by 1.6; brass, add 1-7th; zinc, multiply by .97. All approximate.

Flutes of reamers should be 10 or 12 to the inch diametrical pitch.

Value of Iron Per Gross Ton.

At from 1 cent to 11¾ cents per lb.

1	$22.40	4⅝	$103.60	8¼	$184.80
1⅛	25.20	4¾	106.40	8⅜	187.60
1¼	28.00	4⅞	109.20	8½	190.40
1⅜	30.60	5	112 00	8⅝	193.20
1½	33.60	5⅛	114.80	8¾	196.00
1⅝	36.40	5¼	117.60	8⅞	198.80
1¾	39.20	5⅜	120.40	9	201.60
1⅞	42.00	5½	123.20	9⅛	204.40
2	44.80	5⅝	126.00	9¼	207.20
2⅛	47.60	5¾	128.80	9⅜	210.00
2¼	50.40	5⅞	131.60	9½	212.80
2⅜	53.20	6	134.40	9⅝	215.60
2½	56.00	6⅛	137.20	9¾	218.40
2⅝	58.80	6¼	140.00	9⅞	221.20
2¾	61.60	6⅜	142.80	10	224.00
2⅞	64.40	6½	145.60	10⅛	226.80
3	67.20	6⅝	148.40	10¼	229.60
3⅛	70.00	6¾	151.20	10⅜	232.40
3¼	72.80	6⅞	154.00	10½	235.20
3⅜	75.60	7	156.80	10⅝	238.00
3½	78.40	7⅛	159.60	10¾	240.80
3⅝	81.20	7¼	162.40	10⅞	243.60
3¾	84.00	7⅜	165.20	11	246.40
3⅞	86.80	7½	168.00	11⅛	249.20
4	89.60	7⅝	170.80	11¼	252.00
4⅛	92.40	7¾	173.60	11⅜	254.80
4¼	95.20	7⅞	176.40	11½	257.60
4⅜	98.00	8	179.20	11⅝	260.40
4½	100.80	8⅛	182.00	11¾	263.20

Decimal Value of Iron Per Gross Ton.

At from $\frac{1}{10}$ cent to 10 cents per pound.

Cts.	Dolls.	Cts.	Dolls.	Cts.	Dolls.	Cts.	Dolls.
.1	2.24	2.6	58.24	5.1	114.24	7.6	170.24
.2	4.48	2.7	60.48	5.2	116.48	7.7	172.48
.3	6.72	2.8	62.72	5.3	118.72	7.8	174.72
.4	8.96	2.9	64.96	5.4	120.96	7.9	176.96
.5	11.20	3 0	67.20	5.5	123.20	8.0	179.20
.6	13.44	3.1	69.44	5.6	125.44	8.1	181.44
.7	15.68	3.2	71.68	5.7	127.68	8.2	183.68
.8	17.92	3.3	73.92	5.8	129.92	8.3	185.92
.9	20.16	3.4	76.16	5.9	132.16	8.4	188.16
1.0	22.40	3.5	78.40	6.0	134.40	8.5	190.40
1.1	24.64	3.6	80.64	6.1	136.64	8.6	192.64
1.2	26.88	3.7	82.88	6.2	138.88	8.7	194.83
1.3	29.12	3.8	85.12	6.3	141.12	8.8	197.12
1.4	31.36	3.9	87.36	6.4	143.36	8.9	199.36
1.5	33.60	4.0	89.60	6 5	145.60	9.0	201.60
1.6	35.84	4.1	91.84	6.6	147.84	9.1	203.84
1.7	38.08	4.2	94.08	6.7	150.08	9.2	206.08
1.8	40.32	4.3	96.32	6.8	152.32	9.3	208.32
1.9	42.56	4.4	98.56	6.9	154.56	9.4	210.56
2.0	44.80	4.5	100.80	7.0	156.80	9.5	212.80
2.1	47.04	4.6	103.04	7.1	159.04	9.6	215.04
2.2	49.28	4.7	105.28	7.2	161.28	9.7	217.28
2.3	51.52	4.8	107.52	7.3	163.52	9.8	219.52
2.4	53.76	4.9	109.76	7.4	165.76	9.9	221.76
2.5	56.00	5.0	112.00	7.5	168.00	10.0	224.00

Value of Iron.

Value per gross ton (2240 lbs.) of Iron, at from $\frac{1}{16}$ of a cent to 12½ cents per lb., increasing at the rate of $\frac{1}{16}$th and ⅛ of a cent per lb.

Per lb. in cents and $\frac{1}{16}$ths.	Price per ton.	Per lb. in cents and $\frac{1}{16}$ths.	Price per ton.	Per lb. in cents and ⅛ths.	Price per ton.
$\frac{1}{16}$	$1.40	2⅝	$58.80	7⅜	$165.20
⅛	2.80	$2\frac{1}{16}$	60.20	7½	168.00
$\frac{3}{16}$	4.20	2¾	61.60	7⅝	170.80
¼	5.60	$2\frac{3}{16}$	63.00	7¾	173.60
$\frac{5}{16}$	7.00	2⅞	64.40	7⅞	176.40
⅜	8.40	$2\frac{5}{16}$	65.80	8	179.20
$\frac{7}{16}$	9.80	3	67.20	8⅛	182.00
½	11.20	3⅛	70.00	8¼	184.80
$\frac{9}{16}$	12.60	3¼	72.80	8⅜	187.60
⅝	14.00	3⅜	75.60	8½	190.40
$\frac{11}{16}$	15.40	3½	78.40	8⅝	193.20
¾	16.80	3⅝	81.20	8¾	196.00
$\frac{13}{16}$	18.20	3¾	84.00	8⅞	198.80
⅞	19.60	3⅞	86.80	9	201.60
$\frac{15}{16}$	21.00	4	89.60	9⅛	204.40
1	22.40	4⅛	92.40	9¼	207.20
$1\frac{1}{16}$	23.80	4¼	95.20	9⅜	210.00
1⅛	25.20	4⅜	98.00	9½	212.80
$1\frac{3}{16}$	26.60	4½	100.80	9¾	218.40
1¼	28.00	4⅝	103.60	9⅞	221.20
$1\frac{5}{16}$	29.40	4¾	106.40	10	224.00
1⅜	30.80	4⅞	109.20	10⅛	226.80
$1\frac{7}{16}$	32.20	5	112.00	10¼	229.60
1½	33.60	5⅛	114.80	10⅜	232.40
$1\frac{9}{16}$	35.00	5¼	117.60	10½	235.20
1⅝	36.40	5⅜	120.40	10⅝	238.00
$1\frac{11}{16}$	37.80	5½	123.20	10¾	240.80
1¾	39.20	5⅝	126.00	10⅞	243.60
$1\frac{13}{16}$	40.60	5¾	128.80	11	246.40
1⅞	42.00	5⅞	131.60	11⅛	249.20
$1\frac{15}{16}$	43.40	6	134.40	11¼	252.00
2	44.80	6⅛	137.20	11⅜	254.80
$2\frac{1}{16}$	46.20	6¼	140.00	11½	257.60
2⅛	47.60	6⅜	142.80	11⅝	260.40
$2\frac{3}{16}$	49.00	6½	145.60	11¾	263.20
2¼	50.40	6⅝	148.40	11⅞	266.00
$2\frac{5}{16}$	51.80	6¾	151.20	12	268.80
2⅜	53.20	6⅞	154.00	12⅛	271.60
$2\frac{7}{16}$	54.60	7	156.80	12¼	274.40
2½	56.00	7⅛	159.60	12⅜	277.20
$2\frac{9}{16}$	57.40	7¼	162.40	12½	280.00

In a chimney where the draught is produced by the excess of weight of the outside air over that of the hot gas in the chimney, the greatest quantity of gas by weight will pass up the chimney when its temperature is about 625 degrees greater than that of the outside air. But it is a well-known fact that natural draught is not so economical as a forced draught, because a certain amount of heat is wasted in producing this draught—about 25 per cent.—and the cost of a forced draught to burn the same amount of coal in the same time is not half so great.

Weight of Wrought and Cast Iron and Steel.

	Wroug't Iron per lb.	Steel per lb.	Cast Iron per lb.
Per superficial foot, 1 inch thick.....	40.42	40.83	37.5
Per cubic inch.....	.281	.284	.2
Per cubic foot.....	485.	490.	450.

Average Breaking and Crushing Strains of Iron and Steel.

Breaking strain of wrought iron = 23 tons...	Per square inch of section.
Crushing strain of wrought iron = 17 tons...	
Breaking strain of cast iron about 7½ tons...	
Crushing strain of cast iron = 50 tons.....	
Breaking strain of steel bars about 50 tons...	
Crushing strain of steel bars up to 116 tons...	

Strength of Iron—Charcoal Pig.

	By whom tests were made.	No. of sam. tested.		Trans. strength.	Tensile strength.	Specific gravity.
				lbs. per sq. inch.	lbs. per sq. inch.	
American	U. S. Ord. Dept.	56	Mean	9,409	27,232	7.302
			Least	8,014	22,402	7.163
			Great	10,717	31,027	7.402
English	Brit. Ord. Dept.	51	Mean	7,102	23,257	7.140
			Least	5,538	17,958	7.052
			Great	9,120	28 960	7.259

Tests by U. S. Ordnance Department have determined.

1. That the strength and density of iron are greatly increased by its continued infusion, and by its being remelted.
2. That the transverse strength is augmented by rapid cooling in small castings.
3. That the tensile strength is increased by slow cooling in large masses.

SOLDERING IRON AND STEEL.

Dr. Sieburger publishes the following methods for soldering iron and steel:

If large and thick pieces of iron and steel are to be joined, sheet copper or brass is placed between the perfectly clean surfaces to be united, which are then tightly wired together. The joint is covered with wet clay free from sand, and dried slowly near the fire. When the mud is dry the joint is heated by a blast to a white heat and cooled, suddenly if iron, and slowly if steel. When brass is used, it requires less heat, of course than copper.

For objects of moderate size, hard brass solder is made by fusing together 8 parts of brass and 1 part tin. Soft brass solder is composed of 6 parts brass, 1 part zinc, and 1 part tin.

For soldering small iron or steel articles, a hard silver solder composed of equal parts of fine silver and malleable brass is used, the mass being protected by borax. Soft silver solder differs from this only in the addition of $\frac{1}{16}$ part tin.

Very fine and delicate articles are soldered either with pure gold or a gold solder composed of 1 part gold, 2 parts silver, 3 parts copper.

Weight of Sheets of Wrought Iron, Steel, Copper and Brass.

WEIGHT PER SQUARE FOOT. THICKNESS BY BIRMINGHAM GAUGE.

No. of Gauge.	Thickness in inches.	Iron.	Steel.	Copper.	Brass.
0000	.454	18.22	18.46	20.57	19.43
000	.425	17.05	17.28	19.25	18.19
00	.38	15.25	15.45	17.21	16.26
0	.34	13.64	13.82	15.40	14.55
1	.3	12.04	12.20	13.59	12.84
2	.284	11.40	11.55	12.87	12.16
3	.259	10.39	10.53	11.73	11.09
4	.238	9.55	9.68	10.78	10.19
5	.22	8.83	8.95	9.97	9.42
6	.203	8.15	8.25	9.20	8.69
7	.18	7.22	7.32	8.15	7.70
8	.165	6.62	6.71	7.47	7.06
9	.148	5.94	6.02	6.70	6.33
10	.134	5.38	5.45	6.07	5 74
11	.12	4.82	4.88	5.44	5.14
12	.109	4.37	4.43	4.94	4.67
13	.095	3.81	3.86	4.30	4.07
14	.083	3.33	3.37	3.76	3.55
15	.072	2.89	2.93	3.26	3.08
16	.065	2.61	2.64	2.94	2.78
17	.058	2.33	2.36	2.63	2.48
18	.049	1.97	1.99	2.22	2.10
19	.042	1.69	1.71	1.90	1.80
20	.035	1.40	1.42	1.59	1.50
21	.032	1.28	1.30	1.45	1.37
22	.028	1.12	1.14	1.27	1.20
23	.025	1.00	1.02	1.13	1.07
24	.022	.883	.895	1.00	.942
25	.02	.803	.813	.906	.856
26	.018	.722	.732	815	.770
27	.016	.642	.651	.725	.685
28	.014	.562	.569	.634	.599
29	.013	.522	.529	.589	.556
30	.012	.482	.488	.544	.514
31	.01	.401	.407	.453	.428
32	.009	.361	.366	.408	.385
33	.008	.321	.325	.362	.342
34	.007	.281	.285	.317	.300
35	.005	.201	.203	.227	.214
Specific Gravity,		7.704	7.806	8.698	8.218
Weight Cubic Foot.		481.25	487.75	543.6	513.6
" " Inch,		.2787	.2823	.3146	.2972

Incrustation is commonly stated to be a bad conductor of heat, and that any great thickness of it on the plates of a boiler causes a largely increased expenditure of fuel. It is not clearly determined yet whether the increased expenditure of fuel is quite so great as has been claimed. In many instances it is grossly exaggerated.

Weight of Sheets of Wrought Iron, Steel, Copper and Brass.

(*Continued.*)

WEIGHT PER SQ. FOOT. THICKNESS BY AMERICAN (BROWNE & SHARPE'S) GAUGE.

No. of Gauge.	Thickness in inches.	Iron.	Steel.	Copper.	Brass.
0000	.46	18.46	18.70	20.84	19.69
000	.4096	16.44	16.66	18.56	17.53
00	.3648	14.64	14.83	16.53	15.61
0	.3249	13.04	13.21	14.72	13.90
1	.2893	11.61	11.76	13.11	12.38
2	.2576	10.34	10.48	11.67	11.03
3	.2294	9.21	9.33	10.39	9.82
4	.2043	8.20	8.31	9.26	8.74
5	.1819	7.30	7.40	8.24	7.79
6	.1620	6.50	6.59	7.34	6.93
7	.1443	5.79	5.87	6.54	6.18
8	.1285	5.16	5.22	5.82	5.50
9	.1144	4.59	4.65	5.18	4.90
10	.1019	4.09	4.14	4.62	4.36
11	.0907	3.64	3.69	4.11	3.88
12	.0808	3.24	3.29	3.66	3.46
13	.0720	2.89	2.93	3.26	3.08
14	.0641	2.57	2.61	2.90	2.74
15	.0571	2.29	2.32	2.59	2 44
16	.0508	2.04	2.07	2.30	2.18
17	.0453	1.82	1.84	2.05	1.94
18	.0403	1.62	1.64	1.83	1.73
19	.0359	1.44	1.46	1.63	1.54
20	.0320	1.28	1.30	1.45	1.37
21	.0285	1.14	1.16	1.29	1.22
22	.0253	1.02	1.03	1.15	1.08
23	.0226	.906	.918	1.02	.966
24	.0201	.807	.817	.911	.860
25	.0179	.718	.728	.811	.766
26	.0159	.640	.648	.722	.682
27	.0142	.570	.577	.643	.608
28	.0126	.507	.514	.573	.541
29	.0113	.452	.458	.510	.482
30	.0100	.402	.408	.454	.429
31	.0089	.358	.363	.404	.382
32	.0080	.319	.323	.360	.340
33	.0071	.284	.288	.321	.303
34	.0063	.253	.256	.286	.270
35	.0056	.225	.228	.254	.240

As there are many gauges in use differing from each other, and even the thicknesses of a certain specified gauge, as the Birmingham, are not assumed the same by all manufacturers, orders for sheets and wire should always state the weight per square foot, or the thickness in thousandths of an inch.

Iron.

The specific gravity of electro deposited iron is 8.139; that of steel bars and plates averages 7.823; that of tilted or hammered iron bars and forgings ranges from 7.76 to 7.798; that of rolled iron plates or bars varies between 7.76 and 7.54. The specific gravity of cast iron ranges between 6.85 and 7.35; that used in construction averaging 7.1. Wrought iron is very bad in quality when its specific gravity is less than 7.5.

Table Showing the Number of Square Feet in Circular Heads (Unflanged) of Given Diameter.

Diam. in Inches.	Area in Sqr. ft.	Diam. in Inches.	Area in Sqr. ft.	Diam. in Inches.	Area in Sq. ft.
12	.7854	57	17.72	101	55.64
13	.922	58	18.35	102	56.75
14	1.07	59	18.99	103	57.86
15	1.23	60	19.64	104	58.99
16	1.40	61	20.09	105	60.13
17	1.58	62	20.97	106	61.28
18	1.77	63	21.65	107	62.44
19	1.97	64	22.34	108	63.62
20	2.18	65	23.04	109	64.80
21	2.41	66	23.76	110	66.
22	2.64	67	24.48	111	67.20
23	2.89	68	25.22	112	68.42
24	3.14	69	25.97	113	69.64
25	3.41	70	26.73	114	70.88
26	3.69	71	27.49	115	72.13
27	3.98	72	28.27	116	73.39
28	4.28	73	29.06	117	74.66
29	4.59	74	29.87	118	75.94
30	4.91	75	30.68	119	77.24
31	5.24	76	31.50	120	78.54
32	5.59	77	32.34	121	79.85
33	5.94	78	33.18	122	81.18
34	6.30	79	34.04	123	82.52
35	6.68	80	34.91	124	83.86
36	7.07	81	35.78	125	85.22
37	7.47	82	36.67	126	86.59
38	7.88	83	37.57	127	87.97
39	8.30	84	38.48	128	89.36
40	8.73	85	39.41	129	90.76
41	9.17	86	40.34	130	92.17
42	9.62	87	41.28	131	93.60
43	10.08	88	42.24	132	95.03
44	10.56	89	43.20	133	96.48
45	11.04	90	44.18	134	97.93
46	11.54	91	45.17	135	99.40
47	12.05	92	46.16	136	100.88
48	12.57	93	47.17	137	102.37
49	13.10	94	48.19	138	103.87
50	13.64	95	49.22	139	105.38
51	14.19	96	50.27	140	106.90
52	14.75	97	51.32	141	108.43
53	15.32	98	52.38	142	109.98
54	15.90	99	53.46	143	111.53
55	16.50	100	54.54	144	113.10
56	17.10				

LOGARITHMS OF NUMBERS.

No.	0	1	2	3	4	5	6	7	8	9	Diff.
10	0000	0043	0086	0128	0170	0212	0253	0294	0334	0374	40
11	0414	0453	0492	0531	0569	0607	0645	0682	0719	0755	37
12	0792	0828	0864	0899	0934	0969	1004	1038	1072	1106	33
13	1139	1173	1206	1239	1271	1303	1335	1367	1399	1430	31
14	1461	1492	1523	1553	1584	1614	1644	1673	1703	1732	29
15	1761	1790	1818	1847	1875	1903	1931	1959	1987	2014	27
16	2041	2068	2095	2122	2148	2175	2201	2227	2253	2279	25
17	2304	2330	2355	2380	2405	2430	2455	2480	2504	2529	24
18	2553	2577	2601	2625	2648	2672	2695	2718	2742	2765	23
19	2788	2810	2833	2856	2878	2900	2923	2945	2967	2989	21
20	3010	3032	3054	3075	3096	3118	3139	3160	3181	3201	21
21	3222	3243	3263	3284	3304	3324	3345	3365	3385	3404	20
22	3424	3444	3464	3483	3502	3522	3541	3560	3579	3598	19
23	3617	3636	3655	3674	3692	3711	3729	3747	3766	3784	18
24	3802	3820	3838	3856	3874	3892	3909	3927	3945	3962	17
25	3979	3997	4014	4031	4048	4065	4082	4099	4116	4133	17
26	4150	4166	4183	4200	4216	4232	4249	4265	4281	4298	16
27	4314	4330	4346	4362	4378	4393	4409	4425	4440	4456	16
28	4472	4487	4502	4518	4533	4548	4564	4579	4594	4609	15
29	4624	4639	4654	4669	4683	4698	4713	4728	4742	4757	14
30	4771	4786	4800	4814	4829	4843	4857	4871	4886	4900	14
31	4914	4928	4942	4955	4969	4983	4997	5011	5024	5038	13
32	5051	5065	5079	5092	5105	5119	5132	5145	5159	5172	13
33	5185	5198	5211	5224	5237	5250	5263	5276	5289	5302	13
34	5315	5328	5340	5353	5366	5378	5391	5403	5416	5428	13
35	5441	5453	5465	5478	5490	5502	5514	5527	5539	5551	12
36	5563	5575	5587	5599	5611	5623	5635	5647	5658	5670	12
37	5682	5694	5705	5717	5729	5740	5752	5763	5775	5786	12
38	5798	5809	5821	5832	5843	5855	5866	5877	5888	5899	12
39	5911	5922	5933	5944	5955	5966	5977	5988	5999	6010	11
No	0	1	2	3	4	5	6	7	8	9	Diff.

The best mode of oiling a belt is to take it from the pulleys, and immerse it in a warm solution of tallow and oil; after allowing it to remain a few moments, the belt should be immersed in water heated to 100 degrees Fahr., and instantly removed. This will drive the oil and tallow all in, and at the same time properly temper the leather.

LOGARITHMS OF NUMBERS.

(*Continued.*)

No.	0	1	2	3	4	5	6	7	8	9	Diff.
40	6021	6031	6042	6053	6064	6075	6085	6096	6107	6117	11
41	6128	6138	6149	6160	6170	6180	6191	6201	6212	6222	10
42	6232	6243	6253	6263	6274	6284	6294	6304	6314	6325	10
43	6335	6345	6355	6365	6375	6385	6395	6405	6415	6425	10
44	6435	6444	6454	6464	6474	6484	6493	6503	6513	6522	10
45	6532	6542	6551	6561	6571	6580	6590	6599	6609	6618	10
46	6628	6637	6646	6656	6665	6675	6684	6693	6702	6712	9
47	6721	6730	6739	6749	6758	6767	6776	6785	6794	6803	9
48	6812	6821	6830	6839	6848	6857	6866	6875	6884	6893	9
49	6902	6911	6920	6928	6937	6946	6955	6964	6972	6981	9
50	6990	6998	7007	7016	7024	7033	7042	7050	7059	7067	9
51	7076	7084	7093	7101	7110	7118	7126	7135	7143	7152	8
52	7160	7168	7177	7185	7193	7202	7210	7218	7226	7235	8
53	7243	7251	7259	7267	7275	7284	7292	7300	7308	7316	8
54	7324	7332	7340	7348	7356	7364	7372	7380	7388	7396	8
55	7404	7412	7419	7427	7435	7443	7451	7459	7466	7474	8
56	7482	7490	7497	7505	7513	7520	7528	7536	7543	7551	8
57	7559	7566	7574	7582	7589	7597	7604	7612	7619	7627	7
58	7634	7642	7649	7657	7664	7672	7679	7686	7694	7701	8
59	7709	7716	7723	7731	7738	7745	7752	7760	7767	7774	8
60	7782	7789	7796	7803	7810	7818	7825	7832	7839	7846	7
61	7853	7860	7868	7875	7882	7889	7896	7903	7910	7917	7
62	7924	7931	7938	7945	7952	7959	7966	7973	7980	7987	6
63	7993	8000	8007	8014	8021	8028	8035	8041	8048	8055	7
64	8062	8069	8075	8082	8089	8096	8102	8109	8116	8122	7
65	8129	8136	8142	8149	8156	8162	8169	8176	8182	8189	6
66	8195	8202	8209	8215	8222	8228	8235	8241	8248	8254	7
67	8261	8267	8274	8280	8287	8293	8299	8306	8312	8319	6
68	8325	8331	8338	8344	8351	8357	8363	8370	8376	8382	6
69	8388	8395	8401	8407	8414	8420	8426	8432	8439	8445	6
No.	0	1	2	3	4	5	6	7	8	9	Diff.

Water contracts and becomes denser in cooling, until it reacher 39.2 degrees Fahrenheit, when it has reached its greatest density. Below this point it expands, and at 32 degrees Fahrenheit it becomes solid, or freezes, and in the act of freezing expands considerably. Owing to the expansion, ice is lighter than water, it having a specific gravity of 0.916, water being 1.000.

LOGARITHMS OF NUMBERS.

(*Continued.*)

No.	0	1	2	3	4	5	6	7	8	9	Diff.
70	8451	8457	8463	8470	8476	8482	8488	8494	8500	8506	7
71	8513	8519	8525	8531	8537	8543	8549	8555	8561	8567	6
72	8573	8579	8585	8591	8597	8603	8609	8615	8621	8627	6
73	8633	8639	8645	8651	8657	8663	8669	8675	8681	8686	6
74	8692	8698	8704	8710	8716	8722	8727	8733	8739	8745	6
75	8751	8756	8762	8768	8774	8779	8785	8791	8797	8802	6
76	8808	8814	8820	8825	8831	8837	8842	8848	8854	8859	6
77	8865	8871	8876	8882	8887	8893	8899	8904	8910	8915	6
78	8921	8927	8932	8938	8943	8949	8954	8960	8965	8971	5
79	8976	8982	8987	8993	8998	9004	9009	9015	9020	9025	6
80	9031	9036	9042	9047	9053	9058	9063	9069	9074	9079	6
81	9085	9090	9096	9101	9106	9112	9117	9122	9128	9133	5
82	9138	9143	9149	9154	9159	9165	9170	9175	9180	9186	5
83	9191	9196	9201	9206	9212	9217	9222	9227	9232	9238	5
84	9243	9248	9253	9258	9263	9269	9274	9279	9284	9289	5
85	9294	9299	9304	9309	9315	9320	9325	9330	9335	9340	5
86	9345	9350	9355	9360	9365	9370	9375	9380	9385	9390	5
87	9395	9400	9405	9410	9415	9420	9425	9430	9435	9440	5
88	9445	9450	9455	9460	9465	9469	9474	9479	9484	9489	5
89	9494	9499	9504	9509	9513	9518	9523	9528	9533	9538	4
90	9542	9547	9552	9557	9562	9566	9571	9576	9581	9586	4
91	9590	9595	9600	9605	9609	9614	9619	9624	9628	9633	5
92	9638	9643	9647	9652	9657	9661	9666	9671	9675	9680	5
93	9685	9689	9694	9699	9703	9708	9713	9717	9722	9727	4
94	9731	9736	9741	9745	9750	9754	9759	9763	9768	9773	4
95	9777	9782	9786	9791	9795	9800	9805	9809	9814	9818	5
96	9823	9827	9832	9836	9841	9845	9850	9854	9859	9863	5
97	9868	9872	9877	9881	9886	9890	9894	9899	9903	9908	4
98	9912	9917	9921	9926	9930	9934	9939	9943	9948	9952	4
99	9956	9961	9965	9969	9974	9978	9983	9987	9991	9996	4
No.	0	1	2	3	4	5	6	7	8	9	Diff.

Water containing carbonate of lime, held in solution by free carbonic acid, boils steadily, and is not liable to cause foaming. As the water boils the carbonic acid gradually escapes, the carbonate of lime then being deposited in the insoluble, and frequently in the crystalline state. The more slowly it is deposited, the more crystalline it will be, sometimes becoming hard like a rock, and requiring to be chipped off with hammer and chisel.

Hyperbolical Logarithms.

No.	Logarithm.	No.	Logarithm.	No.	Logarithm.
1.25	.22314	5.	1.60943	9.5	2.25129
1.5	.40546	5.25	1.65822	10.	2.30258
1.75	.55961	5.5	1.70474	11.	2.39789
2.	.69314	5.75	1.74919	12.	2.48490
2.25	.81093	6.	1.79175	13.	2.56494
2.5	.91629	6.25	1.83258	14.	2.63905
2.75	1.01160	6.5	1.87180	15.	2.70805
3.	1.09861	6.75	1.90954	16.	2.77258
3.25	1.17865	7.	1.94591	17.	2.83421
3.5	1.25276	7.25	1.98100	18.	2.89037
3.75	1.32175	7.5	2.01490	19.	2.94443
4.	1.38629	7.75	2.04769	20.	2.99573
4.25	1.44691	8.	2.07944	21.	3.04452
4.5	1.50507	8.5	2.14006	22.	3.09104
4.75	1.55814	9.	2.19722		

Hyperbolic logarithms are used for computing the areas included within hyperbolic curves, and are most convenient for that purpose. For the manner in which this is done, see Weisbach's Mechanics of Engineering.

Lengths of a Degree of Longitude in Different Latitudes, at Sea Level.

Deg. of Latitude.	Miles.	Deg. of Latitude.	Miles.	Deg. of Latitude.	Miles.	Deg. of Latitude.	Miles.
0	69.16	26	62.20	52	42.67	78	14.42
2	69.12	28	61.11	54	40.74	80	12.05
4	68.99	30	59.94	56	38.76	82	9.66
6	68.78	32	58.76	58	36.74		
8	68.49	34	57.39	60	34.67		
10	68.12	36	56.01	62	32.55		
12	67.66	38	54.56	64	30.40		
14	67.12	40	53.05	66	28.21		
16	66.50	42	51.47	68	25.98		
18	65.80	44	49.83	70	23.72		
20	65.02	46	48.12	72	21.43		
22	64.15	48	46.36	74	19.12		
24	63.21	50	44.54	76	16.78		

Dynamite is simply nitro-glycerine mixed with various ingredients, such as nitrate of soda, carbonate of magnesia, and wood pulp. It is put up in paper shells, usually one and a quarter inches in diameter, and eight inches in length, and weighs about one-half pound to each shell or cartridge.

Dynamite will not explode from any ordinary fall or jar; it will burn without explosion, and freezes at forty-two degrees, ten degrees above ordinary freezing point. The fumes of nitro-glycerine produce intense headache, which can be cured by taking a very small dose of it internally.

Fairbairn's Table for Proportioning the Riveting for Steam and Water-tight Lap Joints.

Thickness of each plate.	Diameter of Rivets.	Length of Shank before driving.	From Center to Center of Rivets.	Lap in Single Rievting.	Lap in Double Riveting.
Inches.	Inches.	Inches.	Inches.	Inches.	Inches.
3/16	3/8	7/8	1 1/4	1 1/4	2 1/16
1/4	1/2	1 1/8	1 1/2	1 1/2	2 1/2
5/16	5/8	1 3/8	1 5/8	1 7/8	3 1/16
3/8	3/4	1 5/8	1 3/4	2	3 3/8
1/2	13/16	2 1/4	2	2 1/4	3 3/4
5/8	15/16	2 3/4	2 1/2	2 3/4	4 5/8
3/4	1 1/8	3 1/4	3	3 1/4	5 1/2

Joints for boilers and water tight cisterns are usually proportioned about as per the above table. Mr. Fairbairn considers the strength of the single-riveted lap joint to be about .56, and that of the double-riveted about .7 that of *one* of the full unholed plates, when both joints are proportioned as in the above table. Trautwine thinks .5 and .6 (or about one-seventh part less than Fairbairn's assumption) can be relied upon as safe for practice, with fair qualities of plate and rivet iron. For important work holes should be *drilled*, not punched. For *steel* plates the above proportions are too small.

To Find the Horse Power of a Locomotive.

RULE: Multiply the mean effective pressure per square inch of piston by the length of stroke in feet, and this product by the area of piston in square inches, and this product by the number of strokes per minute, and finally, multiply this last product by 2, for both cylinders, and divide by 33,000.

EXAMPLE: What is the horse-power of a locomotive with cylinders 17 inch diameter and 24 inch stroke, mean effective pressure 120 pounds per square inch, and drivers making 152 revolutions per minute?

$$120 \times 2 = 240$$
$$240 \times 226.9 = 54456.0$$
$$54456.0 \times 304 = 16554624.0$$
$$16554624.0 \times 2 = 33109248.0$$
$$\frac{33109248.0}{33{,}000} = 1003 \text{ horse-power nearly.}$$

Hauling Capacity of Locomotives.

The following table shows the loads or weights of train which locomotives can haul on different grades and curves, at a speed of 20 miles an hour under ordinary conditions, in tons of 2,000 lbs., not including engine and tender. The calculations are made for the following types of engines:

TYPE A.—American locomotive with four driving-wheels and 12,000 lbs. weight on each wheel, the total weight of engine being 36 tons.

TYPE B.—Mogul or ten-wheeled locomotive, with six driving-wheels

and 12,000 lbs. weight on each wheel, the total weight of engine being about 42 tons.

TYPE C.—Consolidation locomotive with eight driving-wheels and 12,000 lbs. weight on each wheel, the total weight of engine being about 54 tons.

	TYPE "A."	TYPE "B."	TYPE "C."
ON STRAIGHT TRACK :			
Level	1,096	1,664	2,226
Grade 20 ft. per mile	547	840½	1,128
" 40 " "	350	545	734
" 60 " "	249	390½	522
" 80 " "	188	302	410
" 100 " "	148	242	330
ON 5-DEGREE CURVES.			
Level	921	1,401½	1,876
Grade 20 ft. per mile	464	716	962
" 40 " "	310	485	654
" 60 " "	227	360½	488
" 80 " "	173	279½	380
" 100 " "	137	225½	308
ON 10-DEGREE CURVES:			
Level	662	1,013	1,358
Grade 20 ft. per mile	401	621½	836
" 40 " "	278	477	590
" 60 " "	207	330½	448
" 80 " "	160	260	354
" 100 " "	128	212	290

Under the most favorable conditions, loads about 50 per cent. greater than these can be hauled.

Table of Gradients and Resistance Due to Gravity Per Ton, for Each.

VERTICAL RISE.		RESISTANCE PER TON.	VERTICAL RISE.		RESISTANCE PER TON.
Ratio.	Per Mile.		Ratio.	Per Mile.	
one in.	feet.	lbs.	one in.	feet.	lbs.
100	52.8	22.4	60	88.	37.3
98	53.9	22.8	58	91.	38.6
96	55.	23.3	56	94.2	40.
94	56.1	23.8	54	97.7	41.4
92	57.5	24.3	52	101.5	43.
90	58.6	24.9	50	105.6	44.8
88	60.	25.4	48	110.	46.6
86	61.3	26.	46	115.	48.6
84	62.8	26 6	44	120.	50.9
82	64 3	27 3	42	125.7	53.3
80	66.	28.	40	132.	56.
78	67.6	28.7	38	138.9	58.9
76	69.4	29.4	36	146.6	62.2
74	71 3	32.2	34	155.3	65.8
72	73.3	31.1	32	165.	70.
70	75 4	32.	30	176.	74.6
68	77.6	32.9	28	188.5	80.
66	80.	33.9	26	203.	86.1
64	82.5	35.	24	220.	93.3
62	85.1	36.1	22	240.	101.8

Resistance of Trains, on a Level, at Different Speeds, in Lbs. Per Ton, of Load.

V = Velocity in miles per hour.
R = Resistance in lbs. per ton of train.

The resistance of curves may be reckoned as 1 per cent. for each degree of the curve occupied by the train.

Imperfections of road vary from 5 to 40 per cent.

Strong side winds, 20 per cent.

Velocity of trains in miles per hour	10	15	20	30	40	50	60	70
Resistance on straight line in lbs. per ton	8½	9¼	10¼	13¼	17¼	22½	29	36½
" with sharp curves and strong winds*	13	14	15½	20	26	34	43½	55

* 50 per cent. added to resistance on straight line.

Adhesive Power of Locomotives.

Adhesion per ton of load on the driving wheels:

When the rails are very dry.....600 lbs. per ton.
When the rails are very wet.....550 " "
In misty weather if the rails are greasy.....300 " "
In frosty or snowy weather.....200 " "

In coupled engines the adhesive force is due to the load on all wheels coupled to the driving wheels.

The adhesive power must exceed the tractive force of an engine on the rails, otherwise the wheels will slip. For loads on driving wheels see below.

Distribution of Weight in Locomotives.

The average distribution of the weights of a six-wheeled locomotive on its wheels is:

Assuming the total weight of the engine in working order to be 1:

	PASSENGER ENGINES.	FREIGHT ENGINES.
Load on leading wheel	.32	.34
" driving wheels	.48	.36
" trailing wheels	.20	.30
Total weight of engine	1.00	1.00

Passenger engines, narrow gauge, average.....from 20 to 30 tons.
Freight engines..... " 24 to 32 "
Broad-gauge engines, first-class..... " 35 "
Incline engines..... " 40 to 47 "

Tractive Power of Locomotives.

Let D = Diameter of cylinder in inches.
" P = Mean pressure of steam in cylinders in lbs. per square inch.
" L = Length of stroke in inches.
" W = Diameter of driving wheel in inches.

Tractive force on rail in lbs. will equal $\frac{D^2PL}{W}$

To Find the Load which an Engine will Take on a Given Incline.

Let G = Resistance due to gravity on the steepest gradient in lbs. per ton. (See Index for "Gradients.")

" R = Resistance due to assumed velocity of train in lbs. per ton. (See Index for "Resistance of Trains.")

" T = Tractive power of engine in lbs. as found above.

" W = Weight of engine and tender in tons.

The load the engine can take in tons including the weight of the wagons but not that of engine and tender will equal $\frac{T}{G+R} = W$.

Log Line.

A log-line is a knotted cord, the distance between the knots being $\frac{1}{120}$ of a nautical mile apart, that is, $50\frac{75}{120}$ feet. The log line is allowed to run out for 30 seconds, which is $\frac{1}{120}$ of an hour, so that the distance between knots on the cord bears the same ratio to a degree that the time does to the hour.

Thus if 8 knots on the log-line run through the hand of the seaman while the sand in the ½-minute glass is running out, it is an indication that the vessel is traveling 8 nautical miles per hour.

A Line.

A line is one-twelfth of an inch, and is usually employed in measuring the diameter of lenses, watch glasses, etc.

Lubricant for Milling Cutters, Etc.

10 lbs. Whale Oil Soap.
15 lbs. Sal. Soda.
2 galls. best Lard Oil.

Shave the soap so that it will dissolve readily and put the whole in a clean 40 gallon cask, and fill with water. Introduce a steam pipe into the water so that it may be boiled. When thoroughly dissolved it is ready for use. Keep warm in winter.

Measuring Land.

A lot 5 yds. wide × 968 yds. long = 1 acre.
" 10 " × 484 " = 1 "
" 40 " × 121 " = 1 "
" 80 " × 60½ " = 1 "
" 70 " × 69 $\frac{1}{7}$ " = 1 "
" 220 ft. long × 198 ft. wide = 1 acre.
" 440 " × 99 " = 1 "
" 110 ft. wide × 396 ft. long = 1 "
" 240 ft. long × 181½ ft. wide = 1 "
43,560 sq. ft. = 1 acre.
4,840 sq. yds. = 1 "

Average Weight of Lumber Per Foot.

One foot	Green	Yellow Pine	weighs 3½ lbs.
"	Dry	"	" 3 "
"	Green	Walnut	" 4½ "
"	Dry	"	" 3½ "
"	Green	Poplar	" 3¼ "
"	Dry	"	" 2¼ "
"	Green	Oak	" 5 "
"	Dry	"	" 4¼ "
"	Green	Ash	" 4½ "
"	Dry	"	" 3½ "

Cherry, same as Walnut. Hickory, same as Oak.

Table of Weight of Lumber.

Pine,	thoroughly seasoned	3,000 lbs.	per 1,000 ft.
Hemlock,	" "	"	" "
Poplar,	" "	"	" "
Black Walnut,	" "	4,000 lbs.	" "
Ash,	" "	"	" "
Maple,	" "	"	" "
Cherry,	" "	"	" "
Pine,	green	"	" "
Hemlock,	"	"	" "
Poplar,	"	"	" "
Black Walnut,	"	4,500 lbs.	" "
Ash,	"	"	" "
Maple,	"	"	" "
Cherry,	"	"	" "
Oak, Hickory and Elm,	dry,	4,000 lbs.	" "
Oak,	" green	5,000 lbs.	" "
Shingles,	green	375 lbs.	per 1,000
Lath,	"	500 lbs.	"

Weight of Logs.

Weight of green logs to scale 1,000 feet, board measure.

Yellow Pine (Southern)		8,000 to 10,000 lbs.
Norway Pine (Michigan)		7,000 to 8,000 lbs.
White Pine (Michigan)	off of stump	6,000 to 7,000 lbs.
	out of water	7,000 to 8,000 lbs.
White Pine (Pennsylvania), bark off		5,000 to 6,000 lbs.
Hemlock (Pennsylvania), bark off		6,000 to 7,000 lbs.

Four acres of water are required to store 1,000,000 feet of logs.

Weight of one cord of seasoned wood, 128 cubic feet per cord.

Hickory or Sugar Maple	4,500 lbs.
White Oak	3,850 lbs.
Beech, Red Oak or Black Oak	3,250 lbs.
Poplar, Chestnut, or Elm	2,350 lbs.
Pine (White or Norway)	2,000 lbs.
Hemlock Bark, dry (1 cord bark got from 1,500 ft. logs)	2,200 lbs.

Mensuration.

To find the area of a parallelogram.

RULE: Multiply the length by the perpendicular height, and the product will be the area.

To find the area of a triangle.

RULE: Multiply the base by the perpendicular height, and half the product will be the area.

To find the area of a triangle whose three sides only are given.

RULE: From half the sum of the three sides subtract each side severally. Multiply the half sum and the three remainders continually together, and the square root of the product will be the area required.

Any two sides of a right angled triangle being given to find the third side.

1. When the two legs are given to find the hypothenuse.

RULE: Add the square of one of the legs to the square of the other, and the square root of the sum will be equal to the hypothenuse.

2. When the hypothenuse and one of the legs are given to find the other leg.

RULE: From the square of the hypothenuse take the square of the given leg, and the square root of the remainder will be equal to the other leg.

To find the area of a trapezium.

RULE: Multiply the diagonal by the sum of the two perpendiculars falling upon it from the opposite angles, and half the product will be the area.

To find the area of a trapezoid, two of whose opposite sides are parallel.

RULE: Multiply the sum of the parallel sides by the perpendicular distance between them, and half the product will be the area.

To find the area of a regular polygon.

RULE: Multiply half the perimeter of the figure by the perpendicular falling from its center upon one of the sides, and the product will be the area.

NOTE: The perimeter of any figure is the sum of all its sides.

To find the area of a regular polygon, when the sides only are given.

RULE: Multiply the square of the sides of the polygon by the number standing opposite to its name in the following table, and the product will be the area.

NO. OF SIDES.	NAME.	MULTIPLIERS.
3	Trigon.	0.433013—
4	Tetragon.	1.000000+
5	Pentagon.	1.720477+
6	Hexagon.	2.598076+
7	Heptagon.	3.633912+
8	Octagon.	4.828427+
9	Nonagon.	6.181824+
10	Decagon.	7.694209—
11	Undecagon.	9.365640—
12	Duodecagon.	11.196152+

The diameter of a circle being given, to find the circumference.

RULE: Multiply the diameter by 3.1416, and the product will be the circumference.

The circumference of a circle being given, to find the diameter.

RULE: Divide the circumference by 3.1416, and the quotient will be the diameter.

To find the length of any arc of a circle.

RULE: To 15 times the square of the chord, add 33 times the square of the versed sine, and reserve the number.

To the square of the chord, add 4 times the square of the versed sine, and the square root of the sum will be twice the chord of half the arc.

Multiply twice the chord of half the arc by 10 times the square of the versed sine, divide the product by the reserved number, and add the quotient to twice the chord of half the arc: The sum will be the length of the arc very nearly.

To find the area of a circle.

RULE: Multiply half the circumference by half the diameter, and the product will be the area.

Or. Multiply the square of the diameter by .7854, and the product will be the area.

Or. Multiply the square of the circumference by .07958, and the product will be the area.

To find the area of a sector.

RULE: Find the length of the arc, by preceding rule, then multiply the radius by the length of the arc of the sector, and half the product will be the area.

Or. As 360 is to the degrees in the arc of a sector, so is the area of the whole circle, whose radius is equal to that of the sector, to the area of the sector required.

To find the area of a segment of a circle.

RULE:

1. Find the area of the sector, having the same arc with the segment, by the last problem.

2. Find the area of the triangle formed by the chord of the segment, and the radii of the sector.

3. Then the sum, or difference, of these areas, according as the segment is greater or less than a semicircle, will be the area required.

To find the area of the space included between the circumference of two concentric circles.

RULE: The difference between the areas of the two circles will be the area of the ring, or space sought

Or. Multiply the sum of diameters by their difference, and this product again by .7854, and it will give the area required.

To find the circumference of an ellipse, the transverse and conjugate diameters being known.

RULE: Multiply the square root of half the sum of the squares of the two diameters by 3.1416, and the product will be the circumference nearly.

To find the area of an ellipse, the transverse and conjugate diameters being given.

RULE: Multiply the transverse diameter by the conjugate, and the product again by .7854 and the result will be the area.

To find the area of a parabola, its base and height being given.

RULE: Multiply the base by the height, and ⅔ of the product will be the area required

To find the area of a frustrum of a parabola.

RULE: Divide the difference of the cubes of the two ends of the frustrum by the difference of their squares, and this quotient multiplied by ⅔ of the altitude will give the area required.

To find the solidity of a cube, the height of one of its sides being given.

RULE: Multiply the side of the cube by itself, and that product again by the side, and it will give the solidity required.

To find the solidity of a prism.

RULE: Multiply the area of the base into the perpendicular height of the prism, and the product will be the solidity.

To find the convex surface of a cylinder.

RULE: Multiply the periphery or circumference of the base by the height of the cylinder, and the product will be the convex surface required.

To find the solidity of a cylinder.

RULE: Multiply the area of the base by the perpendicular height of the cylinder, and the product will be the solidity.

To find the convex surface of a right cone.

RULE: Multiply the circumference of the base by the slant height, and half the product will be the surface required.

To find the convex surface of the frustrum of a right cone.

RULE: Multiply the sum of the perimeters of the two ends by the slant height of the frustrum, and half the product will be the surface required.

To find the solidity of a cone or pyramid.

RULE: Multiply the area of the base by one-third of the perpendicular height of the cone or pyramid, and the product will be the solidity.

To find the solidity of a frustrum of a cone or pyramid, the diameter of the two ends and the height being given.

RULE: Add together the square of the diameter of the greater end, the square of the diameter of the less end, and the product of the two diameters; multiply the sum by .7854, and the product by the height; ⅓ of the last product will be the solidity.

To find the solidity of the frustrum of a pyramid whose sides are regular polygons.

RULE: Add together the square of a side of the greater end, the square of a side of the less end, and the product of these two sides; multiply the sum by the proper number in Table of Polygons. and the product by the height; ⅓ of the last product will be the solidity.

To find the solidity of the frustrum of a pyramid when the ends are not regular polygons.

RULE: Add together the areas of the two ends and the square root of their product; multiply the sum by the height, and ⅓ of the product will be the solidity.

To find the solidity of a wedge.

RULE: Add twice the length of the base to the length of the edge, and reserve the number.

Multiply the height of the wedge by the breadth of the base, and this product by the reserved number; $\frac{1}{6}$ of the last product will be the solidity.

To find the solidity of a prismoid.

RULE: To the sum of the areas of the two ends add four times the area of a section parallel to and equally distant from both ends, and this last sum multiplied by $\frac{1}{6}$ of the height will give the solidity.

To find the convex surface of a sphere.

RULE: Multiply the diameter of the sphere by its circumference, and the product will be the convex superficies required.

To find the solidity of a sphere or globe.

RULE: Multiply the cube of the diameter by .5236, and the product will be the solidity.

To find the solidity of the segment of a sphere.

RULE: To three times the square of the radius of its base add the square of its height; and this sum multiplied by the height, and the product again by .5236, will give the solidity.

To find the solidity of the frustrum of a sphere.

RULE: To the sum of the squares of the radii of the two ends, add one-third of the square of their distance, or of the breadth of the zone, and this sum multiplied by the said breadth, and the product again by 1 5708, will give the solidity.

To find the solidity of a spheroid.

RULE: Multiply the square of the revolving axe by the fixed axe, and this product again by .5236, and it will give the solidity required.

NOTE: .5236 is equal to $\frac{1}{6}$ of 3.1416.

To find the solidity of the middle frustrum of a spheroid, its length, the middle diameter, and that of either of the ends, being given.

When the ends are circular, or parallel to the revolving axis:

RULE: To twice the square of the middle diameter add the square of the diameter of either of the ends, and this sum multiplied by the length of the frustrum, and the product again by .2618, will give the solidity.

NOTE: .2618 equals $\frac{1}{12}$ of 3.1416.

To find the solidity of a tetraedron.

RULE: Multiply $\frac{1}{12}$ of the cube of the linear side by the square root of 2, and the product will be the solidity.

To find the solidity of an octaedron.

RULE: Multiply $\frac{1}{3}$ of the cube of the linear side by the square root of 2, and the product will be the solidity.

To find the solidity of a dodecaedron.

RULE: To 21 times the square root of 5 add 47, and divide the sum by 40; then the square root of the quotient being multiplied by 5 times the cube of the linear side will give the solidity required.

Table.

Surface and Solidities of the Regular Bodies.

NO. OF SIDES.	NAMES.	SURFACES.	SOLIDITIES.
4	Tetraedron	1.73205	0.11785
6	Hexaedron	6.00000	1.00000
8	Octaedron	3.46410	0.47140
12	Dodecaedron	20.64578	7.66312
20	Icosaedron	8.66025	2.18169

The superficies and solidity of any of the five regular bodies may be found as follows:

RULE: Multiply the above tabular area by the square of the linear edge, and the product will be the superficies.

Or: Multiply the tabular solidity by the cube of the linear edge, and the product will be the solidity.

To find the convex superficies of a cylindric ring.

RULE: To the thickness of the ring add the inner diameter, and this sum being multiplied by the thickness, and the product again by 9.8696, will give the superficies required.

To find the solidity of a cylindric ring.

RULE:

To the thickness of the ring add the inner diameter, and this sum being multiplied by the square of half the thickness, and the product again by 9.8696, will give the solidity.

Properties of the Circle.

Diameter $\times$ 3.14159 = circumference.
" $\times$ .8862 = side of an equal square.
" $\times$ .7071 = side of an inscribed square.
Diameter $^2 \times$ .7854 = area of circle.
Radius $\times$ 6.28318 = circumference.
Circumference $\div$ 3.14159 = diameter.

Diameter of circle of equal periphery as square = side of square $\times$ 1.2732.

Length of arc of a circle = the number of degrees $\times$ diameter $\times$ 0 008727.

Circumference of a circle whose diameter is 1 = 3.14159265+.

The circle contains a greater area than any plane figure, bounded by an equal perimeter or outline.

The areas of circles are to each other as the squares of their diameters.

Any circle whose diameter is double that of another circle contains four times the area of the other.

Area of a circle is equal to the area of a triangle whose base equals the circumference, and perpendicular equals the radius.

Diameter × .8862 = side of an equal square.
Circumference × .2821 = " " " "
Diameter × .7071 = " " the inscribed square.
Circumference × .2251 = " " " " "
Area × .6366 = " " " " "
Side of a square × 1.4142 = diameter of its circumscribed circle.
" " " × 4.443 = circumference of its circumscribed circle.
" " " × 1.128 = diameter of an equal circle.
" " " × 3.545 = circumference of an equal circle.

The circle is regarded as composed of an infinite number of triangles whose common altitude is the radius, and the sum of whose bases is the circumference.

Hence, the area = ½ the sum of bases multiplied by the altitude; or,

Area of circle = ½ circumference × radius.

Area of circle = ¼ circumference × diameter.

The perimeter of a polygon of 1536 sides equals 6.28318092.

The perimeter of a polygon of 3072 sides equals 6.28318420.

If the distance from center to vertices be taken ½ instead of 1, the results will be 3.141590 + and 3.141592 +. Carried to 18 decimal places 3.141592653589793238.

To find the size of a tank to hold a certain number of gallons.

RULE: Multiply the required number of gallons by 231. Reduce this product to cubic feet, by dividing by 1728. Extract the cube root of the quotient, and the result will be the length and breadth of one side, when the tank is in the form of a cube.

To find the weight of a safety valve ball, when scales are not handy.

RULE: Multiply the diameter of the ball into itself twice, and divide the product by 1377; this will give the weight very nearly.

To find the largest square that can be cut from a circular sheet of given size.

RULE: Multiply the diameter by 0.7071, and the product will be the side of the square.

To find the cubic contents of a tapering vessel.

RULE: Add together the square of the top and bottom diameter. Add to this the product of one diameter, multiplied by the other, and multiply the sum total by .7854, and this product by one-third of the height of the vessel; the result will give the contents in cubic inches or feet, as the dimensions may be given.

EXAMPLE:

What is the capacity, in cubic inches, of a tank 60 inches diameter at the top, 50 inches diameter at the bottom, and 60 inches high?

$$60 \times 60 = 3600$$
$$50 \times 50 = 2500$$
$$60 \times 50 = 3000$$
$$9100$$

$9100 \times .7854 = 7147.1400$

$7147.1400 \times 20 = 142942.8000$ cubic inches. Answer.

And $\frac{142942.8000}{231} = 619$ gallons nearly.

METRIC SYSTEM OF LENGTHS.

One Millimeter =	0.001	Meter =	0.039 inches,
One Centimeter =	0.01	" =	0.393 "
One Decimeter =	0.1	" =	3.937 "
One Meter =	1	" =	39.37 "
One Decameter =	10	" =	393.7 "
One Hectometer =	100	" =	328 feet.
One Kilometer =	1000	" =	3280 "
One Minameter =	10000	" =	6.2137 miles.

The Meter is the 10,000,000 part of the distance on the earth's surface from the equator to either pole, or 39.37079 inches.

The Kilometer is commonly used for measuring long distances, and is about ⅝ of a mile (.62135 mile).

Comparative Table of French and United States Measures.

MEASURES.	NO.
One gramme = grains	15.433
One kilogramme = pounds avoirdupois	2.2047
One tonne = tons of 2240 lbs	0.9843
One tonne = tons of 2000 lbs	1.1024
One millimetre = inch	0.0394
One metre = feet	3.2807
One kilometre = mile	0.6213
One square millimetre = square inch	0 00155
One square metre = square feet	10 763
One are (100 square metres) = acres	0.02471
One square kilometre = square mile	0.3861
One cubic centimetre = cubic inch	0.0610
One cubic metre or stere = cubic feet	35.3105
One cubic metre = cubic yards	1 3078
One litre (one cubic decimetre) = cubic inches	61.017
One litre = quarts, dry measure	0.908
One litre = quarts, liquid or wine measure	1.0566
One kilogrammetre = foot pounds	7.2331
One kilogramme per metre = pounds per foot	0.6720
One kilogramme per square millimetre = pounds per square inch	.1422
One kilogramme per square metre = pounds per square foot	0.2048
One kilogramme per cubic metre = pounds per cubic foot	0.0624
One degree centigrade = degrees Fahrenheit	1.8

Comparative Table of United States and French Measures.

MEASURES.	NO.
One grain = gramme	0.0648
One pound avoirdupois = kilogramme	0.4536
One ton of 2240 lbs = tonnes	1.0160
One ton of 2000 lbs = tonne	0.9071
One inch = millimetres	25.400
One foot = metre	0.3048
One mile = kilometres	1.6094
One square inch = square millimetres	645.2
One square foot = square metre	0.09291
One acre = are (100 square metres)	40.47
One square mile = square kilometres	2.590
One cubic inch = cubic centimetres	16.39
One cubic foot = cubic metre	0.02832
One cubic yard = cubic metre	0.7646
One quart dry measure = litres	1.101
One quart liquid or wine measure = litre	0.9465
One foot pound = kilogrammetre	0.1383
One pound per foot = kilogrammes per metre	1.488
One thousand pounds per square inch = kilogramme per square millimetre	0.703
One pound per square foot = kilogrammes per square metre	4.882
One pound per cubic foot = kilogrammes per cubic metre	16.02
One degree Fahrenheit = degree centigrade	0.5556

In Relative Malleability, the Leading Metals Run in the Following Order.

Gold, Silver, Copper, Tin, Platinum, Lead, Zinc, Iron.

Specific Resistances of Metals.

Copper	1.00	Tin Wire	6.80
Silver	.98	Zinc Wire	3.70
Gold	1.13	Brass Wire	3.88
Iron	5.63	German Silver Wire	11.30
Lead	10.76	Nickel Wire	7.70
Mercury	50.00	Calcium Wire	2.61
Palladium	5.50	Aluminium Wire	1.75
Platinum	6.78		

The metal Aluminum was discovered by F. Wohler in 1827.
Arsenic was discovered by Schroder in 1694.

Conductivity and Non-Conductivity.

1 Dry Air (Worst)
2 Paraffine.
3 Hard Rubber.
4 Shellac.
5 India Rubber.
6 Gutta Percha.
7 Sulphur.
8 Glass.
9 Silk.
10 Dry Paper
11 Porcelain.
12 Dry Wood.
13 Dry Ice.
14 Water.
15 Saline Solutions.
16 Acids.
17 Charcoal or Coke.
18 Mercury.
19 Lead.
20 Tin.
21 Iron.
22 Platinum.
23 Zinc.
24 Gold.
25 Copper.
26 Silver.

Weight of a Square Foot of Cast and Wrought Iron, Copper Lead, Brass and Zinc.

From $\frac{1}{16}$ to 1 inch in thickness.

Thickness.	Cast Iron.	Wrought Iron.	Copper.	Lead.	Brass.	Zinc.
Inch.	Lbs.	Lbs.	Lbs.	Lbs.	Lbs.	Lbs.
$\frac{1}{16}$	2.346	2.517	2.89	3.691	2.675	2.34
$\frac{1}{8}$	4.693	5.035	5.781	7.382	5 35	4.68
$\frac{3}{16}$	7.039	7.552	8.672	11.074	8.025	7 02
$\frac{1}{4}$	9.386	10.07	11.562	14.765	10.7	9.36
$\frac{5}{16}$	11.733	12.588	14.453	18.456	13.375	11.7
$\frac{3}{8}$	14.079	15.106	17.344	22.148	16.05	14.04
$\frac{7}{16}$	16.426	17.623	20.234	25.839	18.725	16.34
$\frac{1}{2}$	18.773	20.141	23.125	29.53	21.4	18.72
$\frac{9}{16}$	21.119	22.659	26.016	33.222	24.075	
$\frac{5}{8}$	23.466	25.176	28.906	36.913	26.75	
$\frac{11}{16}$	25.812	27.694	31.797	40.604	29.425	
$\frac{3}{4}$	28.159	30.211	34.088	44.296	32.1	
$\frac{13}{16}$	30.505	32.729	37.578	47.987		
$\frac{7}{8}$	32.852	35.247	40.469	51.678		
$\frac{15}{16}$	35.199	37.764	43.359	55.37		
1	37.545	40.282	46.25	59.061		

NOTE.—The wrought iron and the copper is that of hard rolled plates.

Nitro-glycerine was discovered by Nobel, a Swedish chemist. Nitro-glycerine is made by mixing sulphuric and nitric acid with sweet glycerine, the same that is used by the ladies to prevent chapped hands. Mixing the acids and glycerine is where the great danger lies in the making of nitro-glycerine. The mixing tank, or agitator, as it is called by dynamite makers, is a large steel tank, filled inside with many coils of lead pipe, through which, while the mixing is in progress, a constant flow of ice water is maintained. This flow of ice water is used to keep the temperature of the mix below eighty-five degrees, as above that point it would explode, and a hole in the ground would mark where the factory had been. The nitro-glycerine is stored in large earthenware tanks, which are usually sunk in the ground to guard against blows or severe concussion.

Weights of Metals.

Kind of Metal.	Weight of one cubic inch in pounds.	Weight of one cubic foot in pounds.
Brass, cast	0.298	515.
Brass, rolled	0.308	533.
Bronze, gun metal	0.303	524.
Copper, cast	0.311	537.
Copper, rolled	0.318	549.
Gold, hammered	0.700	1210.
Iron, cast, average	0.257	444.
Iron, wrought, average	0.278	480.
Lead, rolled	0.412	712.
Platinum, rolled	0.798	1350.
Silver, cast	0.379	655.
Steel, cast, average	0.283	489.
Steel, wrought	0.286	494.
Tin, average	0.267	461.
Zinc, cast, average	0.252	435.
Zinc, rolled	0.260	449
Lead, cast	0.4106	709.5
Mercury, 60°	0.4911	848.7
Brass, wire	0.3033	524.

Muntz Metal Bars.

WEIGHTS PER LINEAL FOOT.

Size, inches.	Yellow Metal.		Size, inches.	Yellow Metal.	
	Round.	Square.		Round.	Square.
3/8	.41	.50	1 7/8	10.18	12.68
7/16	.55	.69	2	11.58	14.35
1/2	.72	.90	2 1/8	13.12	16.40
9/16	.92	1.15	2 1/4	14.64	18.20
5/8	1.13	1.40	2 3/8	16.36	20.40
11/16	1.37	1.72	2 1/2	18.08	22.60
3/4	1.63	2.05	2 3/4	21.88	27.24
13/16	1.91	2.40	3	26.04	32.52
7/8	2.22	2.75	3 1/4	30.60	38.20
15/16	2.54	3.15	3 1/2	35.48	44.00
1	2.90	3.65	3 3/4	40.72	50.72
1 1/8	3.66	4.55	4	46.32	57.40
1 1/4	4.52	5.65	4 1/4	52.48	65.60
1 3/8	5.47	6.81	4 1/2	58.66	72.80
1 1/2	6.51	8.13	4 3/4	65.44	81.60
1 5/8	7.65	9.55	5	72.32	90.40
1 3/4	8.87	11.00			

FLOUR AND CORN MILLS.

Roller Corn Mill.

Size.	Capacity per Hour.		Power Required.
	Corn meal.	Mixed Feed.	
6x12	12 to 15 bu.	25 to 30 bu.	4 horse-power.
6x15	16 to 20 bu.	35 to 40 bu.	5 "
6x18	20 to 25 bu.	40 to 45 bu.	6 "
9x14	30 to 35 bu.	60 to 70 bu.	7 "
9x18	35 to 45 bu.	70 to 85 bu.	8 "
9x24	45 to 50 bu.	85 to 100 bu.	10 "

Two Pair High Roller Corn Mill.

Size.	Capacity per Hour.		Power Required.
	Meal.	Feed.	
6x12	12 to 15 bu.	25 to 30 bu.	4 to 6 h.-p.
6x16	20 to 25 bu.	30 to 40 bu.	6 to 8 "
7x14	20 to 25 bu.	30 to 40 bu.	7 to 8 "
7x18	30 to 50 bu.	70 to 80 bu.	7 to 9 "
7x24	40 to 60 bu.	80 to 100 bu.	10 to 12 "

Upper Runner Buhr Mill.

Size of Stones.	Grinding Capacity.		Size of Pulley	Speed.	H.-P.
	Corn. Bushel per hour.	Wheat. Bushel per hour.			
30 in.	20 to 25	10 to 12	20x10	360	10
36 in.	25 to 30	14 to 17	24x10	300	12
42 in.	35 to 40	19 to 21	30x10	240	15

Under Runner Buhr Mill.

Size of Stones.	Grinding Capacity.		Speed.	H.-Power.
	Corn. Bushel per hour.	Size of Pulley.		
18 inch.	8 to 10	14 x 7	600	4
20 "	10 to 12	14 x 7	500	5
22 "	12 to 15	16 x 7	500	5
24 "	15 to 18	16 x 7	480	6
26 "	18 to 20	20 x 8	440	8
30 "	20 to 25	20 x 10	400	10
36 "	25 to 30	24 x 10	330	12

Corn and Wheat Mills. Pulley Driven.

Size.	Size of Pulley Inches.		Number of revolutions per minute.	Requisite h.-p	Capacity per hour. Bushels.	Weights.
Diameter of stone. Ins.	Diam.	Face.				
18	10x	8½	400 to 700	6	8 to 12	612
20	12x	8½	400 to 700	6	10 to 15	700
22	14x	8½	400 to 700	8	10 to 16	1,050
24	16x	9½	350 to 600	10	12 to 20	1,210
26	16x	9½	350 to 600	12	15 to 25	1,300
28	18x	10½	350 to 500	15	18 to 30	1,450
30	18x	10½	350 to 500	18	20 to 40	1,650
36	24x	12½	300 to 400	30	40 to 60	2,000

Titanium was discovered by Gregoi, in titanic iron, in 1789, in Cornwall, England.

The metal Thorium was discovered by Berzelius in 1828.

The metal Thallium was discovered by Crookes in 1861.

Miner's Inch.

In California the term "miner's inch" is employed to express that quantity of water which under a given head or pressure, as 4, 7, 9, etc., inches, will flow through each square inch of the discharge opening; or, in other words, which will flow through each square inch of cross-section of a stream of water.

The quantity of water so flowing in a minute, an hour, twenty-four hours, etc., is designated "minute inch," "hour inch," "twenty-four hour inch," etc., according to the length of time specified.

Under the head "Water Rights," the laws of California provide: "That he (the locator) claims the water there flowing to the extent of (*specified*) inches measured under a 4-inch pressure."

On these data the value of the statutory miner's inch is as follows:

	CU. FEET.
For one second, "second inch"	0.02
For one minute, "minute inch"	1.20
For one hour, "hour inch"	72.00
For twenty-four hours, "24-hour inch"	1,728.00

If a cubic foot be divided by the flow in one second, there will result the number of miner's inches equal to the discharge of 1 cubic foot per second.

Thus $\frac{1}{0.02} = 50$ statutory miner's inches; that is, 50 statutory miner's inches are equal to 1 cubic foot flow per second.

And 38.74 miner's inches under a 7-inch pressure are equal to 1 cubic foot flow per second. See following table.

Flow of Water Through Vertical Rectangular Openings.

Head on Center.	Flow Per Second Through 1 Square Inch Opening.	Minute Inch Flow.	Hour Inch Flow.	24-Hour Inch Flow.	1 Cubic Foot Flow Per Second.
Inches.	Cubic Feet.	Cubic Feet.	Cubic Feet.	Cubic Feet.	Miner's Ins.
3	.0169	1.014	60.84	1,460	59 18
4	.0195	1.173	70.42	1,690	51.13
5	.0218	1.309	78.54	1,885	45.86
6	.0239	1.434	86 00	2,064	41.85
7	.0258	1.548	92.92	2,230	38.74
8	.0276	1.655	99.33	2,384	36.24
9	.0293	1.755	105 33	2,528	34.17
10	.0308	1.851	111.04	2,665	32.42
11	.0323	1.941	116 46	2,795	30.91
12	.0338	2.028	121.67	2,920	29.59

Table of Mortality Based on American Experience.

AGE, YEARS.	EXPECTATION OF LIFE. YEARS.	AGE, YEARS.	EXPECTATION OF LIFE. YEARS.
10	48.72	53	18.79
11	48.08	54	18.69
12	47.44	55	17.40
13	46.82	56	16.72
14	46.16	57	16.05
15	45.50	58	15.39
16	44.85	59	14.74
17	44.19	60	14.09
18	43.53	61	13.47
19	42.87	62	12.86
20	42.20	63	12.26
21	41.53	64	11.68
22	40.85	65	11.10
23	40.17	66	10.54
24	39.49	67	10.00
25	38.81	68	9.48
26	38.11	69	8.89
27	37.43	70	8.48
28	36.73	71	8.00
29	36.03	72	7.54
30	35.33	73	7.10
31	34.62	74	6.68
32	33.92	75	6.28
33	33.21	76	5.88
34	32.50	77	5.48
35	31.78	78	5.10
36	31.07	79	4.74
37	30.35	80	4.38
38	29.62	81	4.04
39	28.90	82	3.71
40	28.18	83	3.30
41	27.45	84	3.08
42	26.72	85	2.77
43	25.99	86	2.47
44	25.27	87	2.19
45	24.54	88	1.93
46	23.80	89	1.69
47	23.08	90	1.42
48	22.36	91	1.19
49	21.63	92	.98
50	21.91	93	.80
51	20.20	94	.64
52	19.49	95	.50

The first steamboat plied the Hudson in 1807.
The first sawmaker's anvil was brought to America in 1819.
The first use of a locomotive in this country was in 1820.
Kerosene was first used for lighting purposes in 1826.
The first horse railroad was built in 1826-7.
The first lucifer match was made in 1829.
The first iron steamship was built in 1830.
The first air pump was made in 1650.
The first newspaper advertisement appeared in 1652.
The first copper cent was coined in New Haven in 1687.

STRENGTH OF MATERIALS.

Ultimate Tensile Strength in Lbs. per Square Inch.

METALS.	Average.
Brass, cast	18,000
" wire	49,000
Bronze or gun metal	36,000
Copper, cast	19,000
" sheet	30,000
" wire	60,000
Iron, cast, 13,400 to 29,000	16,500
" wrought, ordinary bar	45,000
" " bar, double refined	50,000 to 54,000
" " boiler plates	48,000 to 56,000
" wire	70,000 to 100,000
" " ropes	90,000
Lead, cast	2,000
" pipe	1,650
Steel	65,000 to 120,000
Tin	4,600
Zinc	3,500

A bar of wrought iron will expand or contract 151200th of its length for each degree of heat; and assuming that the extreme range of temperature in this country is 140°, it will expand or contract with this change the 1080th of its length, which is equivalent to a force of 20,740 lbs., or 9¼ tons per square inch of section. The tensile strength is increased, in from 1 to 6 reheatings and rollings, from 43,904 to 61,824 lbs., and decreased again to 43,904 lbs. in from 6 to 12.

The tensile strength at different temperatures is as follows: 60°, 1; 114°, 1.14; 212°, 1.2; 250°, 1.32; 270°, 1.35; 325°, 1.41; 435°, 1.4.

TIMBER, SEASONED.	
Ash, American	11,000 to 14,000
Beech "	15,000 to 18,000
Box	20,000
Cedar, American, red	10,300
Fir or Spruce	10,000 to 13,600
Hickory, American	12,800 to 18,000
Mahogany	8,000 to 21,000
Oak, American, white	18,000
Pine, American, white, red, and pitch	10,000
" " long leaf yellow	12,600 to 19,200
Poplar	7,000
Walnut, black	16,000

Ultimate Resistance to Compression.

METALS.	
Brass, cast	10,300
Iron, "	82,000 to 145,000
" wrought	36,000 to 40,000

Timber, Seasoned, Compressed in the Direction of the Grain.

Ash, American	4,400 to 5,800
Beech, "	5,800 to 6,900
Box	10,300
Cedar, American, red	6,000
Fir or Spruce	5,100 to 6,800
Oak, American, white	7,200 to 9,100
Pine, " "	5,000 to 5,600
" " yellow	6,000
Walnut, black	7,500

Brick, weak	550 to 800
" strong	1,100
" fire	1,700
Brickwork, ordinary, in cement	300 to 450
" best	1,000
Granite	5,500 to 11,000
Limestone	4,000 to 11,000
Sandstone, ordinary	4,000

Ultimate Resistance to Shearing.

Iron, cast	27,700
" wrought, along the fiber	45,000
Steel	67,000

To find the breaking load in tons for a horizontal hollow wrought iron welded tube, supported at both ends and loaded at the center.

Rule: Multiply the area of metal in square inches by the mean depth of tube in inches, and this product by the constant number 1.09. Divide this last product by the clear span in feet, the quotient will give the load in tons. When the load is evenly distributed over the entire length, it may be twice as heavy as a center load.

THE RARER METALS AND THEIR COST.

Aluminum (Metallic)	per lb	$ 1.00
Arsenic	" "	.20
Barium	" "	975.00
Bismuth	" "	2.40
Cadmium	" "	1.25
Calcium	" per oz	150.00
Cerium	" "	160.00
Chromium	" per lb	200.00
Cobalt	" "	6.00
Didymium	" per oz	160.00
Erbium	" "	140.00
Gallium	" "	3,250.00
Glucinum	" "	250.00
Indium	" "	158.00
Iridium	" per lb	650.00
Lanthanum	" per oz	175.00
Lithium	" "	160.00
Magnesium, per lb		4.50
Manganese (Metallic)	per lb	1.10
Molybdenum	" per oz	6.00

Niobium	(Metallic)	per oz	128.00
Osmium	"	per lb	640.00
Palladium	"	"	400.00
Platinum	"	"	130.00
Potassium	"	"	32.00
Rhodium	"	"	512.00
Ruthenium	"	per oz	112.00
Rubidium	"	"	200.00
Selenium	"	"	3.00
Sodium	"	per lb	3.00
Strontium	"	per oz	128.00
Tantallum	"	"	144.00
Telurium	"	"	9.00
Thallium	"	"	3.00
Titanium	"	"	32.00
Thorium	"	"	272.00
Tungsten	"	per lb	1.25
Vanadium	"	per oz	320.00
Yttrium	"	"	144.00
Zirconium	"	"	240.00

The price of rarer metals is reduced, as improved methods for their production are discovered from time to time. Thus, aluminum, which a few years ago cost $10 per pound, is now quoted at $1 per pound, in lots of 1,000 pounds.

METALS.

Order of Hardness.	Order of Tenacity.	Malleability.	Ductility.
Platinum.	Lead, 1.	Gold.	Gold.
Iron.	Tin, 1.3	Silver.	Silver.
Antimony.	Gold, 5.6	Copper.	Platinum.
Copper.	Zinc, 8.	Platinum.	Iron.
Silver.	Silver, 8.9	Iron.	Copper.
Gold.	Platinum, 13.	Tin.	Zinc.
Zinc.	Copper, 17.	Zinc.	Tin.
Aluminum.	Iron, 26.	Lead.	Lead.
Tin.			
Silenium.			
Bismuth.			
Lead.			

A metal that expands in cooling is composed of—

Lead, 9 parts.
Antimony, 2 parts.
Bismuth, 1 part.

Babbit Metal.

50 pounds of tin.
2 " " copper.
4 " " antimony.

First melt copper. Then add antimony, then about ⅓ of the tin, until all are well mixed.

The following table presents a list of metals arranged according to weight—the weight of water being the unit. The table also presents the quality of each metal in the most useful particulars.

Atomic Weight.	Specific Gravity.	Name.	Specific Heat.	Temp. of Fusion, F.	Linear expansion, 32 to 212deg., F.	Electric Conductivity.	Heat Conductibility.
199.2	22.477	Osmium	.0311	3992	$\frac{1}{152}$	.....	.....
198.	22.4	Iridium	.0326	3992	$\frac{1}{1429}$	.....	.....
197.4	21.46	Platinum	.0324	3592	$\frac{1}{1157}$	10.5	.84
197.	19.265	Gold	.0324	2990	$\frac{1}{645}$	77.9	.532
118.8	18.33	Uranium	.0619	3632	.....	.....	.....
184.	16.54	Tungsten	.0334	4352	.....	.....	.....
200.	13.595	Mercury	.0333	—40	.....	1.63	.....
104.4	12.26	Ruthenium	.0611	3935	$\frac{1}{1038}$	.....	.....
104.4	12.1	Rhodium	.0588	3935	$\frac{1}{1176}$	.....	.....
204.	11.86	Thallium	.0335	529	$\frac{1}{331}$	9.30	.....
106.6	11.4	Palladium	.0593	3632	$\frac{1}{1000}$	.....	.....
207.	11.256	Lead	.0314	617	$\frac{1}{351}$	8.32	.85
108.	10.4	Silver	.0570	1832	$\frac{1}{524}$	100.	1.00
208.	9.82	Bismuth	.0308	507	$\frac{1}{719}$	1.19	.....
63.4	8.94	Copper	.0952	1990	$\frac{1}{581}$	94.4	.736
92.	8.6	Molybdenum	.0722	3632	.....	.....	.....
112.	8 546	Cadmium	.0506	442	$\frac{1}{428}$	22.10	.....
58.	8.5	Cobalt	.1069	3272	$\frac{1}{805}$	17.22	.....
58.	8.297	Nickel	.109	2912	$\frac{1}{781}$	13.11	.....
56.	7.844	Iron	.1138	2012	$\frac{1}{819}$	16.81	.119
178.	7.5	Thorium	.....	.....	.....	.....	.....
75.6	7.42	Indium	.2934	176	$\frac{1}{2237}$	.....	.....
116.	7.29	Tin	.0562	442	$\frac{1}{462}$	11.5	.154
55.	7.14	Manganese	.0722	3452	$\frac{1}{371}$	.....	.....
65.	6.915	Zinc	.0956	707	$\frac{1}{340}$	29.	.190
52.	6.81	Chromium	.100	3992	.....	.....	.....
92.	6.728	Cerium	.0447	.....	.....	.....	.....
120.3	6.715	Antimony	.0508	842	$\frac{1}{923}$	33.76	.....
95.	6.544	Didymium	.0456	.....	.....	.....	.....
94.	6.3	Niobium	.....	.....	.....	.....	.....
128.	6.25	Tellurium	.0475	752	$\frac{1}{596}$	.....	.....
93.6	6.163	Lanthanum	.0448	.....	.....	.....	.....
.....	5.9	Gallium	.079	86	.....	.....	.....
75.	5.7	Arsenic	.....	.....	$\frac{1}{1788}$	.....	.....
51.37	5.5	Vanadium	.....	3992	.....	.....	.....
89.6	4.15	Zirconium	.....	887	.....	.....	.....
137.	4.	Barium	.....	1562	.....	.....	.....
27.5	2.583	Aluminum	.2143	.....	$\frac{3}{450}$	19.6	.....
87.5	2.5	Strontium	.....	.....	.....	6.71	.....
94.	2.1	Columbium	.....	.....	.....	.....	.....
4.7	2.	Glucinum (Benglium)	.64	.....	.....	.....	.....
133.	1.88	Caesium	.....	.....	.....	.....	.....
24.	1.743	Magnesium	.250	1382	.....	25.47	.....
40.	1.578	Calcium	.....	1562	.....	22.14	.....
85.4	1.52	Rubidium	.....	135	.....	.....	.....
.....	1.00	Water	.....	.....	.....	.....	.....
23.	.9735	Sodium	.293	194	.....	37.42	.....

Atomic Weight.	Specific Gravity.	Name.	Specific Heat.	Temp. of Fusion, F.	Linear expansion, 32 to 212, deg. F.	Electric Conductivity.	Heat Conductibility.
39.1	.875	Potassium	.166	136	.....	20.83	.....
7.	.594	Lithium	.9408	374	.....	19.	.....
112.6	.....	Erbium	.....	.....	.....	.....	.....
79.4	.....	Selenium	.0701	.....	$\frac{1}{271}$	.....	.....
50.	.....	Titanium	.....	.....	.....	.....	.....
182.	.....	Tantalum	.....	.....	.....	.....	.....
61.7	.....	Yttrium	.....	.....	.....	.....	.....
.....	.....	Terbium	.....	.....	.....	.....	.....

Mile.

1 Statute mile equals ..... 5,280 feet.
1 Geographic mile equals ..... 6,072 "
1 German short mile equals ..... 6,859 yards.
1 German long mile equals ..... 10,126 "
1 German geographical mile equals ..... 8,100 "
1 Irish mile equals ..... 2,240 "
1 Swiss mile equals ..... 9,153 "
1 Roman mile equals ..... 1,628 "
1 Prussian mile equals ..... 8,237 "
1 Swedish mile equals ..... 11,700 "
1 Danish mile equals ..... 8,244 "

Saw Mills.

It takes about the same amount of power to cut a foot of lumber in a given time, no matter whether it be muley, gang or circular saw. To drive a 60 inch saw to cut 2,000 feet per hour, will require 40-horse power and in that proportion as the power is reduced.

Minerals.

The relative hardness of minerals is shown in the following table, the diamond being the hardest of all minerals.

Degree 1 ..... Talc.
" 2 ..... Gypsum.
" 3 ..... Calcite.
" 4 ..... Fluor Spar.
" 5 ..... Apatite.
" 6 ..... Feldspar.
" 7 ..... Quartz.
" 8 ..... Topaz.
" 9 ..... Corundum.
" 10 ..... Diamond.

Magic Table.

A person's age may be found thus: Let the person point out the columns in which their age, at nearest birthday, occurs. Add together the figures at head of columns and the sum will be the age sought for.

1	2	4	8	16	32
3	3	5	9	17	33
5	6	6	10	18	34
7	7	7	11	19	35
9	10	12	12	20	36
11	11	13	13	21	37
13	14	14	14	22	38
15	15	15	15	23	39
17	18	20	24	24	40
19	19	21	25	25	41
21	22	22	26	26	42
23	23	23	27	27	43
25	26	28	28	28	44
27	27	29	29	29	45
29	30	30	30	30	46
31	31	31	31	31	47
33	34	36	40	48	48
35	35	37	41	49	49
37	38	38	42	50	50
39	39	39	43	51	51
41	42	44	44	52	52
43	43	45	45	53	53
45	46	46	46	54	54
47	47	47	47	55	55
49	50	52	56	56	56
51	51	53	57	57	57
53	54	54	58	58	58
55	55	55	59	59	59
57	58	60	60	60	60
59	59	61	61	61	61
61	62	62	62	62	62
63	63	63	63	63	63

EXAMPLE: Suppose a person's age to be 54 years. We find 54 in the second, third, fifth and sixth columns. Then we add together 2, 4, 16 and 32, which equal 54.

Horse Power Required for Driving Machinery in Good Order.

An 18-inch swing engine lathe ..... $\frac{1}{10}$-horse power.
A 30-inch swing engine lathe ..... $\frac{1}{5}$ "
A 16-inch swing hand lathe ..... $\frac{1}{10}$ "
A 36-inch swing drill ..... $\frac{1}{4}$ "
A 16-inch swing drill ..... $\frac{1}{5}$ "
A 6-foot planer ..... $\frac{1}{4}$ "
A 12-foot planer ..... $\frac{1}{2}$ "
A 12-inch shaper ..... $\frac{1}{4}$ "
Countershaft for each tool ..... $\frac{1}{10}$ "

Useful Numbers for Rapid Approximation.

Feet	× .00019	= miles.
Yards	× .0006	= miles.
Links	× .22	= yards.
Links	× .66	= feet.
Feet	× 1.5	= links.
Square inches	× .007	= square feet.
Circular inches	× .00546	= square feet.
Square feet	× .111	= square yards.
Acres	× .4840	= square yards.
Square yards	× .0002066	= acres.
Width in chains	× 8.	= acres per mile.
Cube feet	× .04	= cube yards.
Cube inches	× .00058	= cube feet.
U. S. bushels	× .0495	= cube yards.
U. S. bushels	× 1.2446	= cube feet.
U. S. bushels	× 2150.42	= cube inches.
Cube feet	× .8036	= U. S. bushels.
Cube inches	× .000466	= U. S. bushels.
U. S. gallons	× .13367	= cube feet.
U. S. gallons	× 231.	= cube inches.
Cube feet	× 7.48	= U. S. gallons.
Cylindrical feet	× 5.874	= U. S. gallons.
Cube inches	× .004329	= U. S. gallons.
Cylindrical inches	× .0034	= U. S. gallons.
Lbs	× .009	= cwt.
Lbs	× .00045	= tons.
Cubic foot of water	× 62.5	=lbs. avoirdupois.
Cubic inch of water	× .03617	=lbs. avoirdupois.
Cylindrical foot of water	× 49.1	=lbs. avoirdupois.
Cylindrical inch of water	× .02842	=lbs. avoirdupois.
U. S. gallons of water	× 13.44	= 1 cwt.
U. S. gallons of water	× 268.8	= 1 ton.
Cubic feet of water	× 1.8	= 1 cwt.
Cubic feet of water	× 35.88	= 1 ton.
Cylindrical foot of water	× 6.	= U. S. gallons.
Column of water, 12 in. high, 1 in. diameter		= .341 lbs.
183,346 circular inches		= 1 square foot.
2,200 cylindrical inches		= 1 cubic foot.
French metres	× 3.281	= feet.
Kilogrammes	× 2.205	= avoirdupois lbs.
Grammes	× .002205	= avoirdupois lbs.

Tungsten, a metal used in the making of self-hardening steel, and which gives it that property, was discovered by the brothers D'Elhujar, eminent chemists, in the year 1783.

Square Roots and Cube Roots of Numbers from .1 to 20.

NO.	SQ.	CUBE.	SQ. RT.	C. RT.	NO.	SQ. RT.	C. RT.	NO.	SQ. RT.	C. RT.
.1	.01	.001	.316	.464	.4	2.098	1.639	.5	3.240	2.189
.15	.023	.003	.387	.531	.5	2.121	1.651	.6	3.256	2.197
.2	.04	.008	.447	.585	.6	2.145	1.663	.7	3.271	2.204
.25	.063	.016	.500	.630	.7	2.168	1.675	.8	3.286	2.211
.3	.09	.027	.548	.669	.8	2.191	1.687	.9	3.302	2.217
.35	.123	.043	.592	.705	.9	2.214	1.699	11.0	3.317	2.224
.4	.16	.064	.633	.737	5.0	2.236	1.710	.1	3.332	2.231
.45	.203	.091	.671	.766	.1	2.258	1.721	.2	3.347	2.237
.5	.25	.125	.707	.794	.2	2.280	1.733	.3	3.362	2.244
.55	.303	.166	.742	.819	.3	2.302	1.744	.4	3.376	2.251
.6	.36	.216	.775	.843	.4	2.324	1.754	.5	3.391	2.257
.65	.423	.275	.806	.866	.5	2.345	1.765	.6	3.406	2.264
.7	.49	.343	.837	.888	.6	2.366	1.776	.7	3.421	2.270
.75	.563	.422	.866	.909	.7	2.388	1.786	.8	3.435	2.277
.8	.64	.512	.894	.928	.8	2.408	1.797	.9	3.450	2.283
.85	.723	.614	.922	.947	.9	2.429	1.807	12.0	3.464	2.289
.9	.81	.729	.949	.965	6.0	2.450	1.817	.1	3.479	2.296
.95	.903	.857	.975	.983	.1	2.470	1.827	.2	3.493	2.302
1.	1.000	1.000	1.000	1.000	.2	2.490	1.837	.3	3.507	2.308
.05	1.103	1.158	1.025	1.016	.3	2.510	1.847	.4	3.521	2.315
1.1	1.210	1.331	1.049	1.032	.4	2.530	1.857	.5	3.536	2.321
.15	1.323	1.521	1.072	1.048	.5	2.550	1.866	.6	3.550	2.327
1.2	1.440	1.728	1.095	1.063	.6	2.569	1.876	.7	3.564	2.333
.25	1.563	1.953	1.118	1.077	.7	2.588	1.885	.8	3.578	2.339
1.3	1.690	2.197	1.140	1.091	.8	2.608	1.895	.9	3.592	2.345
.35	1.823	2.460	1.162	1.105	.9	2.627	1.904	13.0	3.606	2.351
1.4	1.960	2.744	1.183	1.119	7.0	2.646	1.913	.2	3.633	2.363
.45	2.103	3.049	1.204	1.132	.1	2.665	1.922	.4	3.661	2.375
1.5	2.250	3.375	1.225	1.145	.2	2.683	1.931	.6	3.688	2.387
.55	2.403	3.724	1.245	1.157	.3	2.702	1.940	.8	3.715	2.399
1.6	2.560	4.096	1.265	1.170	.4	2.720	1.949	14.0	3.742	2.410
.65	2.723	4.492	1.285	1.182	.5	2.739	1.957	.2	3.768	2.422
1.7	2.890	4.913	1.304	1.194	.6	2.757	1.966	.4	3.795	2.433
.75	3.063	5.359	1.323	1.205	.7	2.775	1.975	.6	3.821	2.444
1.8	3.240	5.832	1.342	1.216	.8	2.793	1.983	.8	3.847	2.455
.85	3.423	6.332	1.360	1.228	.9	2.811	1.992	15.0	3.873	2.466
1.9	3.610	6.859	1.378	1.239	8.0	2.828	2.000	.2	3.899	2.477
.95	3.803	7.415	1.396	1.249	.1	2.846	2.008	.4	3.924	2.488
2 0	4.000	8.000	1.414	1.260	.2	2.864	2.017	.6	3 950	2.499
.1	4.410	9.261	1.449	1.281	.3	2.881	2.025	.8	3.975	2.509
.2	4.840	10.65	1.483	1.301	.4	2.898	2.033	16.0	4.000	2.520
.3	5.290	12.17	1.517	1.320	.5	2.916	2.041	.2	4.025	2 530
.4	5.760	13.82	1.549	1.339	.6	2.933	2.049	.4	4.050	2.541
.5	6.250	15.63	1.581	1.357	.7	2.950	2.057	.6	4.074	2.551
.6	6.760	17.58	1.613	1.375	.8	2.967	2.065	.8	4.099	2.561
.7	7.290	19.68	1.643	1.393	.9	2.983	2.072	17.0	4.123	2.571
.8	7.840	21.95	1.673	1.409	9.0	3.000	2.080	.2	4.147	2.581
.9	8.410	24.39	1.703	1.426	.1	3.017	2.088	.4	4.171	2.591
3.0	9.00	27.00	1.732	1.442	.2	3.033	2.095	.6	4.195	2.601
.1	9.61	29.79	1.761	1.458	.3	3.050	2.103	.8	4.219	2.611
.2	10.24	32.77	1.789	1.474	.4	3.066	2.111	18.0	4.243	2.621
.3	10.89	35.94	1.817	1.489	.5	3.082	2.118	.2	4.266	2.630
.4	11.56	39 30	1.844	1.504	.6	3.098	2.125	.4	4.290	2.640
.5	12.25	42.88	1.871	1.518	.7	3.115	2.133	.6	4.313	2.650
.6	12.96	46.66	1.897	1.533	.8	3.131	2.140	.8	4.336	2.659
.7	13.69	50.65	1.924	1.547	.9	3.146	2.147	19.0	4.359	2.668
.8	14.44	54.87	1.949	1.561	10.0	3.162	2.154	.2	4.382	2.678
.9	15.21	59.32	1.975	1.574	.1	3.178	2.162	.4	4.405	2.687
4.0	16.00	64.00	2.000	1.587	.2	3.194	2.169	.6	4.427	2.696
.1	16.81	68.92	2.025	1.601	.3	3.209	2.177	.8	4.450	2.705
.2	17.64	74.09	2.049	1.613	.4	3.225	2.183	20.0	4.472	2.714
.3	18.49	79.51	2.074	1.626						

The Island of Banca produces the purest tin ore in the world. A recent analysis of Banca tin ore gave the following results: Tin, 99.961 per cent; iron, 00.019; lead, 00.014; copper, 00.006; total, 100. This metal was called by the ancients "Kassiteros," from the Greek.

Table of Squares, Cubes, Square Roots, and Cube Roots, of Numbers from 1 to 1000.

NO.	SQUARE.	CUBE.	SQ. RT.	C. RT.	NO.	SQUARE.	CUBE.	SQ. RT.	C. RT.
1	1	1	1.0000	1.0000	71	5041	357911	8.4261	4.1408
2	4	8	1.4142	1.2599	72	5184	373248	8.4853	4.1602
3	9	27	1.7321	1.4422	73	5329	389017	8.5440	4.1793
4	16	64	2.0000	1.5874	74	5476	405224	8.6023	4.1983
5	25	125	2.2361	1.7100	75	5625	421875	8.6603	4.2172
6	36	216	2.4495	1.8171	76	5766	438976	8.7178	4.2358
7	49	343	2.6458	1.9129	77	5929	456533	8.7750	4.2543
8	64	512	2.8284	2.0000	78	6084	474552	8.8318	4.2727
9	81	729	3.0000	2.0801	79	6241	493039	8.8882	4.2908
10	100	1000	3.1623	2.1544	80	6400	512000	8.9443	4.3089
11	121	1331	3.3166	2.2240	81	6561	531441	9.0000	4.3267
12	144	1728	3.4641	2.2894	82	6724	551368	9.0554	4.3445
13	169	2197	3.6056	2.3513	83	6889	571787	9.1104	4 3621
14	196	2744	3.7417	2.4101	84	7056	592704	9.1652	4.3795
15	225	3375	3.8730	2.4662	85	7225	614125	9.2195	4.3968
16	256	4096	4.0000	2.5198	86	7396	636056	9.2736	4.4140
17	289	4913	4.1231	2.5713	87	7569	658503	9.3274	4.4310
18	324	5832	4.2426	2.6207	88	7744	681472	9.3808	4.4480
19	361	6859	4.3589	2.6684	89	7921	704969	9.4340	4.4647
20	400	8000	4.4721	2.7144	90	8100	729000	9.4868	4.4814
21	441	9261	4.5826	2.7589	91	8281	753571	9.5394	4.4979
22	484	10648	4.6904	2.8020	92	8464	778688	9.5917	4.5144
23	529	12167	4.7958	2.8429	93	8649	804357	9.6437	4.5307
24	576	13824	4.8990	2.8845	94	8836	830584	9.6954	4.5468
25	625	15625	5.0000	2.9240	95	9025	857375	9.7468	4.5629
26	676	17576	5.0990	2.9625	96	9216	884736	9.7980	4.5789
27	729	19683	5.1962	3.0000	97	9409	912673	9.8489	4.5947
28	784	21952	5.2915	3.0366	98	9604	941192	9.8995	4.6104
29	841	24389	5.3852	3.0723	99	9801	970299	9.9499	4.6261
30	900	27000	5.4772	3.1072	100	10000	1000000	10.0000	4.6416
31	961	29791	5.5678	3.1414	101	10201	1030301	10.0499	4.6570
32	1024	32768	5.6569	3.1748	102	10404	1061208	10.0995	4.6723
33	1089	35937	5.7446	3.2075	103	10609	1092727	10.1489	4.6875
34	1156	39304	5.8310	3.2396	104	10816	1124864	10.1980	4.7027
35	1225	42875	5.9161	3.2711	105	11025	1157625	10.2470	4.7177
36	1296	46656	6.0000	3.3019	106	11236	1191016	10.2957	4.7326
37	1369	50653	6.0828	3.3322	107	11449	1225043	10.3441	4.7475
38	1444	54872	6.1644	3.3620	108	11664	1259712	10.3923	4 7622
39	1521	59319	6.2450	3.3912	109	11881	1295029	10.4403	4.7769
40	1600	64000	6.3246	3.4200	110	12100	1331000	10.4881	4.7914
41	1681	68921	6.4031	3.4482	111	12321	1367631	10.5357	4 8059
42	1764	74088	6.4807	3.4760	112	12544	1404928	10.5830	4.8203
43	1849	79507	6.5574	3 5034	113	12769	1442897	10.6301	4.8346
44	1936	85184	6.6332	3.5303	114	12996	1481544	10.6771	4.8488
45	2025	91125	6.7082	3 5569	115	13225	1520875	10.7238	4.8629
46	2116	97336	6.7823	3.5830	116	13456	1560896	10.7703	4.8770
47	2209	103823	6.8557	3.6088	117	13689	1601613	10.8167	4.8910
48	2304	110592	6.9282	3.6342	118	13924	1643032	10.8628	4.9049
49	2401	117649	7.0000	3.6563	119	14161	1685159	10.9087	4.9187
50	2500	125000	7.0711	3.6840	120	14400	1728000	10.9545	4.9324
51	2601	132651	7.1414	3.7084	121	14641	1771561	11.0000	4.9461
52	2704	140608	7.2111	3.7325	122	14884	1815848	11.0454	4 9597
53	2809	148877	7.2801	3.7563	123	15129	1860867	11.0905	4.9732
54	2916	157464	7.3485	3.7798	124	15376	1906624	11.1355	4.9866
55	3025	166375	7.4162	3.8030	125	15625	1953125	11.1803	5.0000
56	3136	175616	7.4833	3.8259	126	15876	2000376	11.2250	5.0133
57	3249	185193	7.5498	3.8485	127	16129	2048383	11.2694	5.0265
58	3364	195112	7.6158	3.8709	128	16384	2097152	11.3137	5.0397
59	3481	205379	7.6811	3.8930	129	16641	2146689	11.3578	5.0528
60	3600	216000	7.7460	3 9149	130	16900	2197000	11.4018	5.0658
61	3721	226981	7.8102	3.9365	131	17161	2248091	11.4455	5.0788
62	3844	238328	7.8740	3.9579	132	17424	2299968	11.4891	5.0916
93	3969	250047	7.9373	3.9791	133	17689	2352637	11.5326	5.1045
64	4096	262144	8.0000	4.0000	134	17956	2406104	11.5758	5.1172
65	4225	274625	8.0623	4.0207	135	18225	2460375	11.6190	5.1299
66	4356	287496	8.1240	4.0412	136	18496	2515456	11.6619	5.1426
67	4489	300764	8.1854	4.0615	137	18769	2571353	11.7047	5.1551
68	4624	314432	8.2462	4.0817	138	19044	2628072	11.7473	5.1676
69	4761	328509	8.3066	4.1016	139	19321	2685619	11.7898	5.1801
70	4900	343000	8.3666	4.1213	140	19600	2744000	11.8322	5.1995

Table of Squares, Cubes, Square Roots and Cube Roots of Numbers from 1 to 1000—*Continued.*

NO.	SQUARE.	CUBE.	SQ. RT.	C. RT.	NO.	SQUARE.	CUBE.	SQ. RT.	C. RT.
141	19881	2803221	11.8743	5.2048	211	44521	9393931	14.5258	5.9533
142	20164	2863288	11.9164	5.2171	212	44944	9528128	14.5602	5.9627
143	20449	2924207	11.9583	5.2293	213	45369	9663597	14.5945	5.9721
144	20736	2985984	12.0000	5.2415	214	45796	9800344	14.6287	5.9814
145	21025	3048625	12.0416	5.2536	215	46225	9938375	14.6629	5.9907
146	21316	3112136	12.0830	5.2656	216	46656	10077696	14.6969	6.0000
147	21609	3176523	12.1244	5.2776	217	47089	10218313	14.7309	6.0092
148	21904	3241792	12.1655	5.2896	218	47524	10360232	14.7648	6.0185
149	22201	3307949	12.2066	5.3015	219	47961	10503459	14.7986	6.0277
150	22500	3375000	12.2474	5.3133	220	48400	10648000	14.8324	6 0368
151	22801	3442951	12.2882	5.3251	221	48841	10793861	14.8661	6.0459
152	23104	3511808	12.3288	5.3368	222	49284	10941048	14.8997	6.0550
153	23409	3581577	12.3693	5.3485	223	49729	11089567	14.9332	6.0641
154	23716	3652264	12.4097	5.3601	224	50176	11239424	14.9666	6.0732
155	24025	3723875	12.4499	5.3717	225	50625	11390625	15.0000	6.0822
156	24336	3796416	12.4900	5.3832	226	51076	11543176	15.0333	6.0912
157	24649	3869893	12.5300	5.3947	227	51529	11697083	15.0665	6.1002
158	24964	3944312	12.5698	5.4061	228	51984	11852352	15.0997	6.1091
159	25281	4019679	12.6095	5.4175	229	52441	12008989	15.1327	6.1180
160	25600	4096000	12.6491	5.4288	230	52900	12167000	15.1658	6.1269
161	25921	4173281	12.6886	5.4401	231	53361	12326391	15.1987	6.1358
162	26244	4251528	12.7279	5.4514	232	53824	12487168	15.2312	6.1446
163	26569	4330747	12.7671	5.4626	233	54289	12649337	15.2643	6.1534
164	26896	4410944	12.8062	5.4737	234	54756	12812904	15.2971	6.1622
165	27225	4492125	12.8452	5.4848	235	55225	12977875	15.3297	6.1710
166	27556	4574296	12.8841	5.4959	236	55696	13144256	15.3623	6.1797
167	27889	4657463	12.9228	5.5069	237	56169	13312053	15.3948	6.1885
168	28224	4741632	12.9615	5.5178	238	56644	13481272	15.4272	6.1972
169	28561	4826809	13.0000	5.5288	239	57121	13651919	15.4596	6.2058
170	28900	4913000	13.0384	5.5397	240	57600	13824000	15.4919	6.2145
171	29241	5000211	13.0767	5.5505	241	58081	13997521	15.5242	6.2231
172	29584	5088448	13.1149	5.5613	242	58564	14172488	15.5563	6.2317
173	29929	5177717	13.1529	5.5721	243	59049	14348907	15.5885	6.2403
174	30276	5268024	13.1909	5.5828	244	59536	14526784	15.6205	6.2488
175	30625	5359375	13.2288	5.5934	245	60025	14706125	15.6525	6.2573
176	30976	5451776	13.2665	5.6041	246	60516	14886936	15.6844	6.2658
177	31329	5545233	13.3041	5.6147	247	61009	15069223	15.7162	6.2743
178	31684	5639752	13.3417	5.6252	248	61504	15252992	15.7480	6.2828
179	32041	5735339	13.3791	5.6357	249	62001	15438249	15.7797	6.2912
180	32400	5832000	13.4164	5.6462	250	62500	15625000	15.8114	6.2969
181	32761	5929741	13.4536	5.6567	251	63001	15813251	15.8430	6 3080
182	33124	6028568	13.4907	5.6671	252	63504	16003008	15.8745	6.3164
183	33489	6128487	13.5277	5.6774	253	64009	16194277	15.9060	6.3247
184	33856	6229504	13.5647	5.6877	254	64516	16387064	15.9374	6.3330
185	34225	6331625	13.6015	5.6980	255	65025	16581375	16.9687	6.3413
186	34596	6434856	13.6382	5.7083	256	65536	16777216	16.0000	6.3496
187	34969	6539203	13.6748	5.7185	257	66049	16974593	16.0312	6.3579
188	35344	6644672	13.7113	5.7287	258	66564	17173512	16.0624	6.3661
189	35721	6751269	13.7477	5.7388	259	67081	17373979	16.0935	6 3743
190	36100	6859000	13.7840	5.7489	260	67600	17576000	16.1245	6.3825
191	36481	6967871	13.8203	5.7590	261	68121	17779581	16.1555	6.3907
192	36864	7077888	13.8564	5 7690	262	68644	17984728	16.1864	6.3988
193	37249	7189057	13.8924	5.7790	263	69169	18191447	16.2173	6.4070
194	37636	7301384	13.9284	5.7890	264	69696	18399744	16.2481	6.4151
195	38025	7414875	13.9642	5.7989	265	70225	18609625	16.2788	6.4232
196	38416	7529536	14.0000	5.8088	266	70756	18821096	16.3095	6.4312
197	38809	7645373	14.0357	5.8186	267	71289	19034163	16 3401	6.4393
198	39204	7762392	14.0712	5.8285	268	71824	19248832	16.3707	6.4473
199	39601	7880599	14.1067	5.8383	269	72361	19465109	16.4012	6.4553
200	40000	8000000	14.1421	5.8480	270	72900	19683000	16.4317	6.4633
201	40401	8120601	14.1774	5.8578	271	73441	19902511	16.4621	6.4713
202	40804	8242408	14.2127	5.8675	272	73984	20123648	16.4924	6.4792
203	41209	8365427	14.2478	5.8771	273	74529	20346417	16.5227	6.4872
204	41616	8489664	14.2829	5.8868	274	75076	20570824	16.5529	6.4951
205	42025	8615125	14.3178	5.8964	275	75625	20796875	16.5831	6.5030
206	42436	8741816	14.3527	5.9059	276	76176	21024576	16.6132	6.5108
207	42849	8869743	14.3875	5.9155	277	76729	21253933	16.6433	6.5187
208	43264	8998912	14.4222	5.9250	278	77284	21484952	16.6733	6.5265
209	43681	9129329	14.4568	5.9345	279	77841	21717639	16.7033	6.5343
210	44100	9261000	14.4914	5.9439	280	78400	21952000	16.7332	6.5421

Table of Squares, Cubes, Square Roots and Cube Roots of Numbers from 1 to 1000—*Continued.*

NO.	SQUARE.	CUBE.	SQ. RT.	C. RT.	NO.	SQUARE.	CUBE.	SQ. RT.	C. RT.
281	78961	22188041	16.7631	6.5499	351	123201	43243551	18.7350	7.0540
282	79524	22425768	16.7929	6.5577	352	123904	43614208	18.7617	7.0607
283	80089	22665187	16.8226	6.5654	353	124609	43986977	18.7883	7.0674
284	80656	22906304	16.8523	6.5731	354	125316	44361864	18.8149	7.0740
285	81225	23149125	16.8819	6.5808	355	126025	44738875	18.8414	7.0807
286	81796	23393656	16.9115	6.5885	356	126736	45118016	18.8680	7.0873
287	82369	23639903	16.9411	6.5962	357	127449	45499293	18.8944	7.0940
288	82944	23887872	16.9706	6.6039	358	128164	45882712	18.9209	7.1006
289	83521	24137569	17.0000	6.6115	359	128881	46268279	18.9473	7.1072
290	84100	24389000	17.0294	6.6191	360	129600	46656000	18.9737	7.1138
291	84681	24642171	17.0587	6.6267	361	130321	47045881	19.0000	7.1204
292	85264	24897088	17.0880	6.6343	362	131044	47437928	19.0263	7.1269
293	85849	25153757	17.1172	6.6419	363	131769	47832147	19.0526	7.1335
294	86436	25412184	17.1464	6.6494	364	132496	48228544	19.0788	7.1400
295	87025	25672375	17.1756	6.6569	365	133225	48627125	19.1050	7.1466
296	87616	25934336	17.2047	6.6644	366	133956	49027896	19.1311	7.1531
297	88209	26198073	17.2337	6.6719	367	134689	49430863	19.1572	7.1596
298	88804	26463592	17.2627	6.6794	368	135424	49836032	19.1833	7.1661
299	89401	26730899	17.2916	6.6869	369	136161	50243409	19.2094	7.1726
300	90000	27000000	17 3205	6.6943	370	136900	50653000	19.2354	7.1791
301	90601	27270901	17.3494	6.7018	371	137641	51064811	19.2614	7.1855
302	91204	27543608	17.3781	6.7092	372	138384	51478848	19.2873	7.1920
303	91809	27818127	17.4069	6.7166	373	139129	51895117	19.3132	7.1984
304	92416	28094464	17.4356	6.7240	374	139876	52313624	19.3391	7.2048
305	93025	28372625	17.4642	6.7313	375	140625	52734375	19.3649	7.2112
306	93636	28652616	17.4929	6.7387	376	141376	53157376	19.3907	7.2177
307	94249	28934443	17.5214	6.7460	377	142129	53582633	19.4165	7.2240
308	94864	29218112	17.5499	6.7533	378	142884	54010152	19.4422	7.2304
309	95481	29503629	17.5784	6.7606	379	143641	54439939	19.4679	7.2368
310	96100	29791000	17.6068	6.7679	380	144400	54872000	19.4936	7.2432
311	96721	30080231	17.6352	6.7752	381	145161	55306341	19.5192	7 2495
312	97344	30371328	17.6635	6.7824	382	145924	55742968	19.5448	7.2558
313	97969	30664297	17.6918	6.7897	383	146689	56181887	19.5704	7.2622
314	98596	30959144	17.7200	6.7969	384	147456	56623104	19 5959	7.2685
315	99225	31255875	17.7482	6.8041	385	148225	57066625	19.6214	7.2748
316	99856	31554496	17 7764	6.8113	386	148996	57512456	19.6469	7.2811
317	100489	31855013	17.8045	6.8185	387	149769	57960603	19.6723	7.2874
318	101124	32157432	17.8326	6.8256	388	150544	58411072	19.6977	7.2936
319	101761	32461759	17.8606	6.8328	389	151321	58863869	19.7231	7.2999
320	102400	32768000	17.8885	6.8399	390	152100	59319000	19.7484	7.3061
321	103041	33076161	17.9165	6.8470	391	152881	59776471	19.7737	7.3124
322	103684	33386248	17.9444	6.8541	392	153664	60236288	19.7990	7.3186
323	104329	33698267	17.9722	6.8612	393	154449	60698457	19.8242	7.3248
324	104976	34012224	18.0000	6.8683	394	155236	61162984	19.8494	7.3310
325	105625	34328125	18.0278	6.8753	395	156025	61629875	19.8746	7.3372
326	106276	34645976	18.0555	6.8824	396	156816	62099136	19.8997	7.3434
327	106929	34965783	18.0831	6.8894	397	157609	62570773	19.9249	7.3496
328	107584	35287552	18.1108	6.8964	398	158404	63044792	19.9499	7.3558
329	108241	35611289	18.1384	6.9034	399	159201	63521199	19.9750	7.3619
330	108900	35937000	18.1659	6.9104	400	160000	64000000	20.0000	7 3681
331	109561	36264691	18.1934	6.9174	401	160801	64481201	20.0250	7.3742
332	110224	36594368	18.2209	6.9244	402	161604	64964808	20.0499	7.3803
333	110889	36926037	18.2483	6.9313	403	162409	65450827	20.0749	7.3864
334	111556	37259704	18.2757	9.9382	404	163216	65939264	20.0998	7.3925
335	112225	37595375	18.3030	6.9451	405	164025	66430125	20.1246	7.3986
336	112896	37933056	18.3303	6.9521	406	164836	66923416	20.1494	7.4047
337	113569	38272753	18.3576	6.9589	407	165649	67419143	20.1742	7.4108
338	114244	38614472	18.3848	6.9658	408	166464	67917312	20.1990	7.4169
339	114921	38958219	18.4120	6.9727	409	167281	68417929	20.2237	7.4229
340	115600	39304000	18.4391	6.9795	410	168100	68921000	20 2485	7.4290
341	116281	39651821	18.4662	6.9864	411	168921	69426531	20.2731	7.4350
342	116964	40001688	18.4932	6.9932	412	169744	69934528	20.2978	7.4410
343	117649	40353607	18.5203	7.0000	413	170569	70444997	20.3224	7.4470
344	118336	40707584	18.5472	7.0068	414	171396	70957944	20.3470	7.4530
345	119025	41063625	18.5742	7.0136	415	172225	71473375	20.3715	7.4590
346	119716	41421736	18.6011	7.0203	416	173056	71991296	20.3961	7.4650
347	120409	41781923	18.6279	7.0271	417	173889	72511713	20.4206	7.4710
348	121104	42144192	18.6548	7.0338	418	174724	73034632	20.4450	7.4770
349	121801	42508549	18.6815	7.0406	419	175561	73560059	20.4695	7.4829
350	122500	42875000	18.7083	7.0473	420	176400	74088000	20.4939	7.4889

Table of Squares, Cubes, Square Roots, and Cube Roots of Numbers from 1 to 1000.—*Continued.*

No.	SQUARE.	CUBE.	SQ. RT.	C. RT.	No.	SQUARE.	CUBE.	SQ. RT.	C. RT.
421	177241	74618461	20.5183	7.4948	491	214081	118370771	22.1585	7.8891
422	178084	75151448	20.5426	7.5007	492	242064	119095488	22.1811	7.8944
423	178929	75686967	20.5670	7.5067	493	243049	119823157	22.2036	7.8998
424	179776	76225024	20.5913	7.5126	494	244036	120553784	22.2261	7.9051
425	180625	76765625	20.6155	7.5185	495	245025	121287375	22.2486	7.9105
426	181476	77308776	20.6398	7.5244	496	246016	122023926	22.2711	7.9158
427	182329	77854483	20.6640	7.5302	497	247009	122763473	22.2935	7.9211
428	183184	78402752	20.6882	7.5361	498	248004	123505992	22.3159	7.9264
429	184041	78953589	20.7123	7.5420	499	249001	124251499	22.3383	7.9317
430	184900	79507000	20.7364	7.5478	500	250000	125000000	22.3607	7.9370
431	185761	80062991	20.7605	7.5537	501	251001	125751501	22.3830	7.9423
432	186624	80621568	20.7846	7.5595	502	252004	126506008	22.4054	7.9476
433	187489	81182737	20.8087	7.5654	503	253009	127263527	22.4277	7.9528
434	188356	81746504	20.8327	7.5712	504	254016	128024064	22.4499	7.9581
435	189225	82312875	20.8567	7.5770	505	255025	128787625	22.4722	7.9634
436	190096	82881856	20.8806	7.5828	506	256036	129554216	22 4944	7.9686
437	190969	83453453	20.9045	7.5886	507	257049	130323843	22.5117	7.9739
438	191844	84027672	20.9284	7.5944	508	258064	131096512	22.5389	7.9791
439	192721	84604519	20.9523	7.6001	509	259081	131872229	22.5610	7.9843
440	193600	85184000	20.9762	7.6059	510	260100	132651000	22.5832	7.6896
441	194481	85766121	21.0000	7.6117	511	261121	133432831	22.6053	7.9948
442	195364	86350888	21.0238	7.6134	512	262144	134217728	22.6274	8.0000
443	196249	86938307	21.0476	7.6232	513	263169	135005697	22.6495	8.0052
444	197136	87528384	21.0713	7.6289	514	264196	135796744	22.6716	8.0104
445	198025	88121125	21.0950	7.6356	515	265225	136590875	22.6936	8.0156
446	198916	88716536	21.1187	7.6403	516	266256	137388096	22.7156	8.0208
447	199809	89314623	21.1424	7.6460	517	267289	138188413	22.7376	8.0260
448	200704	89915392	21.1660	7.6517	518	268324	138991832	22.7596	8.0311
449	201601	90518849	21.1896	7.6574	519	269361	139798359	22.7816	8.0363
450	202500	91125000	21.2132	7.6631	520	270400	140608000	22.8035	8.0415
451	203401	91733851	21.2368	7.6688	521	271441	141420761	22.8254	8.0466
452	204304	92345408	21.2603	7.6744	522	272484	142236648	22.8473	8.0517
453	205209	92959677	21.2838	7.6801	523	273529	143055667	22 8692	8.0569
454	206116	93576664	21.3073	7.6857	524	274576	143877824	22.8910	8.0620
455	207025	94196375	21.3307	7.6914	525	275625	144703125	22.9129	8.0671
456	207936	94818816	21.3542	7.6970	526	276676	145531576	22.9347	8.0723
457	208849	95443993	21.3776	7.7026	527	277729	146363183	22.9565	8.0784
458	209764	96071912	21.4009	7.7082	528	278784	147197952	22.9783	8.0825
459	210681	96702579	21.4243	7.7138	529	279841	148035889	23.0 00	8.0876
460	211600	97336000	21.4476	7.7194	530	280900	148877000	23.0217	8.0927
461	212521	97972181	21.4709	7.7250	531	281961	149721291	23.0434	8.0978
462	213444	98611128	21.4942	7.7306	532	283024	150568768	23.0651	8.1028
463	214369	99252847	21.5174	7.7362	533	284089	151419436	23.0868	8.1079
464	215296	99897344	21.5407	7.7418	534	285156	152273304	23.1084	8.1130
465	216225	100544625	21.5639	7.7473	535	286225	153130375	23.1301	8.1180
466	217156	101194696	21.5870	7.7529	536	287296	153990656	23.1517	8.1231
467	218089	101847563	21.6102	7.7584	537	288369	154854153	23.1733	8.1281
468	219024	102503232	21.6333	7.7639	538	289444	155720872	23.1948	8.1332
469	219961	103161709	21.6564	7.7695	539	290521	156690819	23.2164	8.1382
470	220900	103823000	21.6795	7.7750	540	291600	157464000	23.2379	8.1433
471	221841	104487111	21.7025	7.7805	541	292681	158340421	23.2594	8.1483
472	222784	105154048	21.7256	7.7860	542	293764	159220088	23.2809	8.1583
473	223729	105823817	21.7486	7.7915	543	294849	160103007	23.3024	8.1583
474	224676	106496424	21.7715	7.7970	544	295936	160989184	23.3238	8.1633
475	225625	107171875	21.7945	7.8025	545	297025	161878625	23.3452	8.1683
476	226576	107850176	21.8174	7.8079	546	298116	162771336	23.3666	8.1733
477	227529	108531333	21.8403	7.8134	547	299209	163667323	23.3880	8.1783
478	228484	109215352	21.8632	7.8188	548	300304	164566592	23.4094	8.1833
479	229441	109902239	21.8861	7.8243	549	301401	165469149	23.4307	8.1882
480	230400	110592000	21.9089	7.8297	550	302500	166375000	23.4521	8.1932
481	231361	111284641	21.9317	7.8352	551	303601	167284151	23 4731	8.1982
482	232324	111980168	21.9545	7.8406	552	304704	168196608	23.4947	8.2031
483	233289	112678587	21.9773	7.9460	553	305809	169112377	23.5160	8.2081
484	234256	113379904	22.0000	7.8514	554	306916	170031464	23.5372	8.2130
485	235225	114084125	22.0127	7.8568	555	308025	170953875	23.5584	8.2180
486	236196	114791256	22.0454	7.8622	556	309136	171879616	23.5797	8.2229
487	237169	115501303	22.0681	7.8676	557	310249	172808693	23.6008	8.2278
488	238144	116214272	22.0907	7.8730	558	311364	173741112	23.6220	8.2327
489	239121	116930169	22.1133	7.8784	559	312481	174676879	23.6432	8.2377
490	240100	117649000	22.1359	7.8837	560	313600	175616000	23.6643	8.2426

Table of Squares, Cubes, Square Roots and Cube Roots of Numbers from 1 to 1,000—(*Continued.*)

NO.	SQUARE.	CUBE.	SQ. RT.	C. RT.	NO.	SQUARE.	CUBE.	SQ. RT.	C. RT.
561	314721	176558481	23.6854	8.2475	631	398161	251239591	25.1197	8.5772
562	315844	177504328	23.6065	8.2524	632	399424	252435968	25.1396	8.5817
563	316969	178453547	23.7276	8.2573	633	400689	253636137	25.1595	8.5862
564	318096	179406144	23.7487	8.2621	634	401956	254840104	25.1794	8.5907
565	319225	180362125	23.6697	8.2670	635	403225	256047875	25.1992	8.5952
566	320356	181321496	23.7908	8.2719	636	404496	257259456	25.2190	8.5997
567	321489	182284263	23.8118	8.2768	637	405769	258474853	25.2389	8.6043
568	322624	183250432	23.8328	8.2816	638	407044	259694072	25.2587	8.6088
569	323761	184220009	23.8527	8.2865	639	408321	260917119	25.2784	8.6132
570	324900	185193000	23.8747	8.2913	640	409600	262144000	25.2982	8.6177
571	326041	186169411	33.8956	8.2962	641	410881	263374721	25.3180	8.6222
572	327184	187149248	23.9165	8.3010	642	412164	264609288	25.3377	8.6267
573	328329	188132517	23.9374	8.3059	643	413449	265847707	25.3574	8.6312
574	329466	189119224	23.9583	8.3107	644	414736	267089984	25.3772	8.6357
575	330625	190109375	23.9792	8.3155	645	416025	268336125	25.3969	8.6401
576	331776	191102976	24.0000	8.3203	646	417316	269586136	25.4165	8.6446
577	332929	192100033	24.0208	8.3251	647	418609	270840023	25.4362	8.6490
578	334084	193100552	24.0416	8.3300	648	419904	272097792	25.4558	8.6535
579	335241	194104539	24.0624	8.3348	649	421201	273359449	25.4755	8.6579
580	336400	195112000	24.0832	8.3396	650	422500	274625000	25.4951	8.6624
581	337561	196122941	24.1039	8.3443	651	423801	275894451	25.5147	8.6668
582	338724	197137368	24.1247	8.3491	652	425104	277167808	25.5343	8.6713
583	339889	198155287	24.1454	8.3539	653	426409	278445077	25.5539	8.6757
584	341056	199176704	24.1661	8.3587	654	427716	279726264	25.5734	8.6801
585	342225	200201625	24.1868	8.3634	655	429025	281011375	25.5930	8.6845
586	343396	201230056	24.2074	8.3682	656	430336	282300416	25.6125	8.6890
587	344569	202262003	24.2281	8.3730	657	431649	283593393	25.6320	8.6934
588	345744	203297472	24.2487	8.3777	658	432964	284890312	25.5515	8.6978
589	346921	204336469	24.2693	8.2825	659	434281	286191179	25.6710	8.7022
590	348100	205379000	24.2899	8.3872	660	435600	287496000	25.6905	8.7066
591	349281	206426071	24.3105	8.3919	661	436921	288804781	25.7099	8.7110
592	350464	207474688	24.3311	8.3967	662	438244	290117528	25.7294	8.7154
593	351649	208527857	24.3516	8.4014	663	439569	291434247	25.7488	8.7198
594	352836	209584584	24 3721	8.4061	664	440896	292754944	25.7682	8.7241
595	354025	210644875	24.3926	8.4108	665	442225	294079625	25.7876	8.7285
596	355216	211708736	24.4131	8.4155	666	443556	295408296	25.8070	8.7329
597	356409	212776173	23.4336	8.4202	667	444889	296740963	25.8263	8.7373
598	357604	213847192	24.4550	8.4249	668	446224	298077632	25.8457	8.7416
599	358801	214921799	24.4745	8.4296	669	447561	299418309	25.8650	8.7460
600	360000	216000000	24.4949	8.4343	670	448900	300763000	25.8844	8.7503
601	361201	217081801	24.5153	8.4390	671	450241	302111711	25.9037	8.7547
602	362404	218167208	24.5357	8.4437	672	451584	353464448	25.9230	8 7590
603	363609	219246227	24.5561	8.4484	673	452929	304821217	25.9422	8.7634
604	364816	220348864	24.6764	8.4530	674	454276	306182024	25.9615	8.7677
605	366025	221445125	24.5967	8.4577	675	456625	307546875	25.9808	8.7721
606	367236	222645016	24.6171	8.4623	676	456976	308915776	26.0000	8.7764
607	368449	223648543	24.6372	8.4670	677	458329	310288733	26.0192	8.7807
608	369664	224775712	24.6577	8.4716	678	459684	311665752	26.0384	8.7850
609	370881	225866529	24 6779	8.4763	679	461041	313046839	26.0576	8.7893
610	372100	226981000	24.6982	8.4809	680	462400	314432000	26.0768	8.7937
611	373321	228099131	24.7184	8.4856	681	463761	315821241	26.0960	8.7980
612	374544	229220928	24.7386	8.4902	982	465124	317214568	26.1151	8.8023
613	375769	230346397	24.7588	8.4948	683	466489	318611987	26.1343	8.8066
614	376996	231475544	24.7790	8.4994	684	467856	320013504	26.1534	8.8109
615	378225	232608375	24.7992	8.5040	685	469225	321419125	26.1725	8.8152
616	379456	233744896	24.8193	8.5086	686	470596	322828856	26.1916	8.8194
617	380689	234885113	24.8295	8.5132	687	471969	324242703	26.2107	8.8237
618	381924	236029032	24.8596	8.5178	688	473344	325660672	26.2298	8.8280
619	383161	237176659	24.8797	8.5224	689	474721	327082769	26.2488	8.8323
620	384400	238328000	24.8998	8.5270	690	476100	328509000	26.2679	8.8366
621	385941	239483061	24.9199	8.5316	691	477481	329939371	26.2869	8.8408
622	386884	240641848	24.9399	8.5362	692	478864	331373888	26.3059	8.8451
623	388129	242804367	24.9600	8.5408	693	480249	332812557	26.3249	8.8493
624	389376	242970624	24.9800	8.5453	694	481636	334255384	26.3439	8.8536
625	390625	244140625	25.0000	8.5499	695	483025	335702375	26.3629	8.8578
626	391876	245314376	25.0200	8.5544	696	484416	337153536	26.3818	8.8621
627	393129	246491883	25.0409	8.5590	697	485809	338608873	26.4008	8.8663
628	394384	247673152	25.0599	8 5635	698	487204	340068392	26.4197	8.8706
629	395641	248858189	25.0799	8.5681	699	488601	341532099	26.4386	8 8748
630	396900	250047000	25.0998	8.5726	700	490000	343000000	26.4575	8.8790

Table of Squares, Cubes, Square Roots, and Cube Roots, of Numbers from 1 to 1000.—*Continued.*

NO.	SQUARE.	CUBE.	SQ. RT.	C. RT.	NO.	SQUARE.	CUBE.	SQ. RT.	C. RT.
701	491401	344472101	26.4764	8.8833	771	594441	458314011	27.7669	9.1696
702	492804	345948408	26.4953	8.8875	772	595984	460099648	27.7849	9.1736
703	494209	347428927	26.5141	8.8917	773	597529	461889917	27.8029	9.1775
704	495616	348913664	26.5330	8.8959	774	599076	463684824	27.8209	9.1815
705	497025	350402625	26.5518	8.9001	775	600625	465484375	27.8388	9.1855
706	498436	351895816	26.5707	8.9043	776	602176	467288576	27.8568	9.1894
707	499849	353393243	26.5895	8.9085	777	603729	469097433	27.8747	9.1933
708	501264	354894912	26.6083	8.9127	778	605284	470910952	27.8927	9.1973
709	502681	356400829	26.6271	8.9169	779	606841	472729139	27.9106	9.2012
710	504100	357911000	26.6458	8.9211	780	608400	474552000	27.9285	9.2052
711	505521	359425431	26.6646	8.9253	781	609961	476379541	27.9464	9.2091
712	506944	360944128	26.6833	8.9295	782	611524	478211768	27.9643	9.2130
713	508369	362467097	26.7021	8.9337	783	613089	480048687	27.9821	9.2170
714	509796	363994344	26.7208	8.9378	784	614656	481890304	28.0000	9.2209
715	511225	365525875	26.7395	8.9420	785	616225	483736625	28.0179	9.2248
716	512656	367061696	26.7582	8.9462	786	617796	485587656	28.0357	9.2287
717	514089	368601813	26.7769	8.9503	787	619369	487443403	28.0535	9.2326
718	515524	370146232	26.7955	8.9545	788	620944	489303872	28.0713	9 2365
719	516961	371694959	26.8142	8.9587	789	622521	491169069	28.0891	9.2404
720	518400	373248000	26.8328	8.9628	790	624100	493039000	28.1069	9.2443
721	519841	374805361	26.8514	8.9670	791	625681	494913671	28.1247	9.2482
722	521284	376367048	26.8701	8.9711	792	627264	496793088	28.1425	9.2521
723	522729	377933067	26.8887	8.9752	793	628849	498677257	28.1603	9.2560
724	524176	379503424	26.9072	8.9794	794	630436	500566184	28.1780	9.2599
725	525625	381078125	26.9258	8.9835	795	632025	502459875	28.1957	9.2638
726	527076	382657176	26.9444	8.9876	796	633616	504358336	28.2135	9.2677
727	528529	384240583	26.9629	8.9918	797	635209	506261573	28.2312	9.2716
728	529984	385828352	26.9815	8.9959	798	636804	508169592	28.2489	9.2754
729	531441	387420489	27.0000	9.0000	799	638401	510082399	28.2666	9.2793
730	532900	389017000	27.0185	9.0041	800	640000	510000000	28.2843	9.2832
731	534361	390617891	27.0370	9.0082	801	641601	513922401	28.3019	9.2870
732	535824	392223168	27.0555	9.0123	802	643204	515849608	28.3196	9.2909
733	537289	393832837	27.0740	9.0164	803	644809	517781627	28.3373	9.2948
734	538756	395446904	27.0924	9.0205	804	646416	519718464	28.3549	9.2986
735	540225	397065375	27.1109	9.0246	805	648025	521660125	28.3725	9.3025
736	541696	398688256	27.1293	9.0287	806	649636	523606616	28.3901	9.3063
737	543169	400315553	27.1477	9.0328	807	651249	525557943	28.4077	9.3102
738	544644	401947272	27.1662	9.0369	808	652864	527514112	28.4253	9.3140
739	546121	403583419	27.1846	9.0410	809	654481	529475129	28.4429	9.3179
740	547600	405224000	27.2029	9.0450	810	656100	531441000	28.4605	9.3217
741	549081	406869021	27.2213	9.0491	811	657721	533411731	28.4781	9.3255
742	550564	408518488	27.2397	9.0532	812	659344	535387328	28.4956	9.3294
743	552049	410172407	27.2580	9.0572	813	660969	537367797	28.5132	9.3332
744	553536	411830784	27.2764	9.0613	814	662596	539353144	28.5307	9.3370
745	555025	413493625	27.2947	9.0654	815	664225	541343375	28.5482	9.3408
746	556516	415160936	27.3130	9.0694	816	665856	543338496	28.5657	9.3447
747	558009	416832723	27.3313	9.0735	817	667489	545338513	28.5832	9.3485
748	559504	418508992	27.3496	9.0775	818	669124	547343432	28.6007	9.3523
749	561001	420189749	27.3679	9.0816	819	670761	549353259	28.6182	9.3561
750	562500	421875000	27.3861	9.0856	820	672400	551368000	28.6356	9.3599
751	564001	423564751	27.4044	9.0896	821	674041	553387661	28.6531	9.3637
752	565504	425259008	27.4226	9.0937	822	675684	555412248	28.6705	9.3675
753	567009	426957777	27.4408	9.0977	823	677329	557441767	28.6880	9.3713
754	568516	428661064	27.4591	9.1017	824	678976	559476224	28.7054	9.3751
755	570025	430368875	27.4773	9.1057	825	680625	561515625	28.7228	9.3789
756	571536	432081216	27.4955	9.1098	826	682276	563559976	28.7402	9.3827
757	573049	433798093	27.5136	9.1138	827	683929	565609283	28.7576	9.3865
758	574564	435519512	27.5318	9.1178	828	685584	567663552	28.7750	9.3902
759	576081	437245479	27.5500	9.1218	829	687241	569722789	28.7924	9.3940
760	577600	438976000	27.5681	9.1258	830	688900	571787000	28.8097	9.3978
761	579121	440711081	27.5862	9.1298	831	690561	573856191	28.8271	9.4016
762	580644	442450728	27.6043	9.1338	832	692224	575930368	28.8444	9.4053
763	582169	444194947	27.6225	9.1378	833	693889	578009537	28.8617	9.4091
764	583696	445943744	27.6405	9.1418	834	695556	580093704	28.8791	9.4129
765	585225	447697125	27.6586	9.1458	835	697225	582182875	28.8964	9.4166
766	586756	449455096	27.6767	9.1498	836	698896	584277056	28.9137	9.4204
767	588289	451217663	27.6948	9.1537	837	700569	586376253	28.9310	9.4241
768	589824	452984832	27.7128	9.1577	838	702244	588480472	28.9482	9.4279
769	591361	454756609	27.7308	9.1617	839	703921	590589719	28.9655	9.4316
770	592900	456533000	27 7489	9.1657	840	705600	592704000	28.9828	9.4354

Table of Squares, Cubes, Square Roots and Cube Roots of Numbers from 1 to 1,000—*Continued.*

NO.	SQUARE.	CUBE.	SQ. RT.	C. RT.	NO.	SQUARE.	CUBE.	SQ. RT.	C. RT.
841	707281	594823321	29.0000	9.4391	911	829921	756058031	30.1828	9.6941
842	708964	596947688	29.0172	9.4429	912	831744	758550528	30.1993	9.6976
843	710649	599077107	29.0345	9.4466	913	833569	761048497	30.2159	9.7012
844	712336	601211584	29.0517	9.4503	914	835396	763551944	30.2324	9.7047
845	714025	603351125	29.0689	9 4541	915	837225	766060875	30.2490	9.7082
846	715716	605495736	29.0861	9.4578	916	839056	768575296	30.2655	9.7118
847	717409	607645423	29.1033	9.4615	917	840889	771095213	30.2820	9.7153
848	719104	609800192	29.1204	9.4652	918	842724	773620632	30.2985	9.7188
849	720801	611960049	29.1376	9.4690	919	844561	776151559	30.3150	9.7224
850	722500	614125000	29.1548	9.4727	920	846400	778688000	30.3315	9.7259
851	724201	616295051	29.1719	9.4764	921	848241	781229961	30.3480	9.7294
852	725904	618470208	29.1890	9.4801	922	850084	783777448	30.3645	9.7329
853	727609	620650477	29 2062	9.4838	923	851929	786330467	30.3809	9.7364
854	729316	622835864	29 2233	9.4875	924	853776	788889024	30.3974	9.7400
855	731025	625026375	29.2404	9.4912	925	855625	791453125	30.4138	9.7435
856	732736	627222016	29.2575	9.4949	926	857476	794022776	30.4302	9.7470
857	734449	629422793	29.2746	9.4986	927	859329	796597983	30.4467	9.7505
858	736164	631628712	29.2916	9.5023	928	861184	799178752	30.4631	9.7540
859	737881	633839779	29.3087	9.5060	929	863041	801765089	30.4795	9.7575
860	739600	636056000	29.3258	9.5097	930	864900	804357000	30.4959	9.7610
861	741321	638277381	29.3428	9.5134	931	866761	806954491	30.5123	9.7645
862	743044	640503928	29.3598	9.5171	932	868624	809557568	30.5287	9.7680
863	744769	642735647	29.3769	9.5207	933	870489	812166237	30.5450	9.7715
864	746496	644972544	29.3939	9.5244	934	872356	814780504	30.5614	9.7750
865	748225	647214625	29.4109	9.5281	935	874225	817400375	30.5778	9.7785
866	749956	649461896	29.4279	9.5317	936	876096	820025856	30.5941	9.7820
867	751689	651714363	29.4449	9.5354	937	877969	822656953	30.6105	9.7854
868	753524	653972032	29.4618	9.5391	938	879844	825293672	30.6268	9.7889
869	755161	656234909	29.4788	9.5427	939	881721	827936019	30.6431	9.7924
870	756900	658503000	29.4958	9.5464	940	883600	830584000	30.6594	9.7959
871	758641	660776311	29.5127	9.5501	941	885481	833237621	30 6757	9.7993
872	760384	663054848	29.5296	9.5537	942	887364	835896888	30.6920	9.8028
873	762129	665338617	29.5466	9.5574	943	889249	838561807	30.7083	9.8063
874	763876	667627624	29.5635	9.5610	944	891136	841232384	30.7246	9.8097
875	765625	669921875	29.5804	9.5647	945	893025	843908625	30.7409	9.8132
876	767376	672221376	29.5973	9.5683	946	894916	846590536	30.7571	9.8167
877	769129	674526133	29.6142	9.5719	947	896809	849278123	30.7734	9.8201
878	770884	676836152	29.6311	9.5756	948	898704	851971392	30.7896	9.8236
879	772641	679151439	29.6479	9.5792	949	900601	854670349	30.8058	9.8270
880	774400	681472000	29.6648	9.5828	950	902500	857375000	30.8221	9.83 5
881	776161	683797842	29.6816	9.5865	951	904401	860085351	30.8383	9.8339
882	777924	686128968	29.6985	9.5901	952	906304	862801408	30.8545	9.8374
883	779689	688465387	29.7153	9.5937	953	908209	865523177	30.8707	9.8408
884	781456	690807104	29.7321	9.5973	954	910116	868250664	30.8869	9.8443
885	783225	693154125	29.7489	9.6010	955	912025	870983875	30.9031	9.8477
886	784996	695506456	29.7658	9.6046	956	913936	873722816	30.9192	9.8511
887	786769	697864103	29.7825	9.6082	957	915849	876467493	30.9354	9.8546
888	788544	700227072	29.7993	9.6118	958	917764	879217912	30.9516	9.8580
889	790321	702595369	29.8161	9.6154	959	919681	881974079	30.9677	9.8613
890	792100	704969000	29.8329	9.6190	960	921600	884736000	30.9839	9.8648
891	793881	707347971	29.8496	9.6226	961	923521	887503681	31.0000	9.8683
892	795664	709732288	29.8664	9.6262	962	925444	890277128	31.0161	9.8717
893	797449	712121957	29.8831	9.6298	963	927369	893056347	31.0322	9.8751
894	799236	714516984	29.8998	9.6334	964	929296	895841344	31.0483	9.8785
895	801025	716917375	29.9166	9.6370	965	931225	898632125	31.0644	9.8819
896	802816	719323136	29.9333	9.6406	966	933156	901428696	31.0805	9.8854
897	804609	721734273	29.9500	9.6442	967	935089	904231063	31.0966	9.8888
898	806404	724150792	29.9666	9.6477	968	937024	907039232	31.1127	9.8922
899	808201	726572699	29.9833	9.6513	969	938961	909853209	31.1288	9.8956
900	810000	729000000	30.0000	9.6549	970	940900	912673000	31 1448	9.8990
901	811801	731432701	30.0167	9.6585	971	942841	915498611	31.1609	9.9024
902	813604	733870808	30.0333	9.6620	972	944784	918330048	31.1769	9.9058
903	815409	736314327	30.0500	9.6656	973	946729	921167317	31.1929	9.9092
904	817216	738763264	30.0666	9.6692	974	948676	924010424	31.2090	9.9126
905	819025	741217625	30.0832	9.6727	975	950625	926859375	31.2250	9.9160
906	820836	743677416	30.0998	9.6763	976	952576	929714176	31.2410	9.9194
907	822649	746142643	30.1164	9.6799	977	954529	932574833	31.2570	9.9227
908	824464	748613312	30.1330	9.6834	978	956484	935441352	31.2730	9.9261
909	826281	751089429	30.1496	9.6870	979	958441	938313739	31.2890	9.9295
910	828100	753571000	30.1662	9.6905	980	960400	941192000	31.3050	9.9329

Table of Squares, Cubes, Square Roots and Cube Roots of Numbers from 1 to 1,000—*Continued.*

NO.	SQUARE.	CUBE.	SQ. RT.	C. RT.	NO.	SQUARE.	CUBE.	SQ. RT.	C. RT.
981	962361	944076141	31.3209	9.9363	991	982081	973242271	31.4802	9.9699
982	964324	946966168	31.3369	9.9396	992	984064	976191488	31.4960	9.9733
983	966289	949862087	31.3528	9.9430	993	986049	979146657	31.5119	9.9766
984	968256	952763904	31.3688	9.9464	994	988036	982107784	31.5278	9.9800
985	970225	955671625	31.3847	9.9497	995	990025	985074875	31.5436	9.9833
986	972196	958585256	31.4006	9.9531	996	992016	988047936	31.5595	9.9866
987	974169	961504803	31.4166	9.9565	997	994009	991026673	31.5753	9.9900
988	976144	964430272	31.4325	9.9598	998	996004	994011992	31.5911	9.9933
989	978121	967361669	31.4484	9.9632	999	998001	997002999	31.6070	9.9967
990	980100	970299000	31.4643	9.9666	1000	1000000	1000000000	31.6228	10.0000

FIRST EIGHT POWERS OF FIRST TEN NUMBERS.

Powers.

1	2	3	4	5	6	7	8
1	1	1	1	1	1	1	1
2	4	8	16	32	64	128	256
3	9	27	81	243	729	2187	6561
4	16	64	256	1024	4096	16384	65536
5	25	125	625	3125	15625	78125	390625
6	36	216	1296	7776	46656	279936	1679616
7	49	343	2401	16807	117649	823543	5764801
8	64	512	4096	32768	262144	2097152	16777216
9	81	729	6561	59049	531441	4782969	43046721
10	100	1,000	10,000	100,000	1,000,000	10,000,000	100,000,000

LENGTHS AND NUMBER OF CUT NAILS TO ONE POUND.

SIZES.	COMMON.	CLINCH.	FENCE.	FINISHING.	FINE.	BARREL.	CASING.	SHINGLE.	BRADS.	TOBACCO.	CUT SPIKES.	LENGTH.
¾ in.	.....	.....	.....	.....	.....	800	.....	.....	.....	.....	.....	¾ in.
⅞ in.	.....	.....	.....	.....	.....	500	.....	.....	.....	.....	.....	⅞ "
2d	800	.....	.....	1100	1000	376	.....	.....	.....	.....	.....	1 "
3d	464	.....	..	720	800	224	.....	.....	.....	.....	.....	1¼ "
4d	296	.....	.....	523	368	180	398	.....	.....	.....	.....	1½ "
5d	224	.....	.....	410	.....	.....	.....	178	.....	130	.....	1¾ "
6d	168	95	84	268	.....	.....	224	.....	126	96	.....	2 "
7d	120	74	64	188	.....	.....	.....	.....	98	82	.....	2¼ "
8d	88	62	48	146	.....	.....	128	74	75	68	.....	2½ "
9d	70	53	36	130	.....	.....	110	60	65	.....	.....	2¾ "
10d	60	46	30	102	.....	.....	91	52	55	.....	28	3 "
12d	48	42	24	76	.....	.....	71	.....	40	.....	.....	3¼ "
16d	36	38	20	62	.....	.....	54	.....	27	.....	22	3½ "
20d	24	33	16	54	.....	.....	40	.....	.....	.....	14½	4 "
30d	17	20	.....	.....	.....	.....	33	.....	.....	.....	12½	4½ "
40d	13	.....	.....	.....	.....	.....	27	.....	.....	.....	9½	5 "
50d	9½	.....	.....	.....	.....	.....	.....	.....	.....	.....	8	5½ "
60d	8	.....	.....	.....	.....	.....	.....	.....	.....	.....	6	6 "
.....	.....	.....	.....	.....	.....	.....	.....	.....	.....	.....	5½	6½ "
.....	.....	.....	.....	.....	.....	.....	.....	.....	.....	.....	4½	7 "
.....	.....	.....	.....	.....	.....	.....	.....	.....	.....	.....	2½	8 "

5 lbs. of 4d, or 3¾ lbs. of 3d, will lay 1000 shingles; 5¾ lbs. of 3d fine will put on 1000 laths, 4 nails to the lath.

STANDARD STEEL WIRE NAILS.

SIZES, LENGTH AND NUMBER TO POUND.

SIZES.	LENGTH.	COMMON.	BARBED COMMON.	CLINCH.	FENCE.	FINISHING.	BARBED FINISHING.	FINE.	BARREL.	CASING.	SMOOTH BOX.	BARBED BOX.	FLOORING BRADS.	BARBED OVAL HEAD CAR NAIL. LIGHT.	BARBED OVAL HEAD CAR NAIL. HEAVY.	SLATING.	BARBED ROOFING.	WIRE SPIKES.
	¾ in.								1500								714	
	⅞ "								1000								469	
2d	1 "	1200	876	710		1558	1558	1550	875	1350	1350	1143				411	411	
3d Fine.	1⅛ "							1140	775									
3d Com.	1¼ "	720	568	429		980	913		560	913	913	885				329	251	
	1⅜ "								390									
4d	1½ "	432	357	274		760	584	760	350	584	584	530		274	165	209	165	
5d	1¾ "	300	235	235	142	575	410			410	410	406		142	118	142	142	
6d	2 "	252	204	157	124	350	268			310	310	299	157	124	103		103	
7d	2¼ "	186	139	139	92	275	238			238	238	210	139	92	76			
8d	2½ "	132	99	99	82	190	164			170	170	170	99	82	69			
9d	2¾ "	105	90	90	62	173	149			150	150	147	90	62	54			
10d	3 "	87	69	83	50	137	105			121	121	121	69	57	50			50
12d	3¼ "	66	53	64	38	98	97			97	97	94	53	47	38			
16d	3½ "	51	43	59	30	81	71			72	72	72	43	43	35			35
20d	4 "	35	31	43	23	71	54			54	54	53		31	26			26
30d	4½ "	27	24							46	46	44		28	24			20
40d	5 "	21	18							36	36	36		21	18			15
50d	5½ "	15												17	14			12
60d	6 "	12												15	13			10
	6½ "																	9
	7 "	3⅜ pounds of 4d Common, or 2⅜ pounds of 3d Common, will lay 1,000 shingles. 3¾ pounds of 3d Fine will put on 1,000 laths, 4 nails to the lath.																7
	8 "																	5
	9 "																	4½

SIZES AND WEIGHTS OF HOT PRESSED SQUARE NUTS.

The sizes are the usual manufacturers', not the Franklin Institute Standard. Both weights and sizes are for the unfinished nut. The weights are calculated, one cubic foot weighing 480 lbs.

Size of Bolt.	Weight of 100 Nuts.	Rough Hole.	Thickness of Nut.	Side of Square.	Diagonal.	No. of Nuts in 100 lbs.
1/4	1.5	7/32	1/4	1/2	.71	6800
5/16	2.9	9/32	5/16	5/8	.88	3480
3/8	4.9	11/32	3/8	3/4	1.06	2050
7/16	7.7	13/32	7/16	7/8	1.24	1290
1/2	8.6	7/16	1/2	7/8	1.24	1170
1/2	11.8	7/16	1/2	1	1.41	850
9/16	16.7	1/2	9/16	1 1/8	1.59	600
5/8	17.7	9/16	5/8	1 1/8	1.59	570
5/8	22.8	9/16	5/8	1 1/4	1.77	440
3/4	32.3	21/32	3/4	1 3/8	1.94	310
3/4	39.8	21/32	3/4	1 1/2	2.12	251
7/8	53.	25/32	7/8	1 5/8	2.30	190
7/8	63.	25/32	7/8	1 3/4	2.47	159
1	68.	7/8	1	1 3/4	2.47	146
1	94.	7/8	1	2	2 83	106
1 1/8	103.	15/16	1 1/8	2	2.83	97
1 1/8	137.	15/16	1 1/8	2 1/4	3.18	73
1 1/4	145.	1 1/16	1 1/4	2 1/4	3 18	69
1 1/4	186.	1 1/16	1 1/4	2 1/2	3.54	54
1 3/8	247.	1 3/16	1 3/8	2 3/4	3.89	41
1 1/2	319.	1 5/16	1 1/2	3	4.24	31.3
1 5/8	400.	1 7/16	1 5/8	3 1/4	4.60	24.8
1 3/4	500.	1 9/16	1 3/4	3 1/2	4.95	19 9
1 7/8	620.	1 11/16	1 7/8	3 3/4	5.30	16.2
2	750.	1 13/16	2	4	5.66	13.4
2 1/8	780.	1 7/8	2 1/8	4	5.66	12.8
2 1/4	930.	2	2 1/4	4 1/4	6.01	10.7
2 3/8	960.	2 1/8	2 3/8	4 1/4	6.01	10 4
2 1/2	1130.	2 1/4	2 1/2	4 1/2	6.36	8.9
2 3/4	1370.	2 7/16	2 3/4	4 3/4	6.72	7.3
3	1610.	2 11/16	3	5	7.07	6.2
3 1/4	2110.	2 15/16	3 1/4	5 1/2	7.78	4.7
3 1/2	2750.	3 1/8	3 1/2	6	8.49	3.6

Meaning of Terms "Brash," "Foxy," "Doatiness," and "Dozy."

"Brash" is when the wood is porous, of a reddish color, and breaks off short, without splinters. It is generally consequent upon the decline of a tree from age. "Foxy," is a yellow or red tinge, indicating incipient decay. "Doatiness," is a speckled stain, but when the timber is called "Dozy" it is understood that dry-rot has commenced; this is closely allied to "Foxiness."

SIZES AND WEIGHTS OF HOT PRESSED HEXAGON NUTS.

The sizes are the usual manufacturers', not the Franklin Institute Standard. Both weights and sizes are for the unfinished nut. The weights are calculated, one cubic foot weighing 480 lbs.

Size of Bolt.	Weight of 100 nuts.	Rough Hole.	Thickness of Nut.	Short Diameter.	Long Diameter.	No. of Nuts in 100 lbs.
1/4	1.3	7/32	1/4	1/2	.58	8000
5/16	2.4	9/32	5/16	5/8	.72	4170
3/8	4.1	11/32	3/8	3/4	.87	2410
7/16	6.8	13/32	7/16	7/8	1.01	1460
1/2	7.1	7/16	1/2	7/8	1.01	1410
1/2	9.8	7/16	1/2	1	1.15	1020
9/16	14.0	1/2	9/16	1 1/8	1.30	710
5/8	14.7	9/16	5/8	1 1/8	1.30	680
5/8	19.1	9/16	5/8	1 1/4	1.44	520
5/8	22.9	9/16	3/4	1 1/4	1.44	440
3/4	27.2	21/32	3/4	1 3/8	1.59	370
3/4	39.	21/32	7/8	1 1/2	1.73	256
7/8	44.	25/32	7/8	1 5/8	1.88	226
7/8	50.	25/32	1	1 5/8	1.88	198
1	57.	7/8	1	1 3/4	2.02	176
1	64.	7/8	1 1/8	1 3/4	2.02	156
1 1/8	96.	15/16	1 1/4	2	2.31	104
1 1/4	134.	1 1/16	1 3/8	2 1/4	2 60	75
1 3/8	180.	1 3/16	1 1/2	2 1/2	2.89	56
1 1/2	235.	1 5/16	1 5/8	2 3/4	3.18	42
1 5/8	300.	1 7/16	1 3/4	3	3.46	33.4
1 3/4	370.	1 9/16	1 7/8	3 1/4	3.75	26 7
1 7/8	460.	1 11/16	2	3 1/2	4.04	21.5
2	450.	1 13/16	2	3 1/2	4.04	22.4
2 1/8	560.	1 7/8	2 1/8	3 3/4	4.33	18.0
2 1/4	560.	2	2 1/4	3 3/4	4.33	17.7
2 3/8	680.	2 1/8	2 3/8	4	4.62	14.7
2 1/2	810.	2 1/4	2 1/2	4 1/4	4.91	12.3
2 3/4	980.	2 7/16	2 3/4	4 1/2	5.20	10.2
3	1150.	2 11/16	3	4 3/4	5 48	8.7
3 1/4	1340.	2 15/16	3 1/4	5	5.77	7.5
3 1/2	1580.	3 1/8	3 1/2	5 1/4	6.06	6.3

The Metric System of Weights and Measures was first suggested about A.D. 1528 by Jean Fernal, physician to Henry II of France. It was proposed for adoption by Talleyrand to the members of the National Assembly of France in 1790, and went into effect January 1st, 1840.

TABLE.

Showing the average number of square and hexagon nuts in a box or keg of 200 pounds of the manufacturers' standard sizes.

SQUARE NUTS.				HEXAGON NUTS.			
Width	Thickness.	Hole.	No. in 200 lbs.	Width.	Thickness.	Hole.	No. in 200 lbs.
½	¼	7/32	14,844	½	¼	7/32	17,332
5/8	5/16	9/32	7,880	5/8	5/16	9/32	8,964
¾	⅜	11/32	4,440	¾	⅜	11/32	5,016
⅞	7/16	13/32	2,732	⅞	7/16	13/32	2,988
⅞	7/16	7/16	2,450	⅞	½	7/16	2,674
1	½	7/16	1,816	1	½	7/16	2,160
1⅛	½	½	1,390	1⅛	9/16	½	1,445
1⅛	5/8	9/16	1,174	1⅛	5/8	9/16	1,310
1¼	5/8	9/16	898	1¼	5/8	9/16	1,028
1⅜	¾	21/32	662	1¼	¾	9/16	920
1½	¾	21/32	538	1½	¾	21/32	752
1⅝	⅞	25/32	392	1½	⅞	21/32	510
1¾	⅞	25/32	326	1⅝	⅞	25/32	450
1¾	1	⅞	304	1⅝	1	25/32	428
2	1	⅞	224	1¾	1	⅞	372
2	1⅛	15/16	214	1¾	1⅛	⅞	336
2¼	1⅛	15/16	152	2	1¼	15/16	211
2¼	1¼	1 1/16	143	2¼	1⅜	1 1/16	159
2½	1¼	1 1/16	108	2½	1½	1 3/16	119
2¾	1⅜	1 3/16	83	2¾	1⅝	1 5/16	88
3	1½	1 5/16	65	3	1¾	1 7/16	69
3¼	1⅝	1 7/16	51	3¼	1⅞	1 9/16	56
3½	1¾	1 9/16	42	3½	2	1 11/16	44
3¾	1⅞	1 11/16	22	3½	2	1 13/16	43
4	2	1 13/16	27	4	2	1 13/16	29

Machine Screw Nuts.

NUMBER.	THREADS.
8	30 and 32
10	24-30 and 32
12	20 and 24
14	20 and 24
16	16-18 and 20
18	16 and 18
20	16 and 18
22	16 and 18
24	14 and 16
26	14 and 16
28	14 and 16
30	14 and 16

Stove Bolt Nuts.

DIAMETER OF BOLT.	THREADS.
5/32	30
3/16	24
7/32	24
¼	18
5/16	18
⅜	18

Relative Value of Non-Conductors.

Wool Felt	1.000
Mineral Wool, No. 2	.832
Mineral Wool with Tar	.715
Sawdust	.680
Mineral Wool, No. 1	.676
Charcoal	.632
Pinewood, across Fiber	.553
Loam, dry and open	.550
Slacked Lime	.480
Gas-house Carbon	.470
Asbestos	.363
Coal Ashes	.345
Coke, in lumps	.277
Air space, undivided	.186

Measures of Ores, Earth, Etc.

13 cubic feet of ordinary gold or silver ore, in mine..... = 1 ton = 2,000 lbs.
20 cubic feet of broken quartz..... = 1 ton = 2,000 lbs.

In calculating the quantity of ore "in place" in a mine, an allowance is generally made for moisture in the ore, determined by the character of the ore.

18 feet of gravel in bank..... = 1 ton.
27 cubic feet of gravel when dry..... = 1 ton.
25 cubic feet of sand..... = 1 ton.
18 cubic feet of earth in bank..... = 1 ton.
27 cubic feet of earth when dry..... = 1 ton.
17 cubic feet of clay..... = 1 ton.
44.8 cubic feet bituminous coal when broken down = 1 long ton, 2240 lbs.
42.3 cubic feet anthracite coal when broken down = 1 long ton, 2240 lbs.
123 cubic feet of Charcoal..... = 1 ton, 2240 lbs.
70.9 cubic feet of Coke..... = 1 ton, 2240 lbs.
1 cubic foot of Anthracite Coal..... = 50 to 55 lbs.
1 cubic foot of Bituminous Coal..... = 45 to 55 lbs.
1 cubic foot Cumberland Coal..... = 53 lbs.
1 cubic foot Cannel Coal..... = 50.3 lbs.
1 cubic foot Charcoal (Hardwood)..... = 18.5 lbs.
1 cubic foot Charcoal (Pine)..... = 18 lbs.
1 cord of Wood, 4 ft. x 4 ft. x 8 ft..... = 128 cubic feet.

Iron Ores.

The chief iron ores are the following: Magnetite, containing, when purest, over 72 per cent of iron.

Hematite (with its varieties, "specular iron," "kidney iron," "micaceous iron," etc.), containing, when purest, nearly 70 per cent.

Limonite (with its varieties, "kidney iron" and "bog iron ore"), containing, when purest, about 60 per cent.

Gothite, containing about 73 per cent Chalybite, with its varieties, "spathose iron ore," "clay band" and "black band," containing, when purest, about 48 per cent. Of these, the first two are anhydrous oxides, the next two hydrous oxides, and the last a carbonate.

In addition to these names, iron ores are named from their physical characteristics.

Hard and soft, which names need no explanation.

Specular, so-called from its bright, shining micaceous look. The term micaceous is also sometimes applied to this variety of ore.

Brown and red hematites, so-called from the color of the ore.

Lubricating Oils.

Mineral oil has no action on zinc and copper, and acts least on brass and most on lead.

Rape oil has no action on brass and tin; acts least on iron and most on copper.

Tallow oil acts least on tin and most on copper.

Lard oil acts least on zinc and most on copper.

Sperm oil acts least on brass and most on zinc.

Iron is least affected by seal oil and most by tallow oil.

Brass is not affected by rape oil, least by seal oil and most by olive oil.

Tin is not affected by rape oil, least by olive oil, and most by cotton-seed oil.

The following are used in compounding lubricating oils:

Lard oil, cotton-seed oil, sperm oil, whale oil, menhaden oil, tallow oil, cocoanut oil, neatsfoot oil, horse oil, castor oil, neutral oil, paraffine oil, animal and mineral gelatine, cylinder stock and axle grease. Alum curds are also used to give "body."

Neutral oil is a product of petroleum too heavy for illuminating, and too light for lubricating purposes. It is used for cutting animal and fish oils, also cylinder stock.

Paraffine oil is a heavier product and a lubricant in itself, and is also used for cutting animal oils, and for thinning cylinder stock.

Cylinder stock is a very heavy product of petroleum, and when pure hardens like tallow.

It has a high fire test, and is the basis of all first-class cylinder oils. Its color is greenish. Lard oil decomposes at about 385 degrees, Fahr., and is unfit for a cylinder oil on this account. Tallow oil, unless deacidized, is unfit for a cylinder oil.

The following formulas will be found useful in mixing oils for lubricating purposes.

Heavy Machinery Oil.

¼ gal. 25 gravity paraffine oil.
¾ gal. best grade cylinder stock.

Engine Oil.

½ gal. best cylinder stock.
¼ gal. neutral oil.
¼ gal. lard oil.

Light Machinery Oil.

⅔ gal. pure W. S. lard oil.
⅓ gal. 25 gravity paraffine oil.

Sewing Machines.

⅔ pure sperm oil.
⅓ 25 gravity paraffine oil, or a cheaper oil as follows:
½ neutral oil.
½ pure W. S. lard oil.

Cylinder Oil.

Best grade of cylinder stock, cut with 25 gravity paraffine oil, so as to make it flow freely.

Any oil largely composed of cylinder stock will thicken in cold weather, and should be cut with 25 gravity paraffine oil, in order to make it flow freely from hand oil can.

None but the following oils are necessary in compounding the best lubricating oils but they should be pure and free from all gritty matter.

Pure sperm oil.
Pure W. S. lard oil.
24 or 25 gravity paraffine oil.
Best grade of cylinder stock.

The following are market quotations for best grades of oils used in compounding lubricating oils. Prices are for car load lots, and subject to fluctuation:

Sperm, bleached winter	per gal	81	cents.
Whale, extra bleached	"	58	"
Menhaden, extra bleached	"	35	"
Tallow, city, prime	"	44	"
Neatsfoot, prime	"	75	"
Black, 29 gravity, 15 cold test	"	9½	"
Cylinder, dark, filtered	"	20	"
Paraffine, red, 21 to 22 gravity	"	14½	"

There are several cheaper grades of above oils, and only the very best grades are quoted above.

A lubricating oil should have viscosity sufficient to prevent its running off the bearing, but too much viscosity creates friction.

A heavy "*body*"—so called in oils, does not always indicate the best oil. A "body" can be given the very poorest possible oils for lubricating purposes.

In the distillation of crude petroleum, the classification of the various products is usually as follows:

All above 88° of Baume's hydrometer is called chymogene; from 88° to 70°, gasoline; from 70° to 50°, naphtha; from 60° to 50°, benzine; from 50° to 35°, kerosene; from 35° to 28°, lubricating oil. Below 28° come the paraffines and cylinder stocks from which lubricating oils are commonly made.

WROUGHT-IRON WELDED STEAM, GAS AND WATER PIPE.

TABLE OF STANDARD DIMENSIONS.

One inch and below, proved to 300 pounds per square inch, hydraulic pressure; 1¼ inch and above, proved to 500 pounds per square inch, hydraulic pressure

DIAMETER.			Thickness.	CIRCUMFERENCE.		TRANSVERSE AREAS.			LENGTH OF PIPE PER SQ. FOOT OF.		Length of pipe containing one cubic foot.	Nominal weight per foot.	Number of threads per inch of screw.
Nominal internal.	Actual external.	Actual internal.		External.	Internal.	External.	Internal.	Metal.	External surface.	Internal surface.			
Inches.	Inches.	Inches.	Inches.	Inches.	Inches.	Sq. Inches.	Sq. Inches.	Sq. Inches.	Feet.	Feet.	Feet.	Pounds.	
⅛	.405	.27	.068	1.272	.848	.129	.0573	.0717	9.44	14.15	2513.	.241	27
¼	.54	.364	.088	1.696	1.144	.229	.1041	.1249	7.075	10.49	1383.3	.42	18
⅜	.675	.494	.091	2.121	1.552	.358	.1917	.1663	5.657	7.73	751.2	.559	18
½	.84	.623	.109	2.639	1.957	.554	.3048	.2492	4.547	6.13	472.4	.837	14
¾	1.05	.824	.113	3.299	2.589	.866	.5333	.3327	3.637	4.635	270.	1.115	14
1	1.315	1.048	.134	4.131	3.292	1.358	.8626	.4954	2.904	3.645	166.9	1.668	11½
1¼	1.66	1.38	.14	5 215	4.335	2.164	1.496	.668	2.301	2.768	96.25	2.244	11½
1½	1.9	1.611	.145	5.969	5.061	2.835	2.038	.797	2.01	2.371	70.66	2.678	11½
2	2.375	2.067	.154	7.461	6.494	4.43	3.356	1.074	1.608	1.848	42.91	3.609	11½
2½	2.875	2.468	.204	9.032	7.753	6.492	4.784	1.708	1.328	1.547	30.1	5.739	8
3	3.5	3.067	.217	10.996	9.636	9.621	7.388	2.243	1.091	1.245	19.5	7.536	8
3½	4.	3.548	.226	12.566	11.146	12.566	9.887	2.679	.955	1.077	14.57	9.001	8
4	4.5	4.026	.237	14.137	12,648	15.904	12.73	3.174	.849	.949	11.31	10.665	8
4½	5.	4.508	.246	15.708	14.162	19.635	15.961	3.674	.764	.848	9.02	12.34	8
5	5.563	5.045	.259	17.477	15.849	24.306	19.99	4.316	.687	.757	7.2	14.502	8
6	6.625	6.065	.28	20.813	19.054	34.472	28.888	5.584	.577	.63	4.98	18.762	8

WROUGHT-IRON WELDED STEAM, GAS AND WATER PIPE.

TABLE OF STANDARD DIMENSIONS—*Continued.*

The taper of wrought-iron steam, gas, and water pipe is 1 in 32 to axis of tube, or ¾-inch to the foot.

DIAMETER.			Thickness.	CIRCUMFRENCE.		TRANSVERSE AREAS.			LENGTH OF PIPE PER SQ. FOOT OF.		Length of pipe containing 1 cubic foot.	Nominal weight per foot.	Number of threads per inch of screw.
Nominal internal.	Actual external.	Actual internal.		External.	Internal.	External.	Internal.	Metal.	External surface.	Internal surface.			
Inches.	Inches.	Inches.	Inches.	Inches.	Inches.	Sq. inches.	Sq. inches.	Sq. inches.	Feet.	Feet.	Feet.	Pounds.	
7	7.625	7.023	.301	23.955	22.063	45.664	38.738	6.926	.501	.544	3.72	23.271	8
8	8.625	7.982	.322	27.096	25.076	58.426	50.04	8.386	.443	.478	2.88	28.177	8
9	9.625	8.937	.344	30.238	28.076	72.76	62.73	10.03	.397	.427	2.29	33.701	8
10	10.75	10.019	.366	33.772	31.477	90.763	78.839	11.924	.355	.382	1.82	40.065	8
11	11.75	11.	.375	36.914	34.558	108.434	95.033	13.401	.325	.347	1.51	45.028	8
12	12.75	12.	.375	40.055	37.7	127.677	113.098	14.579	.299	.319	1.27	48.985	8
13	14.	13.25	.375	43.982	41.626	153.938	137.887	16.051	.273	.288	1.04	53.921	8
14	15.	14.25	.375	47.124	44.768	176.715	159.485	17.23	.255	.268	.903	57.893	8
15	16.	15.43	.284	50.26	48.48	201.06	187.04	14.02	.239	.248	.77	47.11	8
16	17.	16.4	.3	53.41	51.52	226.98	211.24	15.74	.225	.233	.68	52.89	8
17	18.	17.32	.34	56.55	54.41	254.47	235.61	18.86	.212	.221	.61	63.37	8

⅛ to 1¼ inclusive, butt welded.
1½ and upward, lap welded.

Wrought Iron Pipe.

Nominal inside diameter in Inches.	Contents of one foot in length in Gallons.	MEASUREMENTS OF SOCKETS ON PIPE.	
		Actual outside diameter. Inches.	Length of Socket. Inches.
⅛	.002	.60	.81
¼	.002	.78	1.00
⅜	.005	.91	1.10
½	.010	1.10	1.31
¾	.023	1.34	1.56
1	.040	1.66	1.75
1¼	.063	2.00	1.94
1½	.091	2 28	2.19
2	.163	2.81	2.31
2½	.255	3.28	2.70
3	.367	4.02	3.00
3½	.500	4.50	3.12
4	.652	5.10	3 12
4½	.826	5 53	3.12
5	1.02	6.25	3 70
6	1.46	7.34	3.70
7	2.00	8.34	4.31
8	2.61	9.44	4.56
9	3.30	10.47	5.75
10	4 08	11.50	6.25
11	4 93	.....	....
12	5.87	13.78	6.25
13	6.89	.....	....
14	8.00	.....	....
15	9.18	.....	....
16	10.44	.....	....
17	11.79	.....	....

The oldest work on algebra is that of Diophantus, a Greek writer, who flourished as early as the 4th century. It was introduced into Spain by the Saracens about A.D. 900.

It was introduced into Italy by Leonardo de Pisa about A.D. 1202. Algebraic signs were invented by Stifelius of Nuremberg, A.D. 1544.

The introduction of symbols for quantities was made by Francis Vieta of France, in A.D. 1590.

The oldest treatise on arithmetic is by Euclid about 300 years B.C. It was introduced from Egypt into Greece by Thales about 600 years B.C.

Notation by nine digits and zero was known in India as early as the 6th century. This notation was introduced from India into Arabia about A.D. 900. The Indian notation was introduced into France by Gerbert A.D. 991; into Spain A.D. 1050; into England A D. 1253. The oldest text book using the Indian figures, and the decimal system, is that of Avicenna, an Arabian physician who lived in Bokhara about A.D. 1000.

WROUGHT IRON WELDED EXTRA STRONG PIPE.

TABLE OF STANDARD DIMENSIONS.

DIAMETER.			Thickness.	Nearest Wire Gauge.	CIRCUMFERENCE.		TRANSVERSE AREAS.			LENGTH OF PIPE PER SQ. FOOT OF.		Nominal Weight per Foot.
Nominal Internal.	Actual External.	Actual Internal.			External.	Internal.	External.	Internal.	Metal.	External. Surface.	Internal. Surface.	
Ins.	Ins.	Ins.	Ins.	Number.	Ins.	Ins.	Sq. Ins.	Sq. Ins.	Sq. Ins.	Feet.	Feet.	Pounds.
⅛	.405	.205	.1	12½	1.272	.644	.129	.033	.086	9.433	18.632	.29
¼	.54	.294	.123	11	1.696	.924	.229	.068	.161	7.075	12.986	.54
⅜	.675	.421	.127	10½	2.121	1.323	.358	.139	.219	5.657	9.07	.74
½	.84	.542	.149	9	2.639	1.703	.554	.231	.323	4.547	7.046	1.09
¾	1.05	.736	.157	8 ½	3.299	2.312	.866	.452	.414	3.637	5.109	1.39
1	1.315	.951	.182	7	4.131	2.988	1.358	.71	.648	2.904	4.016	2.17
1¼	1.66	1.272	.194	6 ½	5.215	3.996	2.164	1.271	.893	2.301	3.003	3.
1½	1.9	1.494	.203	6	5.969	4.694	2.835	1.753	1.082	2.01	2.556	3.63
2	2.375	1.933	.221	5	7.461	6.073	4.43	2.935	1.495	1.608	1.975	5.02
2½	2.875	2.315	.28	2	9.032	7.273	6.492	4.209	2.283	1.328	1.649	7.67
3	3.5	2.892	.304	1	10.996	9.085	9.621	6.569	3.052	1.091	1.328	10.25
3½	4.	3.358	.321	0	12.566	10.549	12.566	8.856	3.71	.955	1.137	12.47
4	4.5	3.818	.341	0	14.137	11.995	15.904	11.449	4.455	.849	1.	14.97
5	5.563	4.813	.375	00	17.477	15.120	24.306	18.193	6.12	.687	.793	20.54
6	6.625	5.75	.437	000	20.813	18.064	34.472	25.967	8.505	.577	.664	28.58

⅛ to 1¼ inclusive, butt-welded.

1½ and upward, lap-welded.

WROUGHT IRON WELDED DOUBLE EXTRA STRONG PIPE.

TABLE OF STANDARD DIMENSIONS.—*Continued.*

Diameter.			Thickness.	Nearest Wire Gauge.	Circumference.		Transverse Areas.			Length of Pipe per Sq. Foot of.		Nominal Weight per Foot.
Nominal Internal.	Actual External.	Actual Internal.			External.	Internal.	External.	Internal.	Metal.	External Surface.	Internal Surface.	
Ins.	Ins.	Ins.	Ins.	Number.	Ins.	Ins.	Sq. Ins.	Sq. Ins.	Sq. Ins.	Feet.	Feet.	Pounds.
½	.84	.244	.298	1	2.639	.766	.554	.047	.507	4.547	15.667	1.7
¾	1.05	.422	.314	1	3.299	1.326	.866	.139	.727	3.637	9.049	2.44
1	1.315	.587	.364	00	4.131	1.844	1.358	.271	1.087	2.904	6.508	3.65
1¼	1.66	.885	.388	00	5.215	2.78	2.164	.615	1.549	2.304	4.317	5.2
1½	1.9	1.088	.406	000	5.969	3.418	2.835	.93	1.905	2.01	3.511	6.4
2	2.375	1.491	.442	0000	7.461	4.684	4.43	1.744	2.686	1.608	2.561	9.02
2½	2.875	1.755	.560	$\frac{9}{16}$—	9.032	5.513	6.492	2.419	4.073	1.328	2.176	13.68
3	3.5	2.284	.608	$\frac{5}{8}$—	10.996	7.175	9.621	4.097	5.524	1.091	1.672	18.56
3½	4.	2.716	.642	$\frac{5}{8}$+	12.566	8.533	12.566	5.794	6.772	.955	1.406	22.75
4	4.5	3.136	.682	$\frac{11}{16}$—	14.137	9.852	15.904	7.724	8.18	.849	1.217	27.48
5	5.563	4.063	.75	$\frac{3}{4}$	17.477	12.764	24.306	12.965	11.34	.687	.940	38.12
6	6.625	4.875	.875	$\frac{7}{8}$	20.813	15.315	34.472	18.666	15.806	.577	.784	53.11

½ to 1¼ inclusive, butt-welded.

1½ and upward, lap welded.

Tarred or Asphalted Wrought Iron Steam, Gas and Water Pipe.

BUTT-WELDED.		LAP-WELDED.	
Nominal Size Inside Diameter.	Nominal Weight per Foot.	Nominal Size Inside Diameter.	Nominal Weight per Foot.
Inches.	Pounds.	Inches.	Pounds.
¼	.42	1½	2.69
⅜	.56	2	3.66
½	.85	2½	5.77
¾	1.12	3	7.54
1	1.67	3½	9.05
1¼	2.25	4	10.72

Lap-Welded Tuyere Pipe, for Coiling Purposes.

Nominal Size Inside Diameter.	Actual Outside Diameter.	Thickness.	Nominal Weight per Foot.
Inches.	Inches.	Inches.	
1	1.315	$\frac{3}{16}$	2.21
1¼	1.66	$\frac{7}{32}$	3.13

Wrought Iron Stay Bolt Tubes.

Inside Diameter.	Outside Diameter.	Weight per ft., lbs.	Inside Diameter.	Outside Diameter.	Weight per ft., lbs.
$\frac{5}{16}$	$\frac{14}{16}$	1.70	$\frac{7}{16}$	$1\frac{2}{16}$	3.
$\frac{5}{16}$	$\frac{15}{16}$	2.21	$\frac{7}{16}$	$1\frac{2}{16}$	3.10
$\frac{6}{16}$	1	2.40	$\frac{8}{16}$	$1\frac{4}{16}$	3.39
$\frac{6}{16}$	$1\frac{1}{16}$	2.61	$\frac{10}{16}$	$1\frac{6}{16}$	3.99

Thickness of Iron Required for Flush Joint Pipe and Tubing.

SIZE.	5 Inch Pipe.	5 Inch. External Diameter.	6 Inch Pipe.	6 Inch. External Diameter.	7 Inch Pipe.	7 Inch. External Diameter.	8 Inch Pipe.	8 Inch. External Diameter.	9 Inch. Pipe.	9 Inch. External Diameter.
Thickness of Iron, inches..	¼	¼	$\frac{9}{32}$	$\frac{9}{32}$	$\frac{5}{16}$	$\frac{5}{16}$	$\frac{11}{32}$	$\frac{11}{32}$	$\frac{11}{32}$	$\frac{11}{32}$

SIZE.	10 Inch Pipe.	10 Inch. External Diameter.	11 Inch Pipe.	11 Inch. External Diameter.	12 Inch Pipe.	12 Inch. External Diameter.	13 Inch. External Diameter.	14 Inch. External Diameter.	15 Inch. External Diameter.
Thickness of Iron, inches...	⅜	⅜	⅜	⅜	⅜	⅜	$\frac{13}{32}$	$\frac{13}{32}$	$\frac{13}{32}$

CAST IRON FLANGED PIPE.

Inside Diameter.	Thickness.	Weight per Foot.	Safe Pressure.	Length of Sections.	Diameter of Flanges.	HOLES.		
						No. in each Flange.	Size.	Diameter of Circle.
Inch.	Inch.	Lbs.	Pounds. Per Sq. Inch.	Feet.	Inch.	No.	Inch.	Inch.
3	1/4	8	50	5	7	4	5/8	5 3/4
3	5/16	10	100	5	7	4	5/8	5 3/4
3	3/8	12	150	5	7	4	5/8	5 3/4
4	1/4	12	40	6	8	4	3/4	6 3/4
4	5/16	15	70	6	8	4	3/4	6 3/4
4	3/8	20	100	6	8	4	3/4	6 3/4
4	7/16	25	150	6	9	4	3/4	7 1/2
4	1/2	30	200	6	9	4	3/4	7 1/2
5	1/4	15	40	6	9	4	3/4	7 1/2
5	5/16	20	70	6	9	4	3/4	7 1/2
5	3/8	25	100	6	9	5	3/4	7 1/2
5	1/2	30	150	6	10	6	7/8	8 3/4
5	5/8	35	150	6	10	6	7/8	8 3/4
6	1/4	20	40	6	10	6	3/4	8 3/4
6	5/16	25	70	6	10	6	3/4	8 3/4
6	3/8	30	100	6	10	6	3/4	8 3/4
6	1/2	35	125	6	11	6	7/8	9 1/2
6	5/8	40	150	6	11	6	7/8	9 1/2
7	5/16	25	40	8	12	6	3/4	10 1/2
7	3/8	35	70	8	12	6	3/4	10 1/2
7	1/2	45	100	8	13	8	3/4	11 5/8
7	5/8	55	125	8	13	8	7/8	11 5/8
8	5/16	30	40	8	13	8	3/4	11 5/8
8	3/8	40	70	8	13	8	3/4	11 5/8
8	1/2	50	100	8	14	8	7/8	12 1/2
8	5/8	60	125	8	14	8	7/8	12 1/2
10	7/16	50	50	10	16	10	3/4	14 1/4
10	9/16	65	75	10	16	10	3/4	14 1/4
10	11/16	80	100	10	16	10	7/8	14 1/4
10	13/16	100	125	10	16	10	7/8	14 1/4
12	7/16	65	50	10	18	12	3/4	16 3/8
12	9/16	80	75	10	18	12	3/4	16 3/8
12	11/16	95	100	10	18	12	7/8	16 3/8
12	13/16	110	125	10	18	12	7/8	16 3/8

One of the best varnishes for smoke-stacks or steam pipes, is good asphaltum dissolved in oil of turpentine.

Eighty parts of sifted cast-iron turnings, two parts of powdered sal-ammoniac, and one part sulphur made into a thick paste with water and mixed fresh for use, makes a good cement for stopping holes in castings.

Put pure olive oil into a clear glass bottle with strips of sheet lead and expose it to the sun for two or three weeks, then pour off the clear oil and the result is a lubricant which will neither gum nor corrode. It is used for watches and fine machinery of all kinds.

CEMENT FOR JOINTS.—Paris white, ground, four pounds; litharge, ground, ten pounds; yellow ochre, fine, half a pound; half ounce of hemp, cut short; mix well with linseed oil to a stiff putty. This cement is good for joints on steam or water pipes. It will set under water.

Standard Flange Pipe.

Diameter of Pipe.	Length, allowing ⅛ of an inch for Gaskets.	Diameter of Flanges.	Diameter from Center to Center of Holes.	Number of Bolts.	Size of Bolts.	Medium Weight per Length including Flanges.
in.	ft. in.	in.	in.	in.	in.	lbs.
3	11—11⅞	8½	6¾	4	⅝	160
4	11—11⅞	9	7¼	4	⅝	240
6	11—11⅞	12	10⅛	6	⅝	400
8	11—11⅞	14	12⅛	6	¾	580
10	11—11⅞	16	14	8	¾	800
12	11—11⅞	18⅛	16	8	¾	1020
14	11—11⅞	20	18¼	10	¾	1400
16	11—11⅞	23	20 11/16	10	¾	1600
18	11—11⅞	25	22½	12	⅞	1800
20	11—11⅞	28	25½	12	⅞	2100
24	11—11⅞	32	29½	14	⅞	2800
30	11—11⅞	40	36⅞	20	1	4500
36	11—11⅞	46	42⅜	24	1	5200
40	11—11⅞	50	46½	26	1	6200
48	11—11⅞	58	54¾	30	1⅛	8200

How Sound Travels.—In dry air at 82 deg. 1,142 feet per second, or about 775 miles per hour; in water, 4,900 feet per second; in iron, 17,500 feet; in copper, 10,378 feet; and in wood from 12,000 to 16,000 feet per second. In water, a bell heard at 45,000 feet could be heard in the air out of the water but 656 feet. In a balloon the barking of dogs on the ground can be heard at an elevation of 4 miles. Divers on the wreck of the Huzzar frigate, 100 feet under water, at Hell Gate, near New York, heard the paddle wheels of distant steamers hours before they hove in sight. The report of a rifle on a still day may be heard at 5,300 yards; a military band at 5,200 yards. The firing of the English on landing in Egypt was distinctly heard 130 miles. Dr. Jamieson said he heard, during calm weather, every word of a sermon at a distance of two miles.

Mercury freezes at 40 degrees below zero, and melts at 39 degrees. Ether freezes at 47 degrees below zero; wine freezes at 20 degrees; sea water freezes at 28.3 degrees. Alcohol has been exposed to 110 and 120 degrees below zero without freezing.

WEIGHTS OF CAST IRON PIPES, AS USED IN VARIOUS CITIES FOR THEIR MAXIMUM PRESSURES.

Diameter, Inches.	Baltimore.	Boston.	Brooklyn.	Chicago.	Fall River.	Lowell.	Milwaukee.	New York.	Ottawa.	Philadelphia.	Providence.	Richmond.	Rochester.	St. Louis.	Toledo.	Diameter, Inches.
	MAXIMUM HEAD IN FEET AND POUNDS.															
	218 94	180 78	198 86	125 54	260 113	200 87	200 87	100 43	250 108	250 108	180 78	237 103	200 87	170 74	175 76	

Average Weights Per Length of 12 Feet (Including Bells) In Pounds.

3	144	162							168	180		168				3
4	222	240	216	289	288			288	300	228		240	240		282	4
6	342	384	474	438	516	408	420	432		372	372	360	384	420	408	6
8	480	552	660	600	828	588	600		552	504	588	540	540		576	8
10	672				1044					606	774	720	637			10
12	1020	972	1080	1000	1476	1020	1044	1032	1032	952	1020	1200	900	1020	1020	12
14									1500		1236					14
16	1560	1488		1500	2370	1552	1554			1260	1536	1560	1356		1608	16
20	2400	2088	2496		2868	2184	2328	2040		1812	2142	2040	1980	2196	2328	20
24		2772		3000	3084	2896	3198	2820	2424	3684	2868	2760	3180		3180	24
30	4200	4044	4890			4200	4212	4080	3084	3960	4056	3960	4008	3900	4296	30
36		5496	4800	5400		4944		4860		5064	5664			5256		36
48		7272	8304					8352		7020						48

Table of Dimensions and Weights of Cast-Iron Pipes.

3 inch and larger, 12 foot lengths. Smaller, 8 foot lengths.

Size, Inches.	Thickness in Inches.	Weight per foot, Lbs.	Weight per length, Lbs.	Adapted to head of water Feet.
1½	¼	5	35	75 ... .
1½	5/16	6¼	43¾	75 to 125
1½	⅜	7½	52½	125 to 175
1½	7/16	9	63	175 to 225
2	¼	6	42	75 ... .
2	5/16	7½	52½	75 to 125
2	⅜	9	63	125 to 175
2	7/16	10½	73½	175 to 225
3	5/16	11	136	75 ... .
3	⅜	12½	154	75 to 125
3	7/16	15	180	125 to 175
3	½	17½	216	175 to 225
4	5/16	16½	203	75 ... .
4	⅜	18	222	75 to 125
4	13/32	19½	240	125 to 175
4	7/16	21	259	175 to 225
6	⅜	25	309	75 ... .
6	7/16	30½	376	75 to 125
6	15/32	32½	400	125 to 175
6	½	35	432	175 to 225
8	7/16	40½	499	75 ... .
8	15/32	43	530	75 to 125
8	17/32	48½	598	125 to 175
8	19/32	54	666	175 to 225
10	15/32	53	654	75 ... .
10	½	57	703	75 to 125
10	19/32	67	826	125 to 175
10	21/32	73	900	175 to 225
12	½	68	839	75 ... .
12	17/32	72	888	75 to 125
12	⅝	84	1,036	125 to 175
12	23/32	97	1,196	175 to 225
14	17/32	84	1,043	75 ... .
14	19/32	94	1,167	75 to 125
14	11/16	108	1,341	125 to 175
14	13/16	127	1,577	175 to 225
16	9/16	101	1,254	75 ... .
16	⅝	117	1,453	75 to 125
16	¾	134	1,664	125 to 175
16	⅞	155	1,925	175 to 225
18	19/32	120	1,490	75 ... .
18	21/32	132	1,639	75 to 125
18	13/16	162	2,011	125 to 175
18	15/16	187	2,322	175 to 225
20	⅝	140	1,738	75 ... .
20	11/16	154	1,912	75 to 125
20	⅞	194	2,409	125 to 175
20	1	221	2,744	175 to 225

Other weights adapted to any head or pressure.

All pipes are tested to 300 pounds per square inch.

All pipes cast vertically in dry sand, in length of 12 feet, exclusive of the bell, except 1¼ inch and 2 inch.

Standard Weight of Pipe for Gas and Water Per Foot and Per Length, Including Bells.

Diameter.	For Gas.		For Water.		Length of Pipe over All.	Depths of bell or Socket.	Joint room or lead Space.	Depth of lead in Socket.	Weight of lead in Socket.	The average weight of bells of pipe equals about the weight of one foot of the weight of each respective pipe.
	Lbs. per Ft.	Lbs. per Length.	Lbs. per Ft.	Lbs per Length.						
in.					ft. in.	in.	in.	in.	Lbs.	
3	11	132	12	144	12—4	3½	$\frac{5}{16}$	1⅞	3½	
4	18	216	20	240	12—4	3½	$\frac{5}{16}$	1⅞	4¼	
6	28½	342	31½	378	12—4	4	$\frac{5}{16}$	1⅞	6¼	
8	40	480	45	540	12—4	4	$\frac{5}{16}$	1⅞	8¼	
10	55	660	60	720	12—4	4	$\frac{5}{16}$	1⅞	10¼	
12	70	840	80	960	12—4	4	$\frac{5}{16}$	2	13	
14	90	1080	100	1200	12—4	4	$\frac{5}{16}$	2	15	
16	110	1320	125	1500	12—4	4	⅜	2⅛	24¼	
18	140	1680	156	1875	12—4	4	⅜	2⅛	27¼	
20	150	1800	175	2100	12—4	4	⅜	2⅛	30¾	
24	200	2400	230	2760	12—4	4	⅜	2¼	38¼	
30	290	3480	340	4080	12—4	4	$\frac{7}{16}$	2⅜	56¾	
36	360	4320	420	5040	12—4	4	½	2½	79½	
40	420	5040	500	6000	12—4	5	½	2½	88¾	
48	560	6720	670	8040	12—4	5	½	2⅝	111	

5 per cent claimed for variation from 3 to 24 inch, and 3 per cent from 24 to 48 inch.

Pipe 12 feet long has 440 joints per mile.

Good steel will not bear a white heat without falling to pieces, and will crumble under the hammer at a bright red heat, while at a middling heat it may be drawn out under the hammer to a fine point. Care should be taken that before attempting to draw it out to a point, the fracture is not concave, and should it be so, the end should be filed to an obtuse point before operating. Steel should be drawn out to a fine point and plunged into cold water; the fractured point should scratch glass.

To test its toughness, place a fragment on a block of cast-iron; if good, it may be driven by the blow of a hammer into the cast-iron; if poor, it will crush under the blow.

THICKNESS OF METAL REQUIRED UNDER HEADS OF WATER FROM 50 FEET TO 400 FEET, AND WEIGHT OF PIPE PER LENGTH, INCLUDING BELLS.

Diameter.	50 ft. Head.		100 ft. Head.		150 ft. Head.		200 ft. Head.		250 ft. Head.		300 ft. Head.		350 ft. Head.		400 ft. Head.	
	Thickness of Metal.	Weight per Length.	Thickness of Metal.	Weight per Length.	Thickness of Metal.	Weight per Length.	Thickness of Metal.	Weight per Length.	Thickness of Metal.	Weight per Length.	Thickness of Metal.	Weight per Length.	Thickness of Metal.	Weight per Length.	Thickness of Metal.	Weight per Length.
in.	in.	lbs.	in.	lbs.	in.	lbs.	in.	lbs.	in.	lbs.	in.	lbs.	in.	lbs.	in.	lbs.
3	.3292	139	.3352	142	.3412	145	.3472	148	.3532	151	.3592	156	.3652	159	.3712	163
4	.3580	198	.3660	203	.3740	208	.3820	213	.3900	218	.3980	226	.4060	232	.4140	238
6	.4069	321	.4189	342	.4309	352	.4429	364	.4549	375	.4699	390	.4789	400	.4909	411
8	.4488	482	.4648	500	.4808	519	.4968	538	.5128	555	.5288	582	.5448	600	.5608	620
10	.4862	649	.5062	676	.5262	703	.5462	739	.5662	760	.5862	799	.6062	828	.6262	856
12	.5204	828	.5444	869	.5684	908	.5924	949	.6164	1002	.6404	1042	.6644	1073	.6884	1123
14	.5521	1064	.5801	1119	.6081	1175	.6361	1232	.6641	1289	.6921	1346	.7201	1403	.7481	1460
16	.5820	1277	.6140	1350	.6450	1423	.6780	1496	.7100	1569	.7420	1642	.7740	1715	.8060	1788
18	.6102	1502	.6462	1596	.6822	1688	.7182	1781	.7542	1874	.7902	1966	.8262	2060	.8622	2153
20	.6372	1830	.6772	1949	.7172	2067	.7572	2186	.7972	2307	.8372	2428	.8772	2548	.9172	2669
24	.6878	2247	.7358	2408	.7838	2572	.8318	2735	.8798	2899	.9278	3063	.9758	3227	1.0238	3441
30	.7577	3243	.8177	3506	.8777	3771	.9377	4036	.9977	4303	1.0577	4573	1.1177	4840	1.1777	5110
36	.8220	4005	.8940	4369	.9660	4732	1.038	5096	1.110	5459	1.182	5823	1.254	6186	1.326	6550
40	.8624	4664	.9424	5111	1.0224	5559	1.1024	6006	1.1824	6454	1.2624	6901	1.3424	7349	1.4224	7794
48	.9388	6080	1.0348	6722	1.1308	7364	1.2268	8006	1.3228	8649	1.4188	9291	1.5148	9932	1.6108	10575

NOTE.—Pressure of water per square inch is 21 67 lbs. for every 50 feet head.

TABLE OF COMPARISON OF SAFE THICKNESS OF CAST IRON WATER PIPE.

Calculated by various formulas for 65 lbs. and 250 lbs. pressure per square inch.

FORMULA.	KIRKWOOD'S.		SHEDD'S.		TRAUTWINE'S.		FRANCIS'.		MOLESWORTH'S.		DUPUIS'.	
Pressure.	65 lbs.	250 lbs.	65 lbs.	250 lbs.	65 lbs.	250 lbs.	65 lbs.	250 lbs.	65 lbs.	250 lbs.	65 lbs.	250 lbs.
Diameter.	Thickness.	Thickness.	Thick. ness.	Thickness.	Thickness.	Thickness.	Thickness.	Thickness.	Thickness.	Thickness.	Thickness.	Thickness.
Inches.	Inches.	Inches.	Inches.	Inches.	Inches.	Inches.	Inches.	Inches.	Inches.	Inches.	Inches.	Inches.
4	0.46	0.78	0.45	0.58	0.36	0.53	0.40	0.50	0.41	0.50	0.40	0.48
6	0.50	0.99	0.49	0.70	0.39	0.65	0.45	0.60	0.46	0.60	0.44	0.57
8	0.55	1.20	0.54	0.81	0.42	0.76	0.50	0.70	0.50	0.69	0.48	0.64
10	0.60	1.41	0.58	0.92	0.45	0.88	0.55	0.80	0.55	0.78	0.52	0.73
12	0.65	1.62	0.62	1.03	0.48	0.99	0.59	0.89	0.60	0.87	0.57	0.82
14	0.70	1.83	0.67	1.15	0.50	1.11	0.64	0.99	0.62	0.95	0.60	0.89
16	0.74	2.04	0.71	1.26	0.53	1.23	0.70	1.10	0.65	1.03	0.65	0.98
20	0.83	2.45	0.80	1.48	0.59	1.46	0.79	1.29	0.69	1.17	0.73	1.14
24	0.92	2.86	0.89	1.71	0.65	1.69	0.89	1.48	0.73	1.29	0.80	1.38
30	1.07	3.48	1.02	2.05	0.74	2.04	1.03	1.77	0.80	1.50	0.93	1.55
36	1.23	4.15	1.15	2.38	0.83	2.39	1.17	2.07	0.87	1.70	1.05	1.80
42	1.38	4.79	1.28	2.72	0.91	2.73	1.31	2.36	0.94	1.91	1.18	2.05
48	1.54	5.42	1.42	3.06	1.00	3.08	1.45	2.65	1.01	2.12	1.29	2.28

65 lbs. pressure = 150 feet head; 250 pressure = 577.5 feet head.

Capacity of Sewer Pipe.

When the area to be drained and the fall of the sewer per hundred feet is known, the size of the pipe required can be easily determined, by referring to the following table, which shows the number of gallons discharged per minute for specified sizes and grades. In main sewers this flow of course is greatly increased by the added pressure of connecting laterals.

CARRYING CAPACITY—GALLONS PER MINUTE.

Size of Pipe.	1 in. fall per 100 Feet.	2 in. fall per 100 Feet.	3 in fall per 100 Feet.	6 in. fall per 100 Feet.	9 in. fall per 100 Feet.	1 ft. fall per 100 Feet.	2 ft. fall per 100 Feet.	3 ft. fall per 100 Feet.
3 in.....	13	19	23	32	40	46	64	79
4 "	27	38	47	66	81	93	131	163
6 "	75	105	129	183	224	258	364	450
9 "	205	290	355	503	617	711	1006	1240
12 "	422	596	730	1033	1273	1468	2076	2554
15 "	740	1021	1282	1818	2224	2464	3617	4467
18 "	1163	1651	2022	2860	3508	4045	5704	7047
24 "	2396	3387	4152	5871	7202	8303	11744	14466
30 "	4187	5920	7252	10257	12580	14504	20516	25277

Rules for Laying Drainage Pipes.

Soils.	Depth of Pipe.	Distance Apart.
Coarse gravel sand	4 ft. 6 in.	60 ft.
Light sand with gravel	4 " 0 "	50 "
Light loam.....	3 " 6 "	33 "
Loam with clay.....	3 " 2 "	21 "
Loam with gravel.....	3 " 3 "	27 "
Sandy loam.....	3 " 9 "	40 "
Soft clay.....	2 " 9 "	21 "
Stiff clay.....	2 " 6 "	15 "

Greatest fall of rain is 2 inches per hour. This equals 54308.6 gallons per acre.

CEMENT TO FASTEN IRON TO STONE.

Take 10 parts of fine iron filings,
30 " " plaster of Paris,
½ " " Sal ammoniac;
Mix with weak vinegar to a fluid paste and apply at once.

WEIGHTS OF LEAD PIPE.

Caliber.	Weight per Foot.		Caliber.	Weight per Foot.	
	lbs.	oz.		lbs	oz.
¼ inch tubing		6	1½ inch aqueduct	3	
⅜ inch aqueduct		8	ex. light	3	8
light		12	light	4	
medium	1		medium	5	
strong	1	8	strong	6	
ex. strong	2		ex. strong	7	8
½ inch aqueduct		10	1¾ inch ex. light	3	12
ex. light		12	light	4	8
light	1		medium	5	8
medium	1	4	strong	6	8
strong	1	12	ex. strong	8	
ex. strong	2	8	2 inch waste	3	
⅝ inch aqueduct		12	2 inch ex. light	4	
ex. light	1	4	light	5	
light	1	12	medium	7	
medium	2		strong	8	
strong	2	8	ex. strong	9	
ex. strong	3		2½ inch 3-16 thick	8	
¾ inch aqueduct	1		¼ thick	11	
ex. light	1	8	5-16 thick	14	
light	2		⅜ thick	17	
medium	2	4	3 inch waste	5	
strong	3		3-16 thick	9	
ex. strong	3	8	¼ thick	12	
⅞ inch aqueduct	1	8	5-16 thick	16	
ex. light	2		⅜ thick	20	
light	2	8	3½ inch ¼ thick	15	
1 inch aqueduct	1	8	5-16 thick	18	
ex. light	2		⅜ thick	21	
light	2	8	4 inch waste	5	
medium	3	4	¼ thick	16	
strong	4		5-16 thick	21	
ex. strong	4	12	⅜ thick	25	
1¼ inch aqueduct	2		7-16 thick	30	
ex. light	2	8	4½ inch waste	6	
light	3		5 inch waste	8	
medium	3	12			
strong	4	12			
ex. strong	6				

Bars of wrought iron will expand or contract 151200ths of their length for each degree of heat. With the range of temperature of the U. S. from 40° below zero to 120° above equal to 160°, wrought iron will expand or contract more than 1080th of its length, equal to a force of 20,740 lbs., or 9¼ tons per square inch of cross section. Tensile strength increases in from 1 to 6 re-heatings and rollings, from 43,904 lbs. to 61,824 lbs.; in from 6 to 12 it is reduced again to 43,904 lbs.

TABLE OF THICKNESS OF LEAD PIPE.

To bear internal pressures with a safety of 6. taking the ultimate cohesion of lead at 1,400 lbs. per square inch.

Internal Diameter in Inches.	HEADS IN FEET.				
	100	200	300	400	500
	PRESSURE IN LBS. PER SQ. INCH.				
	43.4	86.8	130	174	217
	THICKNESS IN INCHES.				
¼	.026	.055	.089	.128	.171
⅜	.038	.083	.134	.192	.256
½	.051	.111	.179	.256	.341
⅝	.064	.138	.223	.320	.427
¾	.076	.166	.268	.383	.512
⅞	.089	.193	.313	.447	.597
1	.102	.221	.357	.511	.682
1¼	.127	.276	.447	.639	.853
1½	.153	332	.536	.767	1.02
1¾	.178	.387	.626	.895	1.20
2	.204	.442	.714	1.02	1.36

PURE BLOCK TIN PIPE.

CALIBER.	Wt. pr. Foot.		CALIBER.	Wt. per Foot.	
	Lbs.	Oz.		Lbs.	Oz.
⅛ inch strong		2½	½ inch dbl. ex. strong		15
¼ inch ex. strong		5	⅝ inch ex. strong		9
dbl. ex. strong		6	dbl. ex. strong		14
5-16 inch dbl.ex strong		6½	¾ inch ex. strong		11
⅜ inch ex. strong		6	dbl. ex. strong	1	0
dbl. ex. strong		8	1 inch ex. strong		14
½ inch strong		6½	dbl. ex. strong	1	4
ex. strong		10			

A mixture of 30 per cent of wrought iron with cast-iron, carefully fused in a crucible, increases the strength of cast-iron one-third.

Chilling the underside of cast-iron, materially increases its strength. Chilled bars of cast-iron deflect more readily than unchilled. Cast-iron, at 2.5 tons per square inch, will extend same as wrought iron at 5.6 tons.

WEIGHT OF RIVETED IRON AND COPPER PIPES

Per Running Foot, Including Laps for Riveting and Calking, but Not the Weight of Rivets.

Inter. Diam.	Thick-ness.	Iron.	Copper.	Inter. Diam.	Thick-ness.	Iron.	Copper.
In.	In.	Lbs.	Lbs.	In.	In.	Lbs.	Lbs.
5	1/8	7.12	8.14	11	3/16	22.75	26.30
	3/16	10.68	12.21		1/4	30.50	34.85
	1/4	14.25	16.28		5/16	38.15	43.70
5½	1/8	7.78	8.89	12	3/16	24.08	28.50
	3/16	11.66	13.33		1/4	33.13	38.00
	1/4	15.56	17.78		5/16	41.25	47.50
6	1/8	8.44	9.64	13	3/16	26.75	31.20
	3/16	12.65	14.46		1/4	35.75	41.50
	1/4	16.88	19.29		5/16	44.55	51.80
6½	1/8	9.10	10.40	14	3/16	28.75	33.20
	3/16	13.65	15.60		1/4	38.50	44.00
	1/4	18.2	20.80		5/16	47.00	55.50
7	1/8	9.78	11.18	15	3/16	30.83	35.50
	3/16	14.68	16.78		1/4	41.00	47.25
	1/4	19.57	22.37		5/16	51.50	59.30
7½	1/8	10.49	12.00	16	1/4	43.75	50.50
	3/16	15.73	17.98		5/16	54.75	63.00
	1/4	20.90	23.87	17	1/4	46.50	53.20
8	1/8	11.20	12.60		5/16	58.00	66.50
	3/16	16.70	19.08	18	1/4	49.20	56.50
	1/4	22.25	25.44		5/16	61.50	70.50
8½	1/8	11.9	13.50	19	1/4	51.75	59.50
	3/16	18.0	20.20		5/16	64.70	75.00
	1/4	23.60	26.96	20	1/4	55.60	62.60
9	3/16	18.75	21.50		5/16	68.00	78.00
	1/4	25.00	28.58	24	5/16	81.33	93.60
9½	3/16	19.75	22.50	25	5/16	84.50	97.50
	1/4	26.33	30.09	28	5/16	94.56	107.95
10	3/16	21.00	24.00	30	5/16	101.14	115.60
	1/4	27.75	31.71				
	5/16	34.50	40.00				

WEIGHTS OF GALVANIZED IRON PIPE.

IN POUNDS PER RUNNING FOOT.

Diam of pipe in ins.	No. 24 Gauge.	No. 22 Gauge.	No. 20 Gauge.	No. 18 Gauge.	No. 16 Gauge.	Diam. of pipe in ins.	No. 24 Gauge.	No. 22 Gauge	No. 20 Gauge	No. 18 Gauge	No. 16 Gauge
4	1½	1¾	2	2½	3¼	28	9½	11½	14	18	21½
5	1¾	2	2½	3½	4	30	10	12¼	15	19½	23
6	2⅛	2½	3	4	4¾	32	10¾	13	16	21	24½
7	2½	3	3½	4½	5½	34	11½	14	17	22	26
8	2¾	3⅜	4	5¼	6¾	36	12	15	18	24	27½
9	3¼	3¾	4½	5¾	7	38	12¾	16	19	25	29½
10	3½	4	5	6½	7¾	40	13½	17	20	26½	31
11	3¾	4¼	5½	7	8¼	42		18	21	28	33
12	4	4⅝	6	7½	9	44		19	22	30	35
13	4¼	5	6½	8½	10	46		20	23	31½	37
14	4⅝	5½	7	9	11	48		21	24	33	39
15	5	6	7½	9¾	12	50		22	25	35	41
16	5⅜	6½	8	10¼	13	52			26	36½	43
18	6	7¼	9	11½	14¼	54			27	38½	45
20	6⅝	8	10	12¾	15½	56			28	40	47
22	7¼	8¾	11	14	16¾	58			29	42	49
24	8	9⅝	12	15¼	18½	60			30	44	51
26	8¾	10½	13	16½	20						

TABLE

Showing Square Feet of Surface on Pipes of Various Lengths and Diameters.

LENGTH FT.	NOMINAL INSIDE DIAMETER.						LENGTH FT.	NOMINAL INSIDE DIAMETER.					
	1″	1¼″	1½″	2″	2½″	3″		1″	1¼″	1½″	2″	2½″	3″
	Sq. ft.	Sq. ft.	Sq. ft.	Sq. ft.	Sq. ft.	Sq. ft.		Sq. ft.	Sq. ft.	Sq. ft.	Sq. ft.	Sq. ft.	Sq. ft.
1	.344	.434	.497	.621	.752	.916	51	17.5	22.1	25.3	31.7	38.4	46.7
2	.7	.9	1.0	1.2	1.5	1.8	52	17.9	22.6	25.8	32.3	39.1	47.6
3	1.0	1.3	1.5	1.9	2.3	2.7	53	18.2	23.0	26.3	32.9	39.9	48.5
4	1.4	1.7	2.0	2.5	3.0	3.7	54	18.6	23.4	26.8	33.5	40.6	49.5
5	1.7	2.2	2.5	3.1	3.8	4.6	55	18.9	23.9	27.3	34.2	41.4	50.4
6	2.1	2.6	3.0	3.7	4.5	5.5	56	19.3	24.3	27.8	34.8	42.1	51.3
7	2.4	3.0	3.5	4.3	5.3	6.4	57	19.6	24.7	28.3	35.4	42.9	52.2
8	2.8	3.5	4.0	5.0	6.0	7.3	58	20.0	25.2	28.8	36.0	43.6	53.1
9	3.1	3.9	4.5	5.6	6.8	8.2	59	20.3	25.6	29.3	36.6	44.4	54.0
10	3.4	4.3	5.0	6.2	7.5	9.2	60	20.6	26.0	29.8	37.3	45.1	55.0
11	3.8	4.8	5.5	6.8	8.3	10.1	61	21.0	26.5	30.3	37.9	45.9	55.9
12	4.1	5.2	6.0	7.5	9.0	11.0	62	21.3	26.9	30.8	38.5	46.6	56.8
13	4.5	5.6	6.5	8.1	9.8	11.9	63	21.7	27.3	31.3	39.1	47.4	57.7
14	4.8	6.1	7.0	8.7	10.5	12.8	64	22.0	27.8	31.8	39.7	48.1	58.6
15	5.2	6.5	7.5	9.3	11.3	13.7	65	22.4	28.2	32.3	40.4	48.9	59.5
16	5.5	6.9	8.0	9.9	12.0	14.7	66	22.7	28.6	32.8	41.0	49.6	60.5
17	5.8	7.4	8.5	10.6	12.8	15.6	67	23.0	29.1	33.3	41.6	50.4	61.4
18	6.2	7.8	8.9	11.2	13.5	16.5	68	23.4	29.5	33.8	42.2	51.1	62.3
19	6.5	8.2	9.4	11.8	14.3	17.4	69	23.7	29.9	34.3	42.8	51.9	63.2
20	6.9	8.7	9.9	12.4	15.0	18.3	70	24.1	30.4	34.8	43.5	52.6	64.1
21	7.2	9.1	10.4	13.0	15.8	19.2	71	24.4	30.8	35.3	44.1	53.4	65.0
22	7.6	9.5	10.9	13.7	16.5	20.2	72	24.8	31.2	35.8	44.7	54.1	66.0
23	7.9	10.0	11.4	14.3	17.3	21.1	73	25.1	31.7	36.3	45.3	54.9	66.9
24	8.3	10.4	11.9	14.9	18.0	22.0	74	25.5	32.1	36.8	46.0	55.6	67.8
25	8.6	10.9	12.4	15.5	18.8	22.9	75	25.8	32.6	37.3	46.6	56.4	68.7
26	8.9	11.3	12.9	16.1	19.6	23.8	76	26.1	33.0	37.8	47.2	57.2	69.6
27	9.3	11.7	13.4	16.8	20.3	24.7	77	26.5	33.4	38.3	47.8	57.9	70.5
28	9.6	12.2	13.9	17.4	21.1	25.6	78	26.8	33.9	38.8	48.4	58.7	71.4
29	10.0	12.6	14.4	18.0	21.8	26.6	79	27.2	34.3	39.3	49.1	59.4	72.4
30	10.3	13.0	14.9	18.6	22.6	27.5	80	27.5	34.7	39.8	49.7	60.2	73.3
31	10.7	13.5	15.4	19.3	23.3	28.4	81	27.9	35.2	40.3	50.3	60.9	74.2
32	11.0	13.9	15.9	19.9	24.1	29.3	82	28.2	35.6	40.8	50.9	61.7	75.1
33	11.4	14.3	16.4	20.5	24.8	30.2	83	28.6	36.0	41.3	51.5	62.4	76.0
34	11.7	14.8	16.9	21.1	25.6	31.1	84	28.9	36.5	41.7	52.2	63.2	76.9
35	12.0	15.2	17.4	21.7	26.3	32.1	85	29.2	36.9	42.2	52.8	63.9	77.9
36	12.4	15.6	17.9	22.4	27.1	33.0	86	29.6	37.3	42.7	53.4	64.7	78.8
37	12.7	16.1	18.4	23.0	27.8	33.9	87	29.9	37.8	43.2	54.0	65.4	79.7
38	13.1	16.5	18.9	23.6	28.6	34.8	88	30.3	38.2	43.7	54.6	66.2	80.6
39	13.4	16.9	19.4	24.2	29.3	35.7	89	30.6	38.6	44.2	55.3	66.9	81.5
40	13.8	17.4	19.9	24.8	30.1	36.6	90	31.0	39.1	44.7	55.9	67.7	82.4
41	14.1	17.8	20.4	25.5	30.8	37.6	91	31.3	39.5	45.2	56.5	68.4	83.4
42	14.4	18.2	20.9	26.1	31.6	38.5	92	31.6	39.9	45.7	57.1	69.2	84.3
43	14.8	18.7	21.4	26.7	32.3	39.4	93	32.0	40.4	46.2	57.8	70.0	85.2
44	15.1	19.1	21.9	27.3	33.1	40.3	94	32.3	40.8	46.7	58.4	70.7	86.1
45	15.5	19.5	22.4	27.9	33.8	41.2	95	32.7	41.2	47.2	59.0	71.4	87.0
46	15.8	20.0	22.9	28.6	34.6	42.1	96	33.0	41.7	47.7	59.6	72.2	87.9
47	16.2	20.4	23.4	29.2	35.3	43.1	97	33.4	42.1	48.2	60.2	72.9	88.9
48	16.5	20.8	23.9	29.8	36.1	44.0	98	33.7	42.5	48.7	60.9	73.7	89.8
49	16.9	21.3	24.4	30.4	36.8	44.9	99	34.1	43.0	49.2	61.5	74.4	90.7
50	17.2	21.7	24.9	31.1	37.6	45.8	100	34.4	43.4	49.7	62.1	75.2	91.6

A cast-iron beam will bend with one-third of its breaking weight, if the load is laid on gradually—one-sixth if laid on at once, will produce the same effect, hence should be capable of bearing six times the greatest weight which can be laid on it.

DIAMETER OF BLAST PIPES.

Table Showing the Necessary Increase in Diameter for the Different Lengths.

It will be seen by reference to the following table, that the diameter of pipe for transmitting or carrying air from one point to another, changes with the length or distance which the air is carried from the blower to the furnace, or other point of delivery.

As air moves through pipes, a portion of its force is retarded by the friction of its particles along the sides of the pipe, and the loss of pressure from this source increases directly as the length of the pipe, and as the square of the velocity of the moving air.

This fact has long been known, and many experimenters and engineers, by close observation and long continued experiments have established formulas by which the loss of pressure and the additional amount of power required to force air or gases through pipes of any length and diameter may be computed.

As these formulas are commonly expressed in algebraic notation, not in general use, we have thought it desirable to arrange a table showing at a glance all the necessary proportionate increase in diameter and length of blast pipe and conical mouth-pieces, in keeping up the pressure to the point of delivery. It is often the case where a *blower is condemned as being inefficient*, the cause of its failure is, that the pipe connections are too small for their length and large number of short bends, without regard to making the pipe tight, which is a necessity.

The table, diameter of pipes, given below, showing the necessary increase in the size of pipes in proportion to the length is what we call a practical one, and experience has proven the necessity for it.

LENGTH OF PIPE.	30 FT.	60 FT.	90 FT.	120 FT	150 FT	180 FT.	210 FT.	240 FT	270 FT	300 FT
Diameter of Blower. Outlet in Inches.	Diameter of Pipe should be	Diameter of Pipe. should be	Diameter of Pipe should be	Diameter of Pipe should be	Diameter of Pipe should be	Diameter of Pipe should be	Diameter of Pipe should be	Diameter of Pipe should be	Diameter of Pipe should be	Diameter of Pipe should be
3	3¼	3⅝	4	4¼	4½	4¾	5	5⅛	5⅜	5½
3½	3¾	4⅛	4½	4⅞	5	5¼	5½	5⅝	5⅞	6⅛
4	4⅜	4¾	5⅛	5⅜	5¾	6	6¼	6½	6¾	7
4½	5	5⅜	5¾	6	6⅜	6¾	7	7¼	7½	7⅞
5	5½	6	6⅜	6¾	7⅛	7½	7¾	8⅛	8⅜	8¾
6	6½	7	7⅜	8	8½	9	9⅜	9¾	10⅛	10½
7	7⅝	8¼	8⅞	9⅜	10	10⅜	10⅞	11⅜	11¾	12⅛
8	8¾	9½	10⅛	10¾	11⅜	11⅞	12⅜	12⅝	13⅜	13⅞
9	10	10¾	11½	12⅛	12¾	13⅜	14	14½	15⅛	15⅝
10	11	11⅞	12¾	13½	14¼	14⅞	15½	16⅛	16¾	17⅜
11	12	13	13⅞	14¾	15⅝	16⅜	17⅛	17¾	18½	19⅛
12	13⅛	14¼	15¼	16⅛	17	17⅞	18⅝	19⅜	20⅛	20⅞
13	14¼	15⅜	16½	17½	18⅜	19¼	20⅛	21	21¾	22⅝
14	15⅜	16⅝	17¾	18⅞	19¾	20¾	21¾	22⅝	23½	24¼
15	16½	17¾	19	20⅛	21¼	22¼	23¼	24¼	25⅛	26
16	17½	19	20⅜	21½	22⅝	23¾	24¾	25⅞	26⅞	27¾
17	17⅝	20⅛	21½	22¾	24	25¼	26⅜	27½	28½	29½
18	19¾	21⅜	22¾	24¼	25½	26¾	27⅞	29⅛	30⅛	31¼
19	20⅞	22½	24	25½	27	28¼	29½	30¾	31⅞	33
20	22	23⅝	25⅜	27⅞	28⅜	29¾	31	32¼	33½	34¼
21	23	24⅞	26⅝	28¼	29¾	31⅛	32½	33⅞	35¼	36⅜
22	24⅛	26⅛	27⅞	29½	31⅛	32⅝	34⅛	35½	36⅞	38⅛
23	25¼	27¼	29⅛	30⅞	32½	34⅛	35⅝	37⅛	38½	39⅞
24	26½	28½	30⅜	32¼	34	35⅝	37¼	38¾	40¼	41⅝
Length of Pipe.	30 ft.	60 ft.	90 ft.	120 ft.	150 ft.	180 ft.	210 ft.	240 ft.	270 ft.	300 ft.
Length of Mouth-piece.	9 in.	15 in.	21 in.	27 in.	33 in.	39 in.	42 in.	48 in.	54 in.	60 in.

The longer the Pipe, the larger the Diameter.

To find the weight, per running foot, of pipes and tubes.

RULE: Square the external diameter of the pipe, or tube, in inches. Square, also, the internal diameter. Subtract the latter from the former, and multiply the remainder by the constant number 2.64 for wrought iron, 2.45 for cast iron 2.82 for brass, 3.03 for copper, and 3.86 for lead, and the product will be the weight per lineal foot.

To find the loss of pressure in air pipes by reason of friction.

RULE: Divide the coefficients, in the following table, corresponding to the diameter of the pipe, and multiply the quotient by the square of the number of cubic feet of air passing per second, and this product by the weight of one cubic foot of air in ounces, and this product by the constant number .000733, and this product by the length of pipe in yards, and the result will be the total loss of pressure in line of pipe.

Table of Coefficients.

Diameter of Pipe in Inches.	Coefficient.	Diameter of Pipe in Inches.	Coefficient.
.394	58395000.00	5.905	25.32
.787	1169250.00	7.087	9.918
1.063	222800.00	7.874	5.785
1.575	26280.00	9.055	2.836
2.126	5267.50	10.236	1.517
2.362	3010.40	11.024	1.042
3.150	601.00	12.205	0.621
3.543	356.90	13.386	0.339
3.937	206.20	14.173	0.291
5.118	52.92	14.961	0.221

Cubic feet of air passing per second, may be calculated from the strokes of the air compressor.

Medical Divisions of the Gallon.

69 Minims—(M)	=	1 Fluidram	M	f ʒ	f ℥
8 Fluidrams—(f ʒ)	=	1 Fluidounce	= 480		
16 Fluidounces—(f ℥)	=	1 Pint	= 7,680	= 128	
8 Pints—(O)	=	1 Gallon (Cong.)	= 61,440	= 1,024	= 128

O is an abbreviation of *octans*, the Latin for one-eighth; *Cong.* for *congiarium*, the Latin for gallon.

1 Common teaspoonful = 45 drops.
1 Common teaspoonful = ¼ common tablespoonful = 1 fluidram.
1 Common tablespoonful = ⅛ common teacup = about ½ fluidounce.
1 Common teacup = about 4 fluidounces.
1 Pint of water = about 1 pound.

℞ is an abbreviation for *recipe*, or take; ä aa., for equal quantities; j. for 1; ij. for 2; iij. for 3; *ss.* for *semi*, or half; gr. for grain; P for *particula*, or little part; P. æq. for equal parts; q. p., as much as you please.

AREAS AND CONTENTS OF PIPES, AND SQUARE ROOTS OF DIAMETERS.

Diameter in Inches.	Diameter in Feet.	Area in sq. ft.; also cubic ft. in 1 ft. length of Pipe.	Square Root of Diameter in Feet.	Diameter in Inches.	Diameter in Feet.	Area in sq. ft.; also cubic ft. in 1 ft. length of Pipe.	Square Root of Diameter in Feet.
¼	.0208	.0003	.145	11½	.9583	.7213	.979
⅜	.0313	.0008	.177	11¾	.9792	.7530	.990
½	.0417	.0014	.204	12	1.	.7854	1.000
¾	.0625	.0031	.250	12¼	1.021	.8184	1.010
1	.0833	.0055	.289	12½	1.042	.8522	1.020
1¼	.1042	.0085	.322	12¾	1.063	.8866	1.031
1½	.1250	.0123	.354	13	1.083	.9218	1.041
2	.1667	.0218	.408	13¼	1.104	.9576	1.051
2½	.2083	.0341	.457	13½	1.125	.9940	1.060
2¾	.2292	.0412	.478	13¾	1.146	1.031	1.070
3	.2500	.0491	.500	14	1.167	1.069	1.080
3¼	.2708	.0576	.520	14½	1.208	1.147	1.099
3½	.2917	.0668	.540	14¾	1.229	1.187	1.110
3¾	.3125	.0767	.560	15	1.250	1.227	1.118
4	.3333	.0873	.579	15¼	1.271	1.268	1.127
4¼	.3542	.0985	.596	15½	1.292	1.310	1.136
4½	.3750	.1104	.612	15¾	1.313	1.353	1.146
4¾	.3958	.1231	.629	16	1.333	1.396	1.155
5	.4167	.1363	.645	16¼	1.354	1.440	1.163
5¼	.4375	.1503	.660	16½	1.375	1.485	1.172
5½	.4583	.1650	.677	16¾	1.396	1.530	1.181
5¾	.4792	.1803	.693	17	1.417	1.576	1.190
6	.5	.1964	.707	17¼	1.437	1.623	1.199
6¼	.5208	.2131	.722	17½	1.458	1.670	1.207
6½	.5417	.2304	.736	17¾	1.479	1.718	1.216
6¾	.5625	.2485	.750	18	1.5	1.767	1.224
7	.5833	.2673	.764	18½	1.542	1.867	1.241
7¼	.6042	.2867	.777	19	1.583	1.969	1.258
7½	.6250	.3068	.791	20	1.667	2.182	1.291
7¾	.6458	.3276	.803	21	1.750	2.405	1.323
8	.6667	.3491	.817	22	1.833	2.640	1.354
8¼	.6875	.3712	.829	23	1.917	2.885	1.384
8½	.7083	.3941	.841	24	2.000	3.142	1.414
8¾	.7292	.4176	.854	25	2.083	3.409	1.443
9	.75	.4418	.866	26	2.166	3.687	1.472
9¼	.7708	.4667	.879	27	2.250	3.976	1.500
9½	.7917	.4922	.890	28	2.333	4.276	1.528
9¾	.8125	.5185	.902	29	2.416	4.587	1.555
10	.8333	.5454	.913	30	2.500	4.909	1.581
10¼	.8542	.5730	.924	32	2.666	5.585	1.633
10½	.8750	.6013	.935	35	2.916	6.681	1.708
10¾	.8958	.6303	.946	40	3.333	8.727	1.825
11	.9167	.6600	.957	42	3.500	9.621	1.871
11¼	.9375	.6903	.968				

Friction-loss in Pounds Pressure, for Each 100 Feet of Length in Different Size Clean Iron Pipes Discharging Given Quantities of Water per Minute. Also Velocity of Flow in Pipe, in Feet, per Second.

Gallons Discharged per Minute.	½ INCH.		¾ INCH.		1 INCH.		1¼ INCH.		1½ INCH.		2 INCH.		2½ INCH.		3 INCH.		4 INCH.		6 INCH.		Gallons Discharged per Minute.
	Veloc. in Pipe per Second.	Friction Loss in Pounds.	Veloc. in Pipe per Second.	Friction Loss in Pounds.	Veloc in Pipe per Second.	Friction Loss in Pounds.	Veloc. in Pipe per Second.	Friction Loss in Pounds.	Veloc. in Pipe per Second.	Friction Loss in Pounds.	Veloc. in Pipe per Second.	Friction Loss in Pounds.	Veloc. in Pipe per Second.	Friction Loss in Pounds.	Veloc. in Pipe per Second.	Friction Loss in Pounds.	Veloc. in Pipe per Second.	Friction Loss in Pounds.	Veloc. in Pipe per Second.	Friction Loss in Pounds.	
5	8.17	24.6	3.63	3.3	2.04	0.84	1.31	0.31	0.91	0.12											5
10	16.3	96.0	7.25	13.0	4.08	3.16	2.61	1.05	1.82	0.47	1.02	0.12									10
15			10.9	28.7	6.13	6.98	3.92	2.38	2.73	0.97											15
20			14.5	50.4	8.17	12.3	5.22	4.07	3.63	1.66	2.04	0.42									20
25			18.1	78.0	10.2	19.0	6.53	6.40	4.54	2.62			1.63	0.21	1.13	0.10					25
30					12.3	27.5	7.84	9.15	5.45	3.75	3.06	0.91									30
35					14.3	37.0	9.14	12.4	6.36	5.05											35
40					16.3	48.0	10.4	16.1	7.26	6.52	4.09	1.60									40
45							11.7	20.2	8.17	8.15											45
50							13.1	24.9	9.08	10.0	5.11	2.44	3.26	0.81	2.27	0.35	1.28	0.09			50
75							19.6	56.1	13.6	22.4	7.66	5.32	4.90	1.80	3.40	0.74					75
100									18.2	39.0	10.2	9.46	6.53	3.20	4.54	1.31	2.55	0.33	1.13	0.05	100
125											12.8	14.9	8.16	4.89	5.67	1.99					125
150											15.3	21.2	9.80	7.00	6.81	2.85	3.83	0.69	1.70	0.10	150
175											17.1	28.1	11.4	9.46	7.94	3.85					175
200											20.4	37.5	13.1	12.47	9.08	5.02	5.11	1.22	2.27	0.17	200
250													16.3	19.66	11.3	7.76	6.39	1.89	2.84	0.26	250
300													19.6	28.06	13.6	11.2	7.66	2.66	3.40	0.37	300
350															15.9	15.2	8.94	3.65	3.97	0.50	350
400															18.2	19.5	10.2	4.73	4.54	0.65	400
450															20.4	25.0	11.5	6.01	5.11	0.81	450
500															22.7	30.8	12.8	7.43	5.67	0.96	500

APPLICATION OF TABLE.—What is the friction loss in pounds pressure, pumping 100 gallons per minute through a pipe 3 inches in diameter and 1,000 feet long?

By table we find the loss to be 1.31 pounds for each hundred feet. Consequently, for 1,000 feet, the friction loss will be 10 times 1.31, or 13.10 pounds. And so on for any other diameter, or length of pipe.

Friction Loss.—*Continued.*

Friction loss in pounds pressure, for each 100 feet of length, in different size clean iron pipes, discharging given quantities of water per minute. Also velocity of flow in pipe, in feet per second.

Gallons Discharged per Minute.	6 INCH.		8 INCH.		10 INCH.		12 INCH.		14 INCH.		16 INCH.		18 INCH.		20 INCH.		24 INCH.		30 INCH.		Gallons Discharged per Minute.
	Veloc. in Pipe per Second.	Friction Loss in Pounds.	Veloc. in Pipe per Second.	Friction Loss in Pounds.	Veloc. in Pipe per Second.	Friction Loss in Pounds.	Veloc. in Pipe per Second.	Friction Loss in Pounds.	Veloc. in Pipe per Second.	Friction Loss in Pounds.	Veloc. in Pipe per Second.	Friction Loss in Pounds.	Veloc. in Pipe per Second.	Friction Loss in Pounds.	Veloc. in Pipe per Second.	Friction Loss in Pounds.	Veloc. in Pipe per Second.	Friction Loss in Pounds.	Veloc. in Pipe per Second.	Friction Loss in Pounds.	
250	2.84	0.26	1.59	0.07	1.02	0.03	0.71	0.01	.....	.....	.....	.....	.....	.....	.....	.....	.....	.....	.....	.....	250
500	5.67	0.98	3.19	0.25	2.04	0.09	1.42	0.04	1.04	0.017	0.80	0.009	0.63	0.005	.....	.....	.....	.....	.....	.....	500
750	8.51	2.21	4.79	0.53	3.06	0.18	2.13	0.08	.....	.....	.....	.....	.....	.....	.....	.....	.....	.....	.....	.....	750
1,000	11.3	3.88	6.38	0.94	4.08	0.32	2.84	0.13	2.08	0.062	1.60	0.036	1.26	0.020	1.02	0.012	0.72	0.005	0.45	0.002	1,000
1,250	.....	.....	7.97	1.46	5.10	0.49	3.55	0.20	.....	.....	.....	.....	.....	.....	.....	.....	.....	.....	.....	.....	1,250
1,500	.....	.....	9.57	2.09	6.12	0.70	4.26	0.29	3.13	0.135	2.39	0.071	1.89	0.040	.....	.....	.....	.....	.....	.....	1,500
1,750	.....	.....	.....	.....	7.15	0.95	4.96	0.38	.....	.....	.....	.....	.....	.....	.....	.....	.....	.....	.....	.....	1,750
2,000	.....	.....	.....	.....	8.17	1.23	5.67	0.49	4.17	0.234	3.19	0.123	2.52	0.071	2.04	0.042	1.44	0.020	0.91	0.006	2,000
2,250	.....	.....	.....	.....	.....	.....	6.38	0.63	.....	.....	.....	.....	.....	.....	.....	.....	.....	.....	.....	.....	2,250
2,500	.....	.....	.....	.....	.....	.....	7.09	0.77	5.21	0.362	3.99	0.188	3.15	0.107	.....	.....	.....	.....	.....	.....	2,500
3,000	.....	.....	.....	.....	.....	.....	8.51	1.11	6.25	0.515	4.79	0.267	3.78	0.150	3.06	0.091	2.16	0.047	1.36	0.012	3,000
3,500	.....	.....	.....	.....	.....	.....	.....	.....	7.29	0.697	5.59	0.365	4.41	0.204	.....	.....	.....	.....	.....	.....	3,500
4,000	.....	.....	.....	.....	.....	.....	.....	.....	8.34	0.910	6.38	0.472	5.04	0.263	4.08	0.158	2.88	0.067	1.82	0.022	4,000
4,500	.....	.....	.....	.....	.....	.....	.....	.....	.....	.....	7.18	0.593	5.67	0.333	.....	.....	.....	.....	.....	.....	4,500
5,000	.....	.....	.....	.....	.....	.....	.....	.....	.....	.....	7.98	0.730	6.30	0.408	5.11	0.244	3.60	0.102	2.27	0.035	5,000
6,000	.....	.....	.....	.....	.....	.....	.....	.....	.....	.....	.....	.....	7.56	0.585	6.13	0.348	4.32	0.146	2.72	0.048	6,000
7,000	.....	.....	.....	.....	.....	.....	.....	.....	.....	.....	.....	.....	.....	.....	7.15	0.472	5.04	0.196	3.18	0.065	7,000
8,000	.....	.....	.....	.....	.....	.....	.....	.....	.....	.....	.....	.....	.....	.....	8.17	0.612	5.76	0.255	3.63	0.083	8,000
9,000	.....	.....	.....	.....	.....	.....	.....	.....	.....	.....	.....	.....	.....	.....	.....	.....	6.47	0.323	4.08	0.105	9,000
10,000	.....	.....	.....	.....	.....	.....	.....	.....	.....	.....	.....	.....	.....	.....	.....	.....	7.19	0.398	4.54	0.131	10,000

CONTENTS OF CYLINDERS AND PIPES IN CUBIC FEET AND GALLONS.

Diam.	For one foot in Length.		Diam.	For one foot in Length.		Diam.	For one foot in Length.	
Ins.	Cubic Feet.	Galls. of 231 cubic Inches.	Ins.	Cubic Feet.	Galls. of 231 cubic Inches.	Ins.	Cubic Feet.	Galls. of 231 cubic Inches.
1/4	.0003	.0025	1/4	.0985	.7369	1/2	.6013	4.498
5/16	.0005	.004	1/2	.1104	.8263	3/4	.6303	4.715
3/8	.0008	.0057	3/4	.1231	.9206	11	.66	4.937
7/16	.001	.0078	5	.1364	1.02	1/4	.6903	5.164
1/2	.0014	.0102	1/4	.1503	1.125	1/2	.7213	5.396
9/16	.0017	.0129	1/2	.165	1.234	3/4	.753	5.633
5/8	.0021	.0159	3/4	.1803	1.349	12	.7854	5.875
11/16	.0026	.0193	6	.1963	1.469	1/2	.8522	6.375
3/4	.0031	.0230	1/4	.2131	1.594	13	.9218	6.895
13/16	.0036	.0269	1/2	.2304	1.724	1/2	.994	7.436
7/8	.0042	.0312	3/4	.2485	1.859	14	1.069	7.997
15/16	.0048	.0359	7	.2673	1.999	1/2	1.147	8.578
1	.0055	.0408	1/4	.2867	2.145	15	1.227	9.180
1/4	.0085	.0638	1/2	.3068	2.295	1/2	1.31	9.801
1/2	.0123	.0918	3/4	.3276	2.45	16	1.396	10.44
3/4	.0167	.1249	8	.3491	2.611	1/2	1.485	11.11
2	.0218	.1632	1/4	.3712	2.777	17	1.576	11.79
1/4	.0276	.2066	1/2	.3941	2.948	1/2	1.67	12.49
1/2	.0341	.255	3/4	.4176	3.125	18	1.767	13.22
3/4	.0412	.3085	9	.4418	3.305	1/2	1.867	13.96
3	.0491	.3672	1/4	.4667	3.491	19	1.969	14.73
1/4	.0576	.4309	1/2	.4922	3.682	1/2	2.074	15.51
1/2	.0668	.4998	3/4	.5185	3.879	20	2.182	16.32
3/4	.0767	.5738	10	.5454	4.08	22	2.640	19.75
4	.0873	.6528	1/4	.573	4.286	25	3.409	25.50

To find contents of larger pipe than given above.

Take ½ the size and multiply by 4, or take ¼ the size and multiply by 16, thus; contents of pipe 30 inches diameter = 9.180 (contents of 15 inch pipe) × 4 = 36.72 gallons.

Contents of pipe 50 inches diameter = 8522 (contents of 12½ inch pipe) × 16 = 13.6352 cubic inches.

Cubic inches in a gallon = 231.

Gallons in a cubic foot = 7.4805.

A cubic foot of water = 62⅓ lbs. usually taken at 62½ lbs.

Weight of a gallon of water = 8⅓ lbs.

TABLE OF FLOW OF STEAM THROUGH PIPES.

Pressure by gauge, Lbs. per sq. in.	Diameter of pipe in inches. Length of pipe = 240 times its diameter.								
	¾	1	1½	2	2½	3	4	5	6
	Weight of steam per minute in pounds, with one pound loss of pressure.								
1	1.16	2.07	5.7	10.27	15.45	25.38	46.85	77.3	115.9
10	1.44	2.57	7.1	12.72	19.15	31.45	58.05	95.8	143.6
20	1.70	3.02	8.3	14.94	22.49	36.94	68.20	112.6	168.7
30	1.91	3.40	9.4	16.84	25.35	41.63	76.84	126.9	190.1
40	2.10	3.74	10.3	18.51	27.87	45.77	84.49	139.5	209.0
50	2.27	4.04	11.2	20.01	30.13	49.48	91.34	150.8	226.0
60	2.43	4.32	11.9	21.38	32.19	52.87	97.60	161.1	241.5
70	2.57	4.58	12.6	22.65	34.10	56.00	103.37	170.7	255.8
80	2.71	4.82	13.3	23.82	35.87	58.91	108.74	179.5	269.0
90	2.83	5.04	13.9	24.92	37.52	61.62	113.74	187.8	281.4
100	2.95	5.25	14.5	25.96	39.07	64.18	118.47	195.6	293.1
120	3.16	5.63	15.5	27.85	41.93	68.87	127.12	209.9	314.5
150	3.45	6.14	17.0	30.37	45.72	75.09	138.61	228.8	343.0

Elevation of Localities Above the Level of the Sea.

Locality.	Feet.
Tunnel, C. & O. R. R., Peru	15,645
City of Potosi, Bolivia	13,330
Lake Titicaca, Peru	12,846
City of Cuzco, Peru	11,380
" La Paz, Bolivia	10,883
" Quito, Ecuador	9,543
" Chuquisaca, Bolivia	9,343
" Bogota, Columbia	8,732
" Sherman, Wyoming	8,242
Hospice Gt. St. Bernard, Alps	7,963
City of Arequipa, Peru	7,852
" Mexico, Mexico	7,471
" Pueblo, "	7,200
" Summit, California	7,042
" Valladolid, Mexico	6,395
" Cabul, Afghanistan	6,360
Lake Tahoe, California	6,216
City of Cheyenne, Wyoming	6,041
" Popayan, Colombia	6,000
" Kelat, Beloochistan	6,000
" Truckee, California	5,866
" Cashmere, India	5,000
" Jalapa, Mexico	4,340
" Ogden, Utah	4,340
Great Salt Lake, Utah	4,220
City of Teheran, Persia	4,137

Locality.	Feet.
Pyramid Lake, Nevada	4,000
City of Jerusalem, Syria	2,730
" Madrid, Spain	1,995
" Munich, Bavaria	1,764
Lake Neufchatel, Switzerland	1,437
Gibraltar, Spain	1,400
Lake Lucerne, Switzerland	1,380
" Zurich, "	1,363
" Constance, "	1,250
City of Geneva, "	1,230
" Moscow, Russia	928
Lake Superior, U. S.	627
City of Lima, Peru	600
Lake Michigan, U. S.	587
" Huron, "	574
" Erie, "	555
" Ontario, "	282
City of Paris, France	115
" San Jose, California	114
" London, England	64
" Sacramento, Cal.	56
Depression.	
Caspian Sea, Europe and Asia	83
Lake Gennesaret, Syria	653
Dead Sea, Syria	1,317

*The Surface of the Earth as to inequalities can be illustrated as follows: The equatorial diameter of the earth is about 7,925 miles. The highest mountain of the earth is Mount Everest, which has an altitude of 29,002 feet. An elevation of one-sixteenth of an inch on the surface of a globe, seven and one-half feet in diameter, is in the same proportion.

Table for Proportioning the Diameters of Air Pipes, with Proper Allowance for Friction.

Diameter of Large Pipe.																												
1	1																											
2	5.7	2																										
3	16	2.7	3																									
4	32	5.7	2.0	4																								
5	56	9.8	3.6	1.8	5																							
6	88	16	5.7	2.8	1.6	6																						
7	129	23	8.3	4.1	2.3	1.5	7																					
8	180	32	12	5.7	3.2	2.1	1.4	8																				
9	244	42	16	7.6	4.3	2.8	1.9	1.3	9																			
10	317	56	20	9.9	5.7	3.6	2.4	1.7	1.3	10																		
11	402	71	26	12	7.0	4.5	3.1	2.2	1.7	1.3	11																	
12	501	88	32	16	9.0	5.7	3.8	2.8	2.0	1.6	1.2	12																
13	613	107	39	19	11	6.9	4.7	3.4	2.5	1.9	1.5	1.2	13															
14	737	129	47	23	13	8.3	5.7	4.1	3.0	2.3	1.8	1.5	1.2	14														
15	876	152	56	27	16	9.9	6.7	4.8	3.6	2.8	2.2	1.8	1.4	1.2	15													
16	1026	180	65	32	18	11	7.9	5.7	4.2	3.2	2.6	2.1	1.7	1.4	1.2	16												
17	1197	208	76	37	21	13	9.2	6.6	4.9	3.8	2.9	2.4	2.0	1.6	1.4	1.2	17											
18	1375	239	88	43	24	16	10	7.7	5.7	4.3	3.4	2.8	2.3	1.9	1.6	1.3	1.2	18										
19	1580	275	100	49	28	18	12	8.8	6.5	5.0	3.9	3.2	2.6	2.2	1.8	1.5	1.3	1.2	19									
20	1797	313	114	56	32	20	14	9.9	7.4	5.7	4.5	3.6	2.9	2.5	2.1	1.7	1.5	1.3	1.1	20								
22	2284	398	145	71	41	26	18	13	9.3	7.2	5.7	4.5	3.7	3.1	2.6	2.2	1.9	1.7	1.4	1.3	22							
24	2834	493	180	88	50	32	22	16	12	8.9	7.6	5.7	4.6	3.8	3.2	2.9	2.4	2.1	1.8	1.6	1.2	24						
26	3474	605	219	108	62	39	27	19	14	11	8.6	6.9	5.7	4.7	4.0	3.4	2.9	2.5	2.2	1.9	1.5	1.2	26					
28	4165	725	265	129	74	48	32	23	17	13	10	8.3	6.8	5.7	4.8	4.1	3.5	3.0	2.6	2.3	1.8	1.5	1.2	28				
30	4963	864	315	154	88	56	38	28	20	16	12	9.9	8.0	6.7	5.7	4.7	4.1	3.6	3.0	2.6	2.2	1.7	1.4	1.2	30			
36	7818	1361	497	243	139	88	60	43	32	25	19	16	13	11	8.9	7.6	6.5	5.7	5.0	4.3	3.4	2.7	2.2	1.9	1.6			
47	11488	2000	730	358	205	129	88	63	47	36	29	23	19	16	13	11	9.6	8.5	7.3	6.4	5.0	4.1	3.3	2.8	2.3			
48	15989	2792	1081	492	282	180	123	88	66	50	39	32	26	22	18	16	13	12	10	8.9	7.0	5.7	4.7	3.8	3.2			

Although the combined area of four 8-inch pipes is equal to that of one 16-inch pipe, the four small pipes will not convey as much air as the large one, at the same pressure, on account of the increased friction; it will really require 5.7 8-inch pipes.

To find from table how many pipes of smaller diameter will convey at a given pressure the same amount of air as one of greater diameter, find the diameter of large pipe in first vertical column, and follow along horizontally until reaching the column headed by the diameter of the small pipes, and the required number will be found.

The pressure or density of a blast is usually denoted by the height of a column of mercury or water which it will sustain. At a temperature of 60 degrees, 1 ounce pressure per square inch equals a column of mercury .1273 inches high, or, a column of water 1.729 inches high. Or, 1 pound pressure per square inch equals a column of mercury 2.0376 inches high, or a column of water 27.671 inches high.

Loss of Heat from Steam Pipes.

Table of money loss from 100 feet of naked steam pipe, for one year of 3,000 working hours. The temperature of the air surrounding the pipe is taken at 70 degrees. It is further assumed that 10 pounds of water, "at and from 212 degrees" are evaporated by one pound of coal, and, finally, that the value of coal is $6 per ton of 2,000 pounds.

The outside surface of straight pipe, is that on which the calculations are based.

NOMINAL DIAMETER OF PIPE.	STEAM PRESSURES.					
	50	60	70	80	90	100
1	$13.15	$13.70	$14.20	$14.66	$15.08	$15.47
1¼	16.58	17.29	17.92	18.49	19.02	19.51
1½	18.98	19.78	20.51	21.17	21.77	22.33
2	23.72	24.73	25.63	26.45	27.21	27.91
2½	28.72	29.94	31.03	32.03	32.94	33.79
3	34.97	36.45	37.78	38.99	40.10	41.14
4	44.96	46.86	48.57	50.13	51.56	52.89
5	55.57	57.92	60.04	61.96	63.73	65.38
6	66.27	69.08	71.60	73.89	76.01	77.96

To find the head in feet due to friction, in a pipe running full.

RULE: Multiply the length of the pipe in feet, by the square of the number of gallons per minute, and divide the product by 1,000 times the 5th power of the diameter of the pipe in inches. The quotient, less 10 per cent, is the head in feet necessary to overcome the friction.

Table of 5th Powers.

Diameter	Diameter ^{5}
1.00	1.0
1.25	3.0
1.50	7.6

Diameter.	Diameter ^{5}
1.75	16.4
2.00	32.0
2.50	97.6
3.00	243.0
3.50	525.0
4.00	1,024.0
4.50	1,845.3
5.00	3,125.0
5.50	5,032.8
6.00	7,776.0
7.00	16,807.0
8 00	32,768.0
9.00	59,049.0
10.00	100,000.0
12.00	248,832.0
14.00	525,324.0
16.00	1,048,576.0

EXAMPLE: A pipe 4 inches in diameter and 4,000 feet long, is to deliver 200 gallons per minute, what head of water in feet is equivalent to the friction?

$\frac{4{,}000\times40{,}000}{1{,}000\times1{,}024}$ less 10 per cent $= 156-15=141$ feet.—Ans.

The resistance to the flow of water through pipes, is as the square of the velocity.

Spiral Riveted Steam Pipe.

Diameter.	Gauge.	Approximate Bursting pressure per square inch. Pounds.	Approximate weight per foot. Pounds.
3 in	No. 18	1300	1⅞
4 "	"	1000	2½
5 "	"	800	3
6 "	No. 16	800	4¾
7 "	"	700	5½
8 "	No. 14	800	8½
9 "	"	750	9½
10 "	"	650	10½
11 "	"	600	11½
12 "	"	550	13½
13 "	"	500	14½
14 "	"	470	15½
15 "	"	450	17
16 "	"	400	18¾
18 "	"	370	21
28 "	"	300	23

Bursting Pressures of Spiral Riveted Steam Pipe.

Diameter.	Bursting pressure per square inch.
3 in.	500 to 1300 pounds.
4 "	400 to 1000 "
5 "	350 to 800 "
6 "	300 to 800 "
7 "	250 to 700 "
8 "	225 to 800 "
9 "	200 to 750 "
10 "	175 to 650 "
11 "	150 to 500 "
12 "	140 to 550 "

From 13 to 20-inch bursting pressures range from 500 to 350 pounds to the square inch, according to diameter and gauge.

Spiral Riveted Steam Pipe.

Table of Iron and Rivets required for Punched and Formed Sheets.

Number of square feet of iron required to make 100 lineal feet punched and formed sheets when put together.			Approximate number of rivets 1 in. apart, required for 100 lineal feet of punched and formed sheets.
Diameter.	Width of Lap.	Square Feet.	
3 inch.	1 inch.	90	1600
4 "	1 "	116	1700
5 "	1½ "	150	1800
6 "	1½ "	178	1900
7 "	1½ "	206	2000
8 "	1½ "	234	2200
9 "	2 "	260	2300
10 "	2 "	295	2400
11 "	2 "	323	2500
12 "	2 "	349	2600
13 "	2 "	379	2700
14 "	2 "	405	2800
15 "	2 "	434	2900
16 "	2 "	463	3000
18 "	2 "	517	3200
20 "	2 "	573	3500
22 "	2 "	630	3700
24 "	2 "	683	3900
26 "	2 "	740	4100
28 "	2 "	795	4400
30 "	2 "	850	4600

Green-sand iron castings are 6 per cent. stronger than dry sand, and 30 per cent. stronger than chilled; but when castings are chilled and annealed, a gain of 115 per cent. is attained over green sand castings.

Nominal Weight per 100 Lineal Feet of Spiral Riveted Steam Pipe, Black and Galvanized, in Pounds.

Inside Diameter in Inches.	24 Gauge.		22 Gauge.		20 Gauge.		18 Gauge.		16 Gauge.		14 Gauge.		12 Gauge.		10 Gauge.	
	Black.	Gal.	Black.	Gal.	Black.	Gal.	Black.	Gal.	Black.	Gal.	Black.	Gal.	Black.	Gal.	Black.	Gal.
3	95	135	120	155	140	190	190	230								
4	125	170	155	200	195	240	240	300								
5	160	215	175	255	240	290	300	375	425	500						
6			230	300	285	360	360	450	475	575						
7			260	338	325	400	395	495	560	625						
8			300	390	360	460	460	575	630	760	850	950				
9			340	440	410	520	520	650	720	880	950	1065				
10			370	485	450	570	580	710	800	935	1025	1175				
11			420	530	500	625	630	780	860	1020	1120	1280				
12			490	630	585	745	740	925	1020	1220	1325	1525	1700	1900		
13			520	680	625	795	800	1000	1100	1280	1425	1625	1800	2000	2225	2450
14			570	735	690	875	870	1090	1190	1440	1550	1800	1960	2175	2420	2685
15					745	945	950	1175	1285	1540	1680	1930	2115	2350	2650	2900
16					800	1000	1015	1250	1380	1645	1800	2060	2310	2550	2825	3100
18					900	1120	1130	1400	1575	1830	2000	2300	2590	2800	3150	3450
20					1000	1231	1275	1590	1675	2000	2200	2525	2760	3050	3480	3820
22							1360	1700	1835	2200	2320	2670	3025	3300	3725	4100
24							1480	1850	2000	2400	2520	2900	3200	3500	4025	4400
26							1600	2000	2160	2600	2720	3100	3500	3850	4375	4800
28									2350	2820	2950	3390	3860	4200	4750	5200
30									2520	3000	3170	3600	4150	4500	5100	5600

Nominal Weight of Fittings for Spiral Riveted Steam Pipe.—Elbows, 2½ times weight of one foot of pipe; Tees, 3 times weight of one foot of pipe; Crosses, 4 times weight of one foot of pipe.

Boiler Feed or Pressure Pumps.

SIZES AND CAPACITIES.

Steam Cylinder. Inches.	Water Cylinder. Inches.	Stroke. Inches.	Gallons per Stroke.	Capacity per minute at ordinary speed.	Steam pipe. Inches.	Exhaust pipe. Inches.	Suction pipe. Inches.	Delivery pipe. Inches.	Floor Space Required. Ins.	Horse-power of boiler best adapted for.
2½	1½	3	.023	150 Strokes, 3½ gals.	¼	⅜	½	⅜	17x 5	
3	1¾	3	.031	150 " 4¾ "	¼	⅜	¾	½	18x 5	
3¼	2	4	.05	150 " 7½ "	½	¾	1¼	1	26x 6	25
3½	2¼	4	.07	150 " 10½ "	½	¾	1¼	1	28x 7	40
4	2½	5	.11	150 " 16½ "	½	¾	1¼	1	31x 8	60
5	3¼	7	.25	125 " 31 "	¾	1	2	1½	44x13	90
5½	3¾	7	.35	125 " 42 "	¾	1	2	1½	45x14	130
7	4	7	.39	125 " 49 "	1	1¼	2½	2	45x14	160
7	4½	10	.69	100 " 69 "	1	1¼	3	2½	55x16	200
7½	5	10	.85	100 " 85 "	1	1¼	3	2½	55x16	250
8	5	12	1.02	100 " 102 "	1	1¼	4	4	67x19	300
10	6	12	1.47	100 " 147 "	1¼	1½	4	4	67x19	400
12	7	12	2.00	100 " 200 "	2	2½	5	5	67x20	600
14	8	12	2.61	100 " 261 "	2	2½	5	5	67x20	
16	10	16	5.44	75 " 408 "	2½	3	6	6	80x22	
18	12	24	11.75	50 " 588 "	3½	4	8	6	110x27	
20	14	24	16.00	50 " 800 "	3½	4	10	8	111x29	

BESSEMER STEEL.

This process of making steel consists in melting several tons of pig iron, as free as possible from sulphur and phosphorus, in a cupola, and allowing it to run into a huge vessel called a "converter," which is supported by two trunnions to allow of its being easily tilted. Air is driven through the molten mass, through the bottom of the converter, causing it to bubble and boil, and producing a most intense combustion. The object is to burn out all the carbon in the iron, and purify it of all dirt, etc. The blowing process takes about 20 minutes. When the iron is rid of its carbon, and purified, the blast is shut off, and a certain quantity of "spiegeleisen" and silex is added in a molten state to convert the mass of quiescent molten pig iron in the converter into steel. It requires an expert to determine when the blast is to be shut off. The molten mass (now steel) is poured into molds to form ingots.

"Spiegeleisen" is pig iron rich in carbon and manganese. The ingots are re-heated and then hammered into billets. The billets are re-heated and rolled into rails, etc.

Tank or Light Service Pumps.

These pumps are principally used at railroad water stations, gas and oil works, bleacheries, tanneries, refineries, plantations, distilleries, etc. A variety of valves are used adapted for pumping hot, cold, thick, thin, alkaline or other liquids.

For quarries and clay pits, also for coffer dams, tunnels, foundation pits, ore beds, sewerage and irrigating purposes, these pumps are especially adapted, having large water passages and valve openings.

SIZES AND CAPACITIES.

Steam Cylinder. Inches.	Water Cylinder. Inches.	Stroke. Inches.	Gallons per stroke.	Capacity per minute at ordinary speed.	Steam pipe. Ins.	Exhaust pipe. Inches.	Suction pipe. Inches.	Delivery pipe. Inches.	Floor Space Required. Inches.
3¼	3¼	4	.15	125 Strokes, 18 gals.	½	¾	1½	1¼	28 x10
4	4	5	.27	125 " 33 "	½	¾	2	1½	34 x11
5	4	7	.39	125 " 49 "	¾	1	2½	2	44 x12
5½	5½	7	.72	125 " 90 "	¾	1	3	2½	44 x13½
6	5½	7	.72	125 " 90 "	¾	1	3	2½	44 x13½
6	6	12	1.47	100 " 147 "	¾	1	4	4	66¾x19
6	7	12	2.00	100 " 200 "	¾	1	5	5	66¾x19
7½	7	10	1.66	100 " 166 "	1	1¼	5	5	56½x19
7½	7½	10	1.91	100 " 191 "	1	1¼	5	5	56½x19
8	6	12	1.47	100 " 147 "	1	1¼	4	4	66¾x19
8	7	12	2.00	100 " 200 "	1	1¼	5	5	66¾x19
8	8	12	2.61	100 " 261 "	1	1¼	5	5	66¾x20
8	9	12	3.30	100 " 330 "	1	1¼	6	6	66¾x21½
8	10	12	4.08	100 " 408 "	1	1¼	6	6	66¾x21½
10	10	12	4.08	100 " 408 "	1¼	1½	6	6	66¾x21½
10	10	16	5.44	75 " 408 "	1¼	1½	6	6	78½x21½
10	12	12	5.87	100 " 587 "	1¼	1½	8	6	66¾x23¼
10	12	16	7.83	75 " 587 "	1¼	1½	8	6	78½x23¾
12	10	12	4.08	100 " 408 "	2	2½	6	6	66¾x21½
12	10	16	5.44	75 " 408 "	2	2½	6	6	78½x21½
12	12	12	5.87	100 " 587 "	2	2½	8	6	66¾x23¾
12	12	16	7.83	75 " 587 "	2	2½	8	6	78½x23¾
14	12	12	5.87	100 " 587 "	2	2½	8	6	66¾x23¾
14	12	16	7.83	75 " 587 "	2	2½	8	6	78½x23¾
14	14	16	10.66	75 " 800 "	2	2½	10	8	78½x27
14	14	24	16.00	50 " 800 "	2½	3	10	8	108 x27
14	16	16	14.92	75 " 1020 "	2½	3	12	10	80 x35½
14	16	24	20.88	50 " 1044 "	2½	3	12	10	108 x35½
16	14	16	10.66	75 " 800 "	2½	3	10	8	78½x27
16	14	24	16.00	50 " 800 "	2½	3	10	8	108 x27
16	16	16	14.92	75 " 1020 "	2½	3	12	10	80 x35½
16	16	24	20.88	50 " 1044 "	2½	3	12	10	108 x35½
16	18	24	26.44	50 " 1322 "	2½	3	12	10	108 x38
16	20	24	32.64	50 " 1632 "	2½	3	14	12	108 x40
18	16	24	20.88	50 " 1044 "	3½	4	12	10	110 x35½
18	18	24	26.44	50 " 1322 "	3½	4	12	10	110 x38
18	20	24	32.64	50 " 1632 "	3½	4	14	12	110 x40
18	22	24	39.50	50 " 1975 "	3½	4	14	14	110 x42
20	18	24	26.44	50 " 1322 "	3½	4	12	10	118 x38
20	20	24	32.64	50 " 1622 "	3½	4	14	12	118 x40
20	22	24	39.50	50 " 1975 "	3½	4	14	14	118 x42
20	24	24	47.00	50 " 2350 "	3½	4	16	16	118 x44

A unit of work is the labor requisite to raise one pound through the space of one foot.

DUPLEX STEAM PUMPS.

For Water Pressure Not Exceeding 150 lbs. Speed from 50 to 100 feet per Minute.

Diameter of Steam Cylinders.	Diameter of Water Plungers.	Length of Stroke.	Displacement in Gallons per stroke of one Plunger.	Proper Strokes per minute of one Plunger, varying with kind of work and Pressure.	Gallons delivered per minute by both Plungers, at stated number of Strokes.
3	2	3	.04	100 to 250	8 to 20
4½	2¾	4	.10	100 to 200	20 to 40
5¼	3½	5	.20	100 to 200	40 to 80
6	4	6	.33	100 to 150	70 to 100
7½	4½	6	.42	100 to 150	85 to 125
7½	5	6	.51	100 to 150	100 to 150
7½	4½	10	.69	75 to 125	100 to 170
9	5¼	10	.93	75 to 125	135 to 230
10	6	10	1.22	75 to 125	180 to 300
10	7	10	1.66	75 to 125	245 to 410
12	7	10	1.66	75 to 125	245 to 410
14	7	10	1.66	75 to 125	245 to 410
12	8½	10	2.45	75 to 125	365 to 610
14	8½	10	2.45	75 to 125	365 to 610
16	8½	10	2.45	75 to 125	365 to 610
18½	8½	10	2.45	75 to 125	365 to 610
20	8½	10	2.45	75 to 125	365 to 610
12	10¼	10	3.57	75 to 125	530 to 890
14	10¼	10	3.57	75 to 125	530 to 890
16	10¼	10	3.57	75 to 125	530 to 890
18½	10¼	10	3.57	75 to 125	530 to 890
20	10¼	10	3.57	75 to 125	530 to 890
14	12	10	4.89	75 to 125	730 to 1220
16	12	10	4.89	75 to 125	730 to 1220
18½	12	10	4.89	75 to 125	730 to 1220
20	12	10	4.89	75 to 125	730 to 1220
18½	14	10	6.66	75 to 125	990 to 1660
20	14	10	6.66	75 to 125	990 to 1660
17	10	15	5.10	50 to 100	510 to 1020
20	12	15	7.34	50 to 100	730 to 1460
20	15	15	11.47	50 to 100	1145 to 2290
25	15	15	11.47	50 to 100	1145 to 2290

If $3\frac{1}{7}$ times the difference between the diameter of cylinder and the outside diameter of a cast iron piston ring, be cut out of same, it will go into the cylinder when cold. In the case of brass rings, more should be cut out, as brass expands more than cast iron.

See table of expansion of metals.

Centifugal Pumps.

Diameter of discharge Opening in Inches.	Economical capacity in Gallons per Minute.	Actual capacity in Gallons per Minute.	Horse power required for each foot of lift, Minimum Quantity.
1½	20 to 40	160	.01
1¾	40 to 60	225	.016
2	60 to 80	325	.019
2½	80 to 100	400	.039
3	120 to 180	675	.047
4	200 to 300	1300	.078
5	350 to 500	1900	.14
6	500 to 700	2700	.22
8	900 to 1300	4800	.34
10	1600 to 2200	7500	.64
12	2000 to 3000	10500	.88
15	3000 to 5000	16500	1.20
18	5000 to 7000	22000	1.80
22	7000 to 10000	35000	2.90

Steam Jet Pumps.

Size of Pump.	Suction Pipe.	Discharge Pipe.	Steam Pipe.	Steam Opening.	Capacity Per Minute.
¾ inch.	¾ inch.	½ inch.	⅜ inch.	3-16	8 galls.
1 "	1 "	¾ "	½ "	4-16	15 "
1¼ "	1¼ "	1 "	½ "	5-16	20 "
1½ "	1½ "	1¼ "	¾ "	6-16	30 "
2 "	2 "	1½ "	¾ "	7-16	40 "
2½ "	2½ "	2 "	1 "	8-16	50 "
3 "	3 "	2½ "	1 "	9-16	60 "

Temperature of Different Altitudes as shown by Observations in Balloons.

Altitude.	Gay-Lussac and Biot.	Welsh and Green.	Glasier and Coxwell.		
1,000 ft.	1804. Sept. 16.	1862. Nov. 10.	1862. July 17.	1862. Sept. 5.	1863. April 18.
0	87.4	50.0	50.0	59.5	61.0
1				56.0	59.2
2					57.0
3					51.0
4		45.0	45.0	45.0	48.2
5				41.0	44.2
6		35.8	35.8	36.5	40.1
7				40.0	35.9
8		32.5	32.5		
9					
10	54.4	26.0	26.0	32.0	32.0
11	52.0			31.2	
12	47.5	26.0	26.0		31.0

TABLE SHOWING THE NUMBER OF GALLONS DISCHARGED PER MINUTE

By a Single-Acting Pump of a Given Diameter and Stroke, at 10 Strokes per Minute.

LENGTH OF STROKE IN INCHES.

Diameter of Pump Barrel, in inches.	1	2	3	4	5	6	7	8	9	10	12	14	15	16	18	20	24
1	.034	.068	.102	.136	.170	.204	.238	.272	.306	.340	.408	.476	.510	.544	.612	.680	.816
1¼	.053	.106	.159	.212	.266	.319	.372	.425	.478	.531	.637	.744	.797	.850	.956	1.062	1.275
1½	.076	.153	.229	.306	.382	.459	.535	.612	.688	.765	.918	1.071	1.147	1.224	1.377	1.530	1.836
1¾	.104	.208	.312	.416	.521	.625	.729	.833	.937	1.041	1.249	1.457	1.562	1.666	1.874	2.082	2.499
2	.136	.272	.408	.544	.680	.816	.952	1.088	1.224	1.360	1.632	1.904	2.040	2.176	2.448	2.720	3.264
2½	.212	.425	.637	.850	1.062	1.275	1.487	1.700	1.912	2.125	2.550	2.975	3.187	3.400	3.825	4.250	5.100
3	.306	.612	.918	1.224	1.530	1.836	2.142	2.448	2.754	3.060	3.672	4.284	4.590	4.896	5.508	6.120	7.344
3½	.416	.833	1.249	1.666	2.082	2.499	2.915	3.332	3.748	4.165	4.998	5.831	6.247	6.664	7.497	8.330	9.996
4	.544	1.088	1.632	2.176	2.720	3.264	3.808	4.352	4.896	5.440	6.528	7.616	8.160	8.704	9.792	10.880	13.056
4½	.688	1.377	2.065	2.754	3.442	4.131	4.819	5.508	6.196	6.885	8.262	9.639	10 327	11.016	12.393	13.770	16.524
5	.850	1.700	2.550	3.312	4.250	5.100	5.950	6.800	7.650	8.500	10.200	11.900	12.750	13.600	15.300	17.000	20.400
5½	1.028	2.057	3.085	4.114	5.142	6.171	7.199	8.228	9.256	10.285	12.342	14.399	15.427	16.456	18.513	20.570	24.684
6	1.224	2.448	3.672	4.896	6.120	7 344	8.568	9.792	11.016	12.240	14.688	17.136	18.360	19.584	22.032	24.480	29.376
7	1.666	3.332	4.998	6.664	8.330	9.996	11.662	13.328	14.994	16.660	19.992	23.324	24.990	26.656	29.988	33.320	39.984
8	2.176	4.352	6.528	8.704	10.880	13 056	15.232	17.408	19.584	21.760	26.112	30.464	32.640	34.816	39.168	43.520	52.224
9	2.754	5.508	8.262	11.016	13.770	16.524	19.278	22.032	24.786	27.540	33.048	38.556	41.310	44.064	50.572	55.080	66.096
10	3.400	6.800	10.200	13.600	17.000	20.400	23.800	27.200	30.600	34.000	40.800	47.600	51.000	54.400	61.200	68.000	81.600
12	4.896	9.792	14.688	19.584	24.480	29.376	34.272	39.168	44.064	48.960	58.752	68.544	73.440	78.336	88.128	97.920	107.504
15	7.650	15.300	22.950	30.600	38.250	45.960	53.550	61.200	68.850	76.500	91.800	107.100	114.750	122.400	137.700	153.000	183.600
18	11.016	22.032	33.048	44.064	55.080	66.096	77.112	88.128	99.144	110.160	132.192	154.224	165.240	176.256	198.288	220.320	264.384
20	13.600	27.200	40.800	54.400	68.000	81.600	95.200	108.800	122.400	136.000	163.200	190.400	204.000	217.600	244.800	272.000	326.400
24	19.584	39.168	58.752	78.336	97.920	117.504	137.088	156.672	176.256	195.840	235.208	274.176	293.760	313.344	352.512	391.680	470.016

The quantities given in the Table are in gallons, and are calculated for single-acting pumps at ten strokes per minute. The quantity for any other number of strokes per minute may be found by multiplying the quantity noted in the Table by the ratio of 10 to the given number of strokes. For double-acting pumps, the quantity noted in the Table should be doubled.

Fire Streams.

Table showing the pressure required at pump and at nozzle, with smooth 1 inch, and 1¼-inch nozzles, and 2½-inch rubber hose.

SIZE OF NOZZLE	1 INCH.			
Pressure at nozzle	40	60	80	100
Pressure at pump or hydrant with 100 feet and 2½-inch rubber hose	48	73	97	121
Gallons per minute	155	189	219	245
Distance thrown, horizontal	109	142	168	186
Distance thrown, vertical	79	108	131	148
SIZE OF NOZZLE.	1¼ INCH.			
Pressure at nozzle	40	60	80	100
Pressure at pump or hydrant with 100 feet and 2½-inch rubber hose	61	92	123	154
Gallons per minute	242	297	342	383
Distance thrown, horizontal	118	156	186	207
Distance thrown, vertical	82	115	142	164

To find the Horse-Power of Boiler necessary to run a steam pump.

Data necessary to computation.

Diameter of water cylinder.

Stroke of water piston.

Strokes of water piston per minute.

Gallons of water raised per minute.

Height, vertical, from surface of water to be raised, to water cylinder, in feet. Height, vertical, from water cylinder to point of delivery, in feet.

NOTE: A column of water $2\frac{3}{10}$ feet high, weighs one pound per square inch.

FIRST RULE: Divide the total lift of water in feet (measuring vertically from surface of water in well or pond, to point of delivery) by 2. Allow the $\frac{3}{10}$ for friction. Then multiply this quotient by the area of water piston and this product by speed of piston, in feet per minute. Add 20 per cent for friction and waste of steam, and divide the sum by 33,000. The quotient will be the horse power of boiler required.

SECOND RULE: Multiply the total lift in feet by the weight of water to be lifted per minute. One gallon of water weighs 8.33111 pounds.

Add 25 per cent for friction, and an additional 10 per cent for waste of steam, and divide the sum by 33,000.

EXAMPLE: A steam pump with water cylinder 12 inches diameter, and 12 inches stroke, making 100 strokes per minute is required to lift 587 gallons of water per minute to a height of 80 feet above the pump. Distance from pump to surface of water in well 18 feet.

Solution by first rule.

$\frac{98}{2} = 49 \times 113$ square inches $= 5537 \times 100 = 553700 +$ 20 per cent for friction and steam waste $= 664440 \div 33{,}000 = 20 +$ h. p.

Solution by second rule.

$587 \times 8\frac{1}{2} = 4990 \times 98 = 489020$ foot pounds + 25 per cent for friction = 611275 pounds + 10 per cent for steam waste = 672402 pounds ÷ 33,000 = 20 + h. p.

Pump Notes.

A cubic foot of pure, fresh water, at a temperature of 62 degrees Fahr. weighs 62.321 pounds avoirdupois. A uniform column of water one inch square at the base and one foot high will weigh $\frac{62.321}{144} = .433$ of a pound.

A column of water 33.96 feet in height will weigh $33.96 \times .433 = 14.70$ pounds.

The pressure of the atmosphere at the level of the sea = 14.7 pounds per square inch.

From the foregoing it will be seen that water cannot be raised by the pressure of the atmosphere much over 26 feet, and under the very best conditions not much over 28 feet.

CAST IRON SASH WEIGHTS.

Table showing the length of one pound of cast iron sash weights of different diameters:

Diameter.	Length of 1 lb. in inches.	Length of 1 lb. in inches.	Diameter.	Length of 1 lb. in inches	Length of 1 lb. in inches.
INCHES.	ROUND. IRON.	SQUARE. IRON.	INCHES.	ROUND IRON.	SQUARE IRON
½	19.67	15.38	2⅜	.86	.68
⅝	12.63	9.83	2½	.78	.60
¾	8.69	6.85	2⅝	.70	.55
⅞	6.41	5.02	2¾	.64	.50
1	4.44	3.84	2⅞	.59	.46
1⅛	3.87	3.03	3	.54	.42
1¼	3.13	2.45	3⅛	.50	.39
1⅜	2.58	2.03	3¼	.46	.36
1½	2.17	1.70	3⅜	.42	.33
1⅝	1.85	1.45	3½	.39	.31
1¾	1.59	1.25	3⅝	.37	.29
1⅞	1.39	1.09	3¾	.24	.27
2	1.22	.96	3⅞	.32	.25
2⅛	1.08	.85	4	.30	.24
2¼	.96	.75			

Table of Standard or Regular Tin Plates.

Size and Kind of Plates—Number and Weight of Sheets in a Box, and Wire Gauge Thickness of Every Kind and Size.

Size.	Grade.	Sheets in Box.	Lbs. in Box.	Wire Gauge.
10 by 10	IC	225	78	29
"	IX	225	98	27
"	IXX	225	112	26
"	IXXX	225	124	25
"	IXXXX	225	140	24½
10 by 14	IC	225	108	29
"	IX	225	136	27
"	IXX	225	159	26
"	IXXX	225	178	25
"	IXXXX	225	200	24½
10 by 20	IC	225	156	29
"	IX	225	196	27
11 by 11	IC	225	95	29
"	IX	225	118	27
"	IXX	225	135	26
11 by 15	SDC	200	164	26
"	SDX	200	185	25
"	SDXX	200	206	24½
"	SDXXX	200	226	24
"	SDXXXX	200	248	23
22 by 15	SDC	100	164	26
"	SDX	100	185	25
"	SDXX	100	206	24½
"	SDXXX	100	226	24
"	SDXXXX	100	248	23
12½ by 17	DC	100	96	28
"	DX	100	124	26
"	DXX	100	145	24
"	DXXX	100	166	23
"	DXXXX	100	185	22
15 by 21	DX	100	183	27
"	DXX	100	214	24
"	DXXX	100	245	23
"	DXXXX	100	276	22
25 by 17	DC	50	96	28
"	DX	50	124	26
"	DXX	50	145	24
"	DXXX	50	166	23
"	DXXXX	50	185	22
14 by 20	IC	112	108	29
"	IX	112	136	27
"	IXX	112	157	26
"	IXXX	112	178	25
"	IXXXX	112	200	24½
"	IXXXXXX	112	240	23½
12 by 12	IC	225	108	29
"	IX	225	136	27
"	IXX	225	157	26
"	IXXX	225	178	25

Size.	Grade.	Sheets in Box.	Lbs. in Box.	Wire Gauge.
13 by 13	IC	225	130	29
"	IX	225	164	27
"	IXX	225	190	26
"	IXXX	225	216	25
14 by 14	IC	225	152	29
"	IX	225	192	27
"	IXX	225	221	26
"	IXXX	225	250	25
"	IXXXX	225	279	24½
15 by 15	IX	225	221	27
"	IXX	225	255	26
"	IXXX	225	288	25
"	IXXXX	225	322	24½
16 by 16	IC	225	200	29
"	IX	225	252	27
"	IXX	225	290	26
"	IXXX	225	328	25
"	IXXXX	225	368	24½
17 by 17	IX	112	140	27
"	IXX	112	162	26
"	IXXX	112	184	25
"	IXXXX	112	205	24½
18 by 18	IX	112	158	27
"	IXX	112	182	26
"	IXXX	112	206	25
"	IXXXX	112	231	24½
22 by 22	IXX	56	135	26
"	IXXX	56	.....	25
"	IXXXX	56	.....	24½
24 by 24	IXX	56	157	26
"	IXXX	56	.....	25
"	IXXXX	56	.....	24½

TERNE PLATES.

14 by 20	IC	112	108	29
"	IX	112	136	27
20 by 28	IC	112	216	29
"	IX	112	272	27
20 by 200	IC	.....	172	29
"	IX	.....	216	27

TIN TAGGERS.

10 by 14		450	108	38

BLACK TAGGERS.

10 by 14		256	108	32
"		300	108	34
"		360	108	36
"		450	108	38

WEIGHT OF IRON, COPPER AND BRASS WIRE AND PLATES.

Diameters and Thickness Determined by American Gauge.

No. of Gauge.	Size of Each No.	WEIGHT OF WIRE PER 1,000 LINEAL FEET.				WEIGHT OF PLATES PER SQUARE FOOT.			
		Wrought Iron.	Steel.	Copper.	Brass.	Wrought Iron.	Steel.	Copper.	Brass
	Inch.	Lbs.	Lbs.	Lbs.	Lbs.	Lbs.	Lbs.	Lbs.	Lbs.
0000	.46000	560.74	566.03	640.51	605.18	17.25	17.48	20.838	19.688
000	.40964	444.68	448.88	507.95	479.91	15.3615	15.5663	18.557	17.533
00	.36480	352.66	355.99	402.83	380.67	13.68	13.8624	16.525	25.613
0	.32486	279.67	282.30	319.45	301.82	12.1823	12.3447	14.716	13.904
1	.28930	221.79	223.89	253.34	239.35	10.8488	10.9934	13.105	12.382
2	.25763	175.89	177.55	200.91	189.82	9.6611	9.7899	11.671	11.027
3	.22942	139.48	140.80	159.32	150.52	8.6033	8.7180	10.393	9.8192
4	.20431	110.62	111.66	126.35	119.38	7.6616	7.7638	9.2552	8.7445
5	.18194	87.720	88.548	100.20	94.666	6.8228	6.9137	8.2419	7.787
6	.16202	69.565	70.221	79.462	75.075	6.0758	6.1568	7.3395	6.9345
7	.14428	55.165	55.685	63.013	59.545	5.4105	5.4826	6.5359	6.1752
8	.12849	43.751	44.164	49.976	47.219	4.8184	4.8826	5.8206	5.4994
9	.11443	34.699	35.026	39.636	37.437	4.2911	4.3483	5.1837	4.8976
10	.10189	27.512	27.772	31.426	29.687	3.8209	3.8718	4.6156	4.3609
11	.090742	21.820	22.026	24.924	23.549	3.4028	3.4482	4.1106	3.8838
12	.080808	17.304	17.468	19.766	18.676	3.0303	3.0707	3.6606	3.4586
13	.071961	13.722	13.851	15.674	14.809	2.6985	2.7345	3.2598	3.0799
14	.064084	10.886	10.989	12.435	11.746	2.4032	2.4352	2.9030	2.7428
15	.057068	8.631	8.712	9.859	9.315	2.1401	2.1686	2.5852	2.4425
16	.050820	6.845	6.909	7.819	7.587	1.9058	1.9312	2.3021	2.1751
17	.045257	5.427	5.478	6.199	5.857	1.6971	1.7198	2.0501	1.937
18	.040303	4.304	4.344	4.916	4.645	1.5114	1.5315	1.8257	1.725
19	.035890	3.413	3.445	3.899	3.684	1.3459	1.3638	1.6258	1.5361
20	.031961	2.708	2.734	3.094	2.920	1.1985	1.2145	1.4478	1.3679
21	.028462	2.147	2.167	2.452	2.317	1.0673	1.0816	1.2893	1.2182
22	.025347	1.703	1.719	1.945	1.838	.95051	.96319	1.1482	1.0849
23	.022571	1.350	1.363	1.542	1.457	.84641	.8577	1.0225	.96604
24	.020100	1.071	1.081	1.223	1.155	.75375	.7638	.91053	.86028
25	.017900	0.8491	0.8571	.9699	0.9163	.67125	.6802	.81087	.76612
26	.015940	0.6734	0.6797	.7692	0.7267	.59775	.60572	.72208	.68223
27	.014195	0.5340	0.5391	.6099	0.5763	.53231	.53941	.64303	.60755
28	.012641	0.4235	0.4275	.4837	0.4570	.47404	.48036	.57264	.54103
29	.011257	0.3358	0.3389	.3835	0.3624	.42214	.42777	.50994	.48180
30	.010025	0.2663	0.2688	.3042	0.2874	.37594	.38095	.45413	.42907
31	.008928	0.2113	0.2132	.2413	0.2280	.3348	.33926	.40444	.38212
32	.007950	0.1675	0.1691	.1913	.1808	.29813	.3021	.36014	.34026
33	.007080	0.1328	0.1341	.1517	.1434	.2655	.26904	.32072	.30302
34	.006304	0.1053	0.1063	.1204	1137	.2364	.23955	.28557	.26981
35	.005614	.08366	.08455	.0956	0.9015	.21053	.21333	.25431	.24028
36	.005000	.06625	.06687	.0757	.0715	.1875	.19	.2265	.2140
37	.004453	.05255	.05304	.06203	.0567	.16699	.16921	.20172	.19059
38	.003965	.04166	.04205	.04758	.04496	.14869	.15067	.17961	.1697
39	.003531	.03305	.03336	.03755	.03566	.13241	.13418	.15995	.15113
40	.003144	.02620	.02644	.02992	.02827	.1179	.11947	.14242	.13456

SPLICING LEATHER BELTS.

The splicing of leather belts may be made as strong as the solid leather by dissolving Nelson's opaque gelatine in acetic acid, using just enough of the acid to dissolve the gelatine on a warm place on an oven or boiler; the splices, which should be made quite thin, are then pasted with the cement, brought together and cramped between two pieces of wood. For a series of joints, the belt should be laid out on the floor, each splice separately pasted and rubbed on top with a thin piece of wood, as much cement as possible being squeezed from between the joints. Leave over night until properly set.

Weight of a Square Foot of Cast and Wrought Iron, Copper and Brass.

From one-sixteenth to one inch in thickness.

Thickness. Inches.	Cast Iron. Lbs.	Wrought Iron. Lbs.	Copper. Lbs.	Brass. Lbs.
1/16	2.346	2.517	2.89	2.675
1/8	4.693	5.035	5.781	5.35
3/16	7.039	7.552	8.672	8.025
1/4	9.386	10.07	11.562	10.7
5/16	11.733	12.588	14.453	13.375
3/8	14.079	15.106	17.344	16.05
7/16	16.426	17.623	20.234	18.725
1/2	18.733	20.141	23.125	21.4
9/16	21.119	22.659	26.016	24.075
5/8	23.466	25.176	28.906	26.75
11/16	25.812	27.694	31.797	29.425
3/4	28.159	30.211	34.688	32.1
13/16	30 505	32.729	37.578	34.775
7/8	32.852	35.247	40.469	37.45
15/16	35.199	37.764	43.359	40.125
1	37.545	40.282	46.25	42.8

Approximate Weights of Muntz Metal Plates per Square Foot.

1/4 inch thick	10.76 lbs.	1 1/8 inch thick	48.69 lbs.
5/16 "	13.48 "	1 1/4 "	54.18 "
3/8 "	16.25 "	1 3/8 "	59.55 "
7/16 "	19.00 "	1 1/2 "	65.00 "
1/2 "	21.65 "	1 5/8 "	70.35 "
9/16 "	24.30 "	1 3/4 "	75.86 "
5/8 "	27.12 "	2 "	86.60 "
3/4 "	32.46 "	2 1/4 "	97.36 "
7/8 "	37.85 "	2 1/2 "	108.25 "
1 "	43.30 "	3 "	129.90 "

Table of Piston Speeds.

REVOLUTIONS PER MINUTE.

Length of Stroke in Inches.										Piston Speed in Feet per Minute.
In.	50	75	100	150	200	250	300	350	400	
6	.....	.....	.....	.....	.....	.....	300	350.	400.	
8	.....	.....	.....	.....	.....	.....	400	466.7	533.3	
10	.....	.....	.....	.....	.....	416.7	500	583⅓.	666 7	
12	.....	.....	.....	.....	400.	500.	600	700.	800	
14	.....	.....	.....	.....	466.5	583.3	700	816.7	933.3	
16	.....	.....	.....	400	533.4	666.7	800	933.3	1066.7	
18	.....	.....	300.	450	600.	750.	900	1050.	1200.	
20	166.7	250	333.4	500	666.7	833.3	1000	1166.7	1333 3	
22	183.3	275	366.7	550	733.3	916.7	1100	1233.3	1466.7	
24	200.	300	400.	600	800.	1000.	1200	.....	.....	
30	250.	375	500.	750	1000.	1250.	.....	.....	.....	
36	300.	450	600.	900	.....	.....	.....	.....	.....	
42	350.	525	700.	.....	.....	.....	.....	.....	.....	
48	400.	600	800.	.....	.....	.....	.....	.....	.....	
54	450.	675	.....	.....	.....	.....	.....	.....	.....	
60	500.	.....	.....	.....	.....	.....	.....	.....	.....	
66	550.	.....	.....	.....	.....	.....	.....	.....	.....	
72	600.	.....	.....	.....	.....	.....	.....	.....	.....	

TABLE OF SAFE WORKING STEAM PRESSURE,

For Iron Boilers of Various Sizes, Based Upon a Standard of One-Sixth of Tensile Strength of Plates.

INTERNAL DIAMETER OF SHELL, IN INCHES.	THICKNESS OF IRON.	LONGITUDINAL SEAMS, SINGLE RIVETED.			LONGITUDINAL SEAMS, DOUBLE RIVETED.		
		TENSILE STRENGTH OF IRON.			TENSILE STRENGTH OF IRON.		
		45,000 lbs.	50,000 lbs.	55,000 lbs.	45,000 lbs.	50,000 lbs.	55,000 lbs.
		Pressure. lbs.	Pressure. lbs.	Pressure. lbs.	Pressure. lbs.	Pressure. lbs.	Pressure. lbs.
36	1/4	104	116	127	125	139	152
	5/16	130	145	159	156	174	191
38	1/4	99	110	121	119	132	145
	5/16	123	137	151	148	164	181
40	1/4	94	104	115	113	125	138
	5/16	117	130	143	140	156	172
42	1/4	89	99	109	107	119	131
	5/16	112	124	136	134	149	163
44	1/4	85	95	104	102	114	125
	5/16	107	118	130	128	142	156
46	1/4	82	91	100	98	109	120
	5/16	102	113	125	122	136	150
48	1/4	78	87	96	94	104	115
	5/16	98	109	120	118	131	144
	3/8	118	131	144	142	157	173
50	1/4	75	83	92	90	100	110
	5/16	94	104	115	113	125	138
	3/8	112	125	138	134	150	166
52	1/4	72	80	88	86	96	106
	5/16	90	100	110	108	120	132
	3/8	108	120	132	130	144	158
	5/16	87	96	106	101	112	122
54	3/8	104	116	127	120	134	148
	7/16	121	135	148	140	156	172
	5/16	78	87	95	94	104	114
60	3/8	94	104	115	113	125	138
	7/16	109	121	134	131	145	160
	3/8	85	95	104	102	114	125
66	7/16	99	111	121	120	133	146
	1/2	112	117	138	137	152	167
	7/8	78	87	96	94	104	115
72	7/16	91	102	112	110	122	134
	1/2	102	117	128	125	140	153

To Compute Pressure for a given thickness and diameter, or thickness for a given pressure and diameter:

For Pressure.—Rule: Multiply thickness of plate in inches, by one-sixth of tensile strength of metal, and divide product by radius or half diameter of shell in inches. For double riveted seams add one-fifth to result obtained by the rule.

For Thickness.—Rule: Multiply pressure by radius of shell, and divide product by one-sixth of tensile strength of metal.

To find the distance of thunder: Count the seconds between the flash and report, and multiply by 1,142. The result will give the distance in feet. Sound flies at the rate of 1,142 feet per second.

TABLE OF MEAN EFFECTIVE PRESSURES.*

For Different Initial Pressures† and Points of Cut-off. Non-condensing.‡

INITIAL PRESSURE.	POINTS OF CUT-OFF IN PARTS OF PISTON STROKE.									
	1/10	1/8	15/100	1/6	1/4	3/10	35/100	3/8	4/10	1/2
40	3.36	6.35	9.09	13.85	17.93	21.46	24.54	25.94	27.20	31.63
45	5.01	8.28	11.27	16.46	20.92	24.76	28.13	29.66	31.03	35.87
50	6.66	10.20	13.44	19.07	23.90	28.07	31.71	33.37	34.86	40.10
55	8.31	12.13	15.62	21.68	26.88	31.37	35.30	37.09	38.69	44.34
60	9.96	14.05	17.79	24.29	29.86	34.68	38.89	40.80	42.52	48.57
65	11.62	15.98	19.97	26.90	32.85	37.98	42.48	44.52	46.35	52.81
70	13.27	17.90	22.14	29.51	35.83	41.28	46.06	48.23	50.18	57.04
75	14.92	19.83	24.32	32.12	38.81	44.59	49.65	51.95	54.01	61.28
80	16.57	21.75	26.49	34.73	41.79	47.89	53.24	55.66	57.84	65.51
85	18.22	23.68	28.67	37.34	44.78	51.20	56.82	59.38	61.67	69.75
90	19.87	25.60	30.84	39.95	47.76	54.50	60.41	63.09	65.50	73.98
95	21.52	27.53	33.02	42.56	50.74	57.80	64.00	66.81	69.33	78.22
100	23.17	29 45	35.19	45.17	53.73	61.10	67.58	70.52	73.16	82.45

The above table represents the theoretic pressures obtained under the conditions given, neglecting the items of clearance and compression, which are varying amounts in different engines, clearance having the effect of increasing, and compression of reducing, the mean, effective pressure. In practice, therefore, the mean effective pressure, as figured from the indicator diagram, is something less than the quantities given in the table.

* The mean effective pressure is the *average* pressure in cylinder throughout the stroke.

† The pressure by gauge (or above the atmosphere) in the cylinder at commencement of stroke.

‡ If engine is worked condensing, 10 lbs. may be added to the figures given in table, as that additional amount may reasonably be expected from condenser.

INCLINED PLANES.

In order to enable users to ascertain the size of rope required, we subjoin two tables, by which the strain produced by any load can be easily calculated.

TABLE 1. A body on an inclined plane will be supported by a weight which bears the same proportion to it that the height does to the length of the plane. Thus: Take an angle of 28°; we have here the length and height of the plane in the proportion of 1 to .46947; therefore, the weight that would support, say 2240 pounds, at this angle would be

As 1 : .46947 : : 2240 : 1051.61

This is what we call the "Gravity due to Inclines" in the table. The weight shown has been obtained by multiplying the number of pounds in a ton of 2240 pounds, by the line of the different angles. The use of the figures will be exemplified as below:

Example: The weight of the cars, coal, rope, etc., which is pulled up a slope, whose angle is 26°, amounts to, say 70 cwt., or 7840 pounds. To how much weight is this equivalent lifted vertically, or what is the working load of the rope, independent of friction?

Opposite angle 26°, in column B, we find 981.94; then, as

$$2240 : 981.94 : : 7840 : 3437 \text{ pounds.}$$

Then by referring to the "Table of the Weight and Strength of Ropes," we shall ascertain the size of rope required for the work.

TABLE 2 gives the strain produced on a rope by a load of one ton of 2000 pounds, an allowance of friction being made. An additional allowance for the weight of the rope will have to be made.

Example: For an inclination of 50 feet in 100, corresponding to an angle of 26¼°, a load of 2000 will produce a strain of the rope of 905 pounds, and for a load of 7840 pounds the strain on the rope will be

$$\frac{905 \times 7840}{2000} = 3547$$

NOTE.—These tables have been given for tons of 2240 pounds and 2000 pounds respectively.

Table No. 1.

Number of Degrees.	Vertical Measure, Hypothenuse being A.	Gravity due to Incline, per Ton, in pounds. B.	Number of Degrees.	Vertical Measure, Hypothenuse being A.	Gravity due to Incline, per Ton, in pounds. B.
1	.01745	30.08	22	.37461	839.12
2	.03490	78.18	23	.39073	875.23
3	.05224	117.24	24	.40674	911.09
4	.06976	156.26	25	.42262	946.66
5	.08716	195.24	26	.43837	981.94
6	10453	234.14	27	.45399	1016.93
7	.12187	272.98	28	.46947	1051.61
8	.13917	311.74	29	.48481	1085.97
9	.15643	350.40	30	.5——	1120.00
10	.17305	388.97	31	.57504	1153.68
11	.19081	427.41	32	.52992	1187.02
12	.20791	465.71	33	.54464	1219.99
13	.22495	503.88	34	.55919	1252.58
14	.24192	541.90	35	.57358	1284.81
15	.25822	579.75	36	.58778	1316.62
16	.27564	617.43	37	.60181	1348.05
17	.29237	654.90	38	.61566	1379.07
18	.30902	692.20	39	.62922	1409.67
19	.32557	729.27	40	.64279	1439 84
20	.34202	760.12	41	.65006	1469.57
21	.35837	802.74	....	.....	.....

Table No. 2.

Angle of Elevation. Degrees.	Elevation in 100 feet.	Strain in lbs. on Rope for a load of 2,000 lbs.	Angle of Elevation. Degrees.	Elevation in 100 feet.	Strain in lbs. on Rope for a load of 2,000 lbs.
2⅛	5	112	28 5/6	55	975
5½	10	211	31	60	1040
8¼	15	308	33 1/12	65	1100
11 1/5	20	404	35	70	1156
14 11/12	25	497	37	75	1210
16¾	30	586	38⅔	80	1260
19 1/5	35	673	40½	85	1304
21⅝	40	754	42	90	1347
24¼	45	832	43½	95	1385
26½	50	905	45	100	1419

Factor of safety for inclines, 5; for hoisting in shafts, 7. That is, the working load of the rope should only be one fifth or one-seventh of its breaking strain.

Table of Dimensions for Standard Pulleys.

Diameter of Pulley.	Thickness of Rim.	Thickness of Arm at Rim.	Thickness of Arm at Hub.
6 inches.	5/32	1 5/16 × 5/16	1¼ × ½
8 "	5/32	1 × ¾	1⅜ × ⅝
10 "	3/16	1 × ⅜	1⅜ × ⅝
12 "	3/16	1 1/16 × 7/16	1 7/16 × ⅝
14 "	3/16	1 1/16 × 7/16	1 7/16 × ⅝
15 "	3/16	1 1/16 × 7/16	1 7/16 × ⅝
16 "	3/16	1¼ × 7/16	1½ × 11/16
18 "	¼	1⅜ × 7/16	1⅝ × 11/16
20 "	¼	1⅜ × ½	1¾ × 11/16
22 "	¼	1⅜ × ⅝	2 × ⅞
24 "	¼	1 7/16 × 11/16	2⅛ × 15/16
26 "	¼	1½ × 11/16	2⅛ × 15/16
28 "	5/16	1⅝ × 11/16	2¼ × 1
30 "	5/16	1¾ × ¾	2⅜ × 1
32 "	5/16	2 × ⅞	2⅝ × 1⅛
34 "	⅜	2⅛ × ⅞	2¾ × 1⅛
36 "	⅜	2½ × 15/16	3 × 1¼
38 "	7/16	2⅝ × 15/16	3⅛ × 1¼
40 "	7/16	2¾ × 1	3½ × 1 5/16
42 "	½	3¼ × 1 ⅛	4 × 1⅜
48 "	½	3½ × 1 7/16	4½ × 1 13/16
52 "	9/16	3⅝ × 1 ½	4¾ × 1⅞
60 "	⅝	3¾ × 1 9/16	5¼ × 2

The form of arm, covered by the figures in above table, is elliptic, and dimensions given in third and fourth columns are the longer and shorter diameter of arm.

Speed of Pulleys.

The diameter of the driven pulley being given to find its number of revolutions.

RULE: Multiply the diameter of the driving pulley by its number of revolutions, and divide the product by the diameter of the driven pulley, the quotient will be its number of revolutions.

The diameter and revolutions of the driver being given, to find the diameter of the driven, that shall make any given number of revolutions in the same time.

RULE: Multiply the diameter of the driver by its number of revolutions, and divide the product by the number of revolutions of the driven; the quotient will be its diameter.

To find the diameter of the driver.

RULE: Multiply the diameter of the driven by the number of revolutions which it is required to make, and divide the product by the revolutions of the driver; the quotient will be the size of the driver.

In ordering pulleys observe the following data.

Diameter of pulley.
Face of pulley.
Bore of pulley.
Whether crowning, or straight face.
Whether whole, or split pulley.
Whether for single, or double belt.
Whether keyed, or set-screwed.
Whether cast iron, wrought rim, or wood split pulley.

Hydrostatic Presses.

To find the thickness of metal required for the cylinder of a hydrostatic press to stand any given pressure.

RULE: Multiply the pressure on ram in tons per square inch, by half the diameter of cylinder in inches, and this product by .41 for cast iron; .22 for gun metal; .14 for wrought iron, and .6 for steel.

EXAMPLE: What should be the thickness of walls of cylinder of a hydrostatic press to withstand a pressure of 150 tons on a 9-inch ram? Material of cylinder cast iron.

Area of 9″ ram = 64 sq. in. nearly.

$\frac{150}{64} = 2.34$ tons per sq. in. pressure.

$2.34 \times 4\frac{1}{2} = 10.53 \times .41 = 4.32$ inches thickness of walls. Ans.

To Mix Different Colored Paints.

COLOR.	MIX TOGETHER.
Brown	Venetian red and lamp black.
Buff	White, yellow ochre, red.
Chestnut	Red, black, yellow.
Chocolate	Raw umber, red, black.
Copper	Red, yellow, black.
Cream	Same as buff, with more white.

Color.	Mix Together.
Dove	White, vermillion, blue, yellow.
Fawn	White, yellow, red.
Flesh	White, yellow ochre, vermilion.
Freestone	Red, black, yellow ochre, vermilion.
French Gray	White, prussian blue, lake.
Gray	White lead, black.
Green (dark)	Lampblack, chrome green
Green (pea)	White lead, yellow, red.
Green (bronze)	Chrome green, black, yellow
Gold	White, stone, ochre, red.
Lead	White lead, black.
Lemon	White, chrome yellow.
Limestone	White, yellow ochre, black, red.
Olive	Yellow, blue, black, white.
Orange	Yellow, red.
Peach	White, vermilion.
Pearl	White, black, blue.
Purple	Violet, red, white.
Red	White lead, vermilion, scarlet, lake, venetian red, red. lead or burnt ochre.
Rose	White, madder, lake.
Salmon	White lead, blue, yellow, red.
Sandstone	White, yellow ochre, black, red.
Snuff	Yellow, vandyke brown.
Stone	White lead, spruce ochre.
Straw	White lead, yellow.
Violet	Red, blue, white.

Whatman's Drawing Papers.

SIZES OF SHEETS.

Antiquarian	52x31 inches.
Double Elephant	40x27 "
Atlas	34x26 "
Colombier	34x23 "
Imperial	30x22 "
Elephant	28x23 "
Super-royal	27x19 "
Royal	23x19 "
Medium	22x17 "
Demy	20x15 "

The diameter of boiler tubes in inches should be about ¼ of their length in feet. For instance, a 3″ diameter tube should be 3×48=144″÷12″=12 feet long. And 12 feet÷4=3″=diameter of tube when the feet are changed to inches.

Rails Required for One Mile of Single Track; 2,000 lbs. to the Ton.

WEIGHT OF RAIL PER YARD.	TONS PER MILE.
8 lbs.	14 tons 160 lbs.
12 "	21 " 240 "
16 "	28 " 320 "
20 "	35 " 400 "
25 "	44 "
30 "	52 " 1,600 "
35 "	61 " 1,200 "

Rails Required for One Mile of Single Track; 2,240 lbs. to the Ton.

WEIGHT OF RAIL PER YARD.	TONS PER MILE.	WEIGHT OF RAIL PER YARD.	TONS PER MILE.
8 lbs.	12 tons 1,280 lbs.	45 lbs	70 tons 1,600 lbs.
10 "	15 " 1,600 "	56 "	88 "
12 "	18 " 1,920 "	60 "	94 " 640 "
16 "	25 " 320 "	62 "	97 " 960 "
20 "	31 " 960 "	64 "	100 " 1,280 "
25 "	39 " 640 "	65 "	102 " 320 "
28 "	44 "	68 "	106 " 1,920 "
30 "	47 " 320 "	70 "	110 "
35 "	55 "	72 "	113 " 320 "
40 "	63 " 1,920 "	76 "	119 " 960 "

LOGGING RAILROAD.

Rails and Fastenings Required Per Mile.

TONS RAIL PER MILE (GROSS.) FOR DIFFERENT WEIGHTS PER YARD.		FASTENINGS PER MILE FOR DIFFERENT LENGTHS.								
		Lengths. Rail.	No. Rails.	No Splices.	No. Bolts.	Kegs ¾ Bolts.	No. Spikes.	Kegs $\frac{9}{16}$ Spikes.	4½x1½ in.	3 x ⅜ in.
12 lb.–18.71	35 lb.–55.	18 ft	587	1,174	2,348	12	11,740	40	27	12
16 lb.–25.14	40 lb.–62.86	20 ft	528	1,056	2,112	11	11,616	40	27	12
18 lb.–28.30	45 lb.–70.71	22 ft	480	960	1,980	10	11,520	40	27	12
20 lb.–31.43	50 lb.–78.57	24 ft	440	880	1,760	9	11,440	40	27	12
22 lb.–34.57	56 lb.–88.	26 ft	406	812	1,624	8	11,372	40	27	12
24 lb.–37.71	58 lb.–91.14	28 ft	377	754	1,508	7½	11,314	40	27	12
30 lb.–47.14	60 lb.–94.30	30 ft	352	704	1,408	7	11,254	40	27	12

The standard taper for wrought iron gas, steam and water pipe, is ¾ of an inch to the foot.

TABLE OF MIDDLE ORDINATES FOR BENDING RAILS.

Degree.	Radius.	LENGTHS OF RAILS.											
		30	28	26	24	22	20	18	16	14	12	10	8	6
Deg.	Feet.	Ft.	Ft.	Ft.	Ft.	Ft.	Ft.	Ft.	Ft.	Ft.	Ft.	Ft.	Ft.	Ft.
.5	11480.	.010	.008	.006	.005	.004	.004	.003	.002	.002	.001	.001	.000	.000
1.	5730.	.020	.016	.013	.011	.009	.008	.006	.005	.004	.003	.002	.001	.001
1.5	3820.	.029	.026	.021	.018	.016	.013	.010	.008	.006	.004	.003	.002	.001
2.	2865.	.038	.034	.029	.025	.021	.017	.014	.011	.008	.006	.004	.003	001
2.5	2292.	.049	.043	.037	.031	.027	.022	.018	.014	.010	.007	.005	.003	.002
3.	1910.	.058	.051	.044	.037	.031	.026	.022	.017	.012	.009	.006	.004	002
3.5	1667.	.070	.061	.052	.043	.037	.031	.025	.020	.015	.011	.008	.005	.003
4.	1433.	.079	.069	.060	.050	.042	.035	.029	.023	.018	.013	.009	.006	.003
4.5	1274.	.088	077	.067	.056	.047	.039	.032	.026	.020	.015	.010	.007	.004
5.	1146.	.099	.086	.074	.063	.053	.044	.035	.029	.022	.016	.011	.007	.004
5.5	1042.	.108	.094	.082	.070	.059	.048	.039	.032	.024	.018	.012	.008	.004
6.	955.4	.117	.102	.088	.076	064	.052	.042	.034	.026	.019	.013	.008	.005
6.5	882.	.128	.112	.097	.082	.069	.057	.046	.037	.028	.021	.014	.009	.005
7.	819.	.137	.120	.104	.089	.074	.061	.049	.039	.030	.022	.015	.010	.005
7.5	764.5	.146	.127	.111	.094	.079	.065	.053	.042	.032	.024	.016	.010	.006
8.	716.8	.158	.137	.119	.100	.085	.070	.056	.045	.034	.025	.017	.011	.006
8.5	674.6	.166	.145	.126	.106	.090	.074	.060	.048	.036	.027	.018	.012	.007
9.	637.3	.175	.153	.133	.112	.095	.078	.063	.050	.038	.029	.019	.012	.007
9.5	603.8	.187	.163	.141	.119	.101	.083	.067	.054	.042	.031	.021	.013	.008
10	573.7	.196	.171	.148	.125	.106	.087	.071	.057	.045	.032	.022	.014	.008
11	521.7	.216	.188	.163	.139	.117	.097	.077	.063	.049	.036	.024	.016	.009
12	478.3	.236	.206	.179	.151	.128	.105	.085	.069	.053	.039	.026	.017	.010
13	441.7	.254	.222	.192	.163	.138	.113	.092	.075	.057	.042	.028	.019	.010
14	410.3	.275	.239	.207	.175	.148	.122	.099	.080	.061	.045	.030	.020	.011
15	383.1	.295	.257	.223	.188	.159	.131	.106	.085	.065	.049	.033	.021	.012
16	359.3	.313	.273	.236	.200	.170	.139	.113	.091	.070	.052	.035	.023	.013
17	338.3	.333	.290	.252	.213	.180	.148	.120	.096	.074	.055	.037	.024	.014
18	319.6	.351	.306	.265	.225	.190	.156	.127	.102	.078	.058	.039	.025	.014
19	302.9	.371	.324	.280	.238	.201	.165	.134	.108	.082	.061	.041	.027	.015
20	287.9	.392	.341	.296	.250	.212	.174	.141	.114	.087	.066	.044	.028	.016
21	274.4	.410	.357	.309	.262	.222	.182	.148	.120	.091	.069	.046	.030	.017
22	262.	.430	.375	.325	.275	.233	.191	.155	.126	.096	.072	.048	.031	.118
23	250 8	.450	.390	.338	.287	.243	.199	.162	.131	.100	.075	.050	.033	.019
24	240.5	.469	.408	.354	.299	.253	.208	.169	.137	.104	.078	.052	.034	.019
25	231.	.486	.424	.367	.311	.263	.216	.176	.142	.108	.081	.054	.035	.020
26	222.3	.506	.441	.382	.323	.274	.225	.183	.148	.112	.084	.056	.037	.021
27	214.2	.524	.457	.396	.335	.284	.233	.190	.153	.116	.087	.058	.038	.022
28	206.7	.545	.475	.411	.348	.294	.242	.197	.158	.120	.090	.060	.039	.022
29	199.7	.564	.490	.424	.361	.303	.250	.203	.163	.124	.093	062	.041	.023

Weight of Round Copper and Brass Rods.

COPPER.		BRASS.	
Diameter in Inches.	Weight, per foot in length, in Pounds.	Diameter in Inches.	Weight, per foot in length, in Pounds.
⅜	.424	⅜	.411
½	.755	½	.731
⅝	1.17	⅝	1.13
¾	1.69	¾	1.64
⅞	2 31	⅞	2.24
1	3.02	1	2.93
1⅛	3.82	1⅛	3.70
1¼	4.71	1¼	4.56
1⅜	5.71	1⅜	5.53
1½	6.79	1½	6.57
1⅝	7.94	1⅝	7.69
1¾	9.21	1¾	8.92
1⅞	10.61	1⅞	10.28
2	12.08	2	11.70

Cost of Tin Roofing.

The following table shows the cost per square and per square foot of tin roofing, laid with 14x20 tin, at prices from $4 to $12 per box. A square is 100 square feet.

FLAT SEAM ROOFING—COST WITH 14x20 TIN.

Price of Tin per Box.	Cost per Square of Flat Roof 14x20 Tin.	Cost per sq. Foot.	Price of Tin per Box.	Cost per Square of Flat Roof 14x20 Tin.	Cost per sq. Foot.
$4.25	$2.21	.0221	$8.25	$4.29	.0429
4.50	2.34	.0234	8.50	4.42	.0442
4.75	2.47	.0247	8.75	4.55	.0455
5.00	2.60	.0260	9.00	4.68	.0468
5.25	2.73	.0273	9.25	4.81	.0481
5.50	2.86	.0286	9.50	4.94	.0494
5.75	2.99	.0299	9.75	5.07	.0507
6.00	3.12	.0312	10.00	5.20	.0520
6.25	3.25	.0325	10.25	5.33	.0533
6.50	3.38	.0338	10.50	5.46	.0546
6.75	3.51	.0351	10.75	5.59	.0559
7.00	3.64	.0364	11.00	5.72	.0572
7.25	3.77	.0377	11.25	5.85	.0585
7.50	3.90	.0390	11.50	5.98	.0598
7.75	4.03	0403	11.75	6.11	.0611
8.00	4.16	.0416	12.00	6.24	.0624

STANDING SEAM ROOFING—COST WITH 14x20 TIN.

Price of Tin per Box.	Cost per sq. of Standing Seam Roof with 14x20 Tin.	Cost per sq. Foot.	Price of Tin per Box.	Cost per sq. of Standing Seam Roof with 14x20 Tin.	Cost per sq. Foot.
$4.25	$2.37	.0237	$7.25	$4.03	.0403
4.50	2.51	.0251	7.50	4.17	.0417
4.75	2.65	.0265	7.75	4.31	.0431
5.00	2.79	.0279	8 00	4.45	.0445
5.25	2.93	.0293	8.25	4.59	.0459
5.50	3.06	.0306	8.50	4.73	.0473
5.75	3.20	.0320	8.75	4.87	.0487
6 00	3.34	.0334	9.00	5.01	.0501
6.25	3.48	.0348	9.25	5.15	.0515
6.50	3.62	.0362	9.50	5.29	.0529
6.75	3.76	.0376	9.75	5.43	.0543
7.00	3.90	.0390	10.00	5.57	.0557

Roofing Paint.

Take 7 pounds of Prince's Metallic Paint, dry, and 1 gallon of pure linseed oil (½ boiled and ½ raw). Mix. The above amount will cover 500 square feet of tin roofing.

General Rule for Computation of Slate Roofing.

From the length of the slate take three inches, or as many as the third covers the first; divide the remainder by 2, and multiply the quotient by the width of the slate, and the product will be the number of square inches in a single slate. Divide the number of square inches thus procured by 144, the number of square inches in square foot, and the quotient will be the number of feet and inches required. A square of slate is what will cover 100 feet square when properly laid upon the roof.

TABLE OF SIZES AND NUMBER OF SLATES IN ONE SQUARE.

Size in Inches.	No. of Slate in a Square.	Size in Inches.	No. of Slate in a Square.	Size in Inches.	No. of Slate in a Square.	Size in Inches.	No. of Slate in a Square.
6 x 12	533	9 x 14	291	10 x 18	192	11 x 22	137
7 x 12	457	10 x 14	261	11 x 18	174	12 x 22	126
8 x 12	400	12 x 14	218	12 x 18	160	14 x 22	108
9 x 12	355	8 x 16	277	14 x 18	137	12 x 24	114
10 x 12	320	9 x 16	246	10 x 20	169	14 x 24	98
12 x 12	266	10 x 16	221	11 x 20	154	16 x 24	86
7 x 14	374	12 x 16	184	12 x 20	141	14 x 26	89
8 x 14	327	9 x 18	213	14 x 20	121	16 x 26	78

The weight of a Square of Slate is estimated in a general way (varying according to the thickness of the different makes), at from 600 to 700 pounds per square.

In some engines the initial pressure upon the piston is as low as two-thirds of the boiler pressure, while in improved automatic cut-off engines it is within a pound or two of the boiler pressure.

A hollow shaft is very much stronger for its weight than a solid one.

CAPACITY OF RESERVOIRS IN GALLONS.

NOTE.—The columns headed Length and Width denote the length and width in feet; the columns headed Gallons denote the capacity in U. S. gallons of one foot in depth.

Length and Width	Gallons.	Length and Width.	Gallons.	Length and Width.	Gallons.	Length and Width.	Gallons.
1 x 1	7.481	15 x 7	785.455	23 x 10	1720.519	13 x 13	1264.208
2 x 1	14.961	16 x 7	837.818	24 x 10	1795.325	14 x 13	1361.454
3 x 1	22.442	17 x 7	890.182	25 x 10	1870.130	15 x 13	1458.701
2 x 2	29.922	18 x 7	942.545	26 x 10	1944.935	16 x 13	1555.948
3 x 2	44.883	19 x 7	994.909	27 x 10	2019.740	17 x 13	1653.195
4 x 2	59.844	20 x 7	1047.273	28 x 10	2094.545	18 x 13	1750.442
5 x 2	74.805	21 x 7	1099.636	29 x 10	2169.351	19 x 13	1847.688
6 x 2	89.766	8 x 8	478.753	30 x 10	2244.156	20 x 13	1944.935
3 x 3	67.325	9 x 8	538.597	11 x 11	905.143	21 x 13	2042.182
4 x 3	89.766	10 x 8	598.442	12 x 11	987.429	22 x 13	2139.429
5 x 3	112.208	11 x 8	658.286	13 x 11	1069.714	23 x 13	2236.675
6 x 3	134.649	12 x 8	718.130	14 x 11	1152.000	24 x 13	2333.922
7 x 3	157.091	13 x 8	777.974	15 x 11	1234.286	25 x 13	2431.169
8 x 3	179.532	14 x 8	837.818	16 x 11	1316.571	26 x 13	2528.416
9 x 3	201.974	15 x 8	897.662	17 x 11	1398.857	27 x 13	2625.662
4 x 4	119.688	16 x 8	957.507	18 x 11	1481.143	28 x 13	2722.909
5 x 4	149.610	17 x 8	1017.351	19 x 11	1563.429	29 x 13	2820.156
6 x 4	179.532	18 x 8	1077.195	20 x 11	1645.714	30 x 13	2917.403
7 x 4	209.455	19 x 8	1137.039	21 x 11	1728.000	31 x 13	3014.649
8 x 4	239.377	20 x 8	1196.883	22 x 11	1810.286	32 x 13	3111.896
9 x 4	269.299	21 x 8	1256.727	23 x 11	1892.571	33 x 13	3209.143
10 x 4	299.221	22 x 8	1316.571	24 x 11	1974.857	34 x 13	3306.390
11 x 4	329.143	23 x 8	1376.416	25 x 11	2057.143	35 x 13	3403.636
12 x 4	359.065	24 x 8	1436.260	26 x 11	2139.428	36 x 13	3500.883
5 x 5	187.013	9 x 9	605.922	27 x 11	2221.714	37 x 13	3598.130
6 x 5	224.416	10 x 9	673.247	28 x 11	2304.000	38 x 13	3695.377
7 x 5	261.818	11 x 9	740.571	29 x 11	2386.286	39 x 13	3792.623
8 x 5	299.221	12 x 9	807.896	30 x 11	2468.571	14 x 14	1466.182
9 x 5	336.623	13 x 9	875.221	31 x 11	2550.857	15 x 14	1570.909
10 x 5	374.026	14 x 9	942.545	32 x 11	2633.143	16 x 14	1675.636
11 x 5	411.429	15 x 9	1009.870	33 x 11	2715.429	17 x 14	1780.363
12 x 5	448.831	16 x 9	1077.195	12 x 12	1077.195	18 x 14	1885.091
13 x 5	486.234	17 x 9	1144.519	13 x 12	1166.961	19 x 14	1989.818
14 x 5	523.636	18 x 9	1211.844	14 x 12	1256.727	20 x 14	2094.545
15 x 5	561.039	19 x 9	1279.169	15 x 12	1346.493	21 x 14	2199.263
6 x 6	269.299	20 x 9	1346.493	16 x 12	1436.260	22 x 14	2304.000
7 x 6	314.182	21 x 9	1413.818	17 x 12	1526.026	23 x 14	2408.727
8 x 6	359.065	22 x 9	1481.143	18 x 12	1615.792	24 x 14	2513.454
9 x 6	403.948	23 x 9	1548.467	19 x 12	1705.558	25 x 14	2618.182
10 x 6	448.831	24 x 9	1615.792	20 x 12	1795.325	26 x 14	2722.909
11 x 6	493.714	25 x 9	1683.117	21 x 12	1885.091	27 x 14	2827.636
12 x 6	538.597	26 x 9	1750.442	22 x 12	1974.857	28 x 14	2932.364
13 x 6	583.480	27 x 9	1817.766	23 x 12	2064.623	29 x 14	3037.091
14 x 6	628.364	10 x 10	748.052	24 x 12	2154.390	30 x 14	3141.818
15 x 6	673.247	11 x 10	822.857	25 x 12	2244.156	31 x 14	3246.545
16 x 6	718.130	12 x 10	897.662	26 x 12	2333.922	32 x 14	3351.273
17 x 6	763.013	13 x 10	972.467	27 x 12	2423.688	33 x 14	3456.000
18 x 6	807.896	14 x 10	1047.273	28 x 12	2513.455	34 x 14	3560.727
7 x 7	366.545	15 x 10	1122.078	29 x 12	2603.221	35 x 14	3665.454
8 x 7	418.909	16 x 10	1196.883	30 x 12	2692.987	36 x 14	3770.182
9 x 7	471.273	17 x 10	1271.688	31 x 12	2782.753	37 x 14	3874.909
10 x 7	523.636	18 x 10	1346.493	32 x 12	2872.520	38 x 14	3979.636
11 x 7	576.000	19 x 10	1421.299	33 x 12	2962.286	39 x 14	4084.364
12 x 7	628.364	20 x 10	1496.104	34 x 12	3052.052	40 x 14	4189.091
13 x 7	680.727	21 x 10	1570.909	35 x 12	3141.818	41 x 14	4293.818
14 x 7	733.091	22 x 10	1645.714	36 x 12	3231.585	42 x 14	4398.545

The diameter of a circular sheet multiplied by .7071 will give the side of the largest square that can be cut from it.

Capacity of Reservoirs in Gallons.—*Continued.*

Length and Width	Gallons.	Length and Width.	Gallons.	Length and Width.	Gallons.	Length and Width.	Gallons.
15 x 15	1683.117	28 x 17	3560.727	33 x 20	4937.143	52 x 28	10891.636
16 x 15	1795.325	29 x 17	3687.896	34 x 20	5086.753	54 x 28	11310.545
17 x 15	1907.532	30 x 17	3815.065	35 x 20	5236.364	56 x 28	11729.454
18 x 15	2019.740	31 x 17	3942.234	36 x 20	5385.974	30 x 30	6732.467
19 x 15	2131.948	32 x 17	4069.403	37 x 20	5535.584	32 x 30	7181.299
20 x 15	2244.156	33 x 17	4196.571	38 x 20	5685.195	34 x 30	7630.130
21 x 15	2356.364	34 x 17	4323.740	39 x 20	5834.805	36 x 30	8078.961
22 x 15	2468.571	18 x 18	2423.688	40 x 20	5984.416	38 x 30	8527.792
23 x 15	2580.779	19 x 18	2558 338	22 x 22	3620.571	40 x 30	8976.623
24 x 15	2692.987	20 x 18	2692.987	24 x 22	3949.714	42 x 30	9425.454
25 x 15	2805.195	21 x 18	2827.636	26 x 22	4278.857	44 x 30	9874.286
26 x 15	2917.403	22 x 18	2962.286	28 x 22	4608.000	46 x 30	10323.117
27 x 15	3029.610	23 x 18	3096.935	30 x 22	4937.143	48 x 30	10771.948
28 x 15	3141.818	24 x 18	3231.584	32 x 22	5266.286	50 x 30	11220.779
29 x 15	3254.026	25 x 18	3366.234	34 x 22	5595.429	52 x 30	11669.610
30 x 15	3366.234	26 x 18	3500.883	36 x 22	5924.571	54 x 30	12118.442
31 x 15	3478.442	27 x 18	3635.532	38 x 22	6253.714	56 x 30	12567.273
32 x 15	3590.649	28 x 18	3770.182	40 x 22	6582.857	58 x 30	13016.104
33 x 15	3702.857	29 x 18	3904.831	42 x 22	6912.000	60 x 30	13464.935
34 x 15	3815.065	30 x 18	4039.480	44 x 22	7241.143	32 x 32	7660.052
35 x 15	3927.273	31 x 18	4174.130	24 x 24	4308.779	34 x 32	8138.805
36 x 15	4039.480	32 x 18	4308.779	26 x 24	4667.844	36 x 32	8617.558
37 x 15	4151.688	33 x 18	4443.429	28 x 24	5026.909	38 x 32	9096.312
38 x 15	4263.896	34 x 18	4578.078	30 x 24	5385.974	40 x 32	9575.065
39 x 15	4376.104	35 x 18	4712.727	32 x 24	5745.039	42 x 32	10053.818
40 x 15	4488.312	36 x 18	4847.377	34 x 24	6104.104	44 x 32	10532.571
41 x 15	4600.519	19 x 19	2700.467	36 x 24	6463.169	46 x 32	11011.325
42 x 15	4712.727	20 x 19	2842.597	38 x 24	6822.234	48 x 32	11490.078
43 x 15	4824.935	21 x 19	2984.727	40 x 24	7181.299	50 x 32	11968.831
44 x 15	4937.143	22 x 19	3126.857	42 x 24	7540.364	52 x 32	12447.584
45 x 15	5049.351	23 x 19	3268.987	44 x 24	7899.429	54 x 32	12926.338
16 x 16	1915.013	24 x 19	3411.117	46 x 24	8258.493	56 x 32	13405.091
17 x 16	2034.701	25 x 19	3553.247	48 x 24	8617.558	58 x 32	13883.844
18 x 16	2154.390	26 x 19	3695.377	26 x 26	5056.831	60 x 32	14362.597
19 x 16	2274.078	27 x 19	3837.506	28 x 26	5445.818	62 x 32	14841.351
20 x 16	2393.766	28 x 19	3979.636	30 x 26	5834.805	64 x 32	15320.104
21 x 16	2513.454	29 x 19	4121.766	32 x 26	6223.792	34 x 34	8647.480
22 x 16	2633.143	30 x 19	4263.896	34 x 26	6612.779	36 x 34	9156.156
23 x 16	2752.831	31 x 19	4406.026	36 x 26	7001.766	38 x 34	9664.831
24 x 16	2872.519	32 x 19	4548.156	38 x 26	7390.753	40 x 34	10173.506
25 x 16	2992.208	33 x 19	4690.286	40 x 26	7779.740	42 x 34	10682.182
26 x 16	3111.896	34 x 19	4832.416	42 x 26	8168.727	44 x 34	11190.857
27 x 16	3231.584	35 x 19	4974.545	44 x 26	8557.714	46 x 34	11699.532
28 x 16	3351.273	36 x 19	5116.675	46 x 26	8946.701	48 x 34	12208.208
29 x 16	3470.961	37 x 19	5258.805	48 x 26	9335.688	50 x 34	12716.883
30 x 16	3590.649	38 x 19	5400.935	50 x 26	9724.675	52 x 34	13225.558
31 x 16	3710.338	20 x 20	2992.208	52 x 26	10113.662	54 x 34	13734.234
32 x 16	3830.026	21 x 20	3141.818	28 x 28	5864.727	56 x 34	14242.909
17 x 17	2161.870	22 x 20	3291.429	30 x 28	6283.636	58 x 34	14751.584
18 x 17	2289.039	23 x 20	3441.039	32 x 28	6702.545	60 x 34	15260.260
19 x 17	2416.208	24 x 20	3590.649	34 x 28	7121.454	62 x 34	15768.935
20 x 17	2543.377	25 x 20	3740.260	36 x 28	7540.364	64 x 34	16277.610
21 x 17	2670.545	26 x 20	3889.870	38 x 28	7959.273	66 x 34	16786.286
22 x 17	2797.714	27 x 20	4039.480	40 x 28	8378.182	68 x 34	17294.961
23 x 17	2924.883	28 x 20	4189.091	42 x 28	8797.091	36 x 36	9694.753
24 x 17	3052.052	29 x 20	4338.701	44 x 28	9216.000	38 x 36	10233.351
25 x 17	3179.221	30 x 20	4488.312	46 x 28	9634.909	40 x 36	10771.948
26 x 17	3306.390	31 x 20	4637.922	48 x 28	10053.818	42 x 36	11310.545
27 x 17	3433.558	32 x 20	4787.532	50 x 28	10472.727	44 x 36	11849.143

The United States inspection laws allow 20 per cent more pressure to be carried on boilers with double-riveted longitudinal seams, than on single-riveted boilers.

ROADWAYS.

Table of Acres Required per Mile, and per 100 Feet, for Different Widths.

Width, Feet.	Acres per Mile.	Acres per 100 feet.	Width, Feet.	Acres per Mile.	Acres per 100 feet.	Width, Feet.	Acres per Mile.	Acres per 100 feet.	Width, Feet.	Acres per Mile.	Acres per 100 feet.
1	.121	.002	26	3.15	.060	52	6.30	.119	78	9.45	.179
2	.242	.005	27	3.27	.062	53	6.42	.122	79	9.58	.181
3	.364	.007	28	3.39	.064	54	6.55	.124	80	9.70	.184
4	.485	.009	29	3.52	.067	55	6.67	.126	81	9.82	.186
5	.606	.011	30	3.64	.069	56	6.79	.129	82	9.94	.188
6	.727	.014	31	3.76	.071	57	6.91	.131	½	10.0	.189
7	.848	.016	32	3.88	.073	¾	7.00	.133	83	10.1	.190
8	.970	.018	33	4.00	.076	58	7.03	.133	84	10.2	.193
¼	1.00	.019	34	4.12	.078	59	7.15	.135	85	10.3	.195
9	1.09	.021	35	4.24	.080	60	7.27	.138	86	10.4	.197
10	1.21	.023	36	4.36	.083	61	7.39	.140	87	10.5	.200
11	1.33	.025	37	4.48	.085	62	7.52	.142	88	10.7	.202
12	1.46	.028	38	4.61	.087	63	7.64	.145	89	10.8	.204
13	1.58	.030	39	4.73	.090	64	7.76	.147	90	10.9	.207
14	1.70	.032	40	4.85	.092	65	7.88	.149	¾	11.0	.209
15	1.82	.034	41	4.97	.094	66	8.00	.151	91	11.0	.209
16	1.94	.037	¼	5.00	.094	67	8.12	.154	92	11.2	.211
½	2.00	.038	42	5.09	.096	68	8.24	.156	93	11.3	.213
17	2.06	.039	43	5.21	.099	69	8.36	.158	94	11.4	.216
18	2.18	.041	44	5.33	.101	70	8.48	.161	95	11.5	.218
19	2.30	.044	45	5.45	.103	71	8.61	.163	96	11.6	.220
20	2.42	.046	46	5.58	.106	72	8.73	.165	97	11.8	.223
21	2.55	.048	47	5.70	.108	73	8.85	.168	98	11.9	.225
22	2.67	.051	48	5.82	.110	74	8.97	.170	99	12.0	.227
23	2.79	.053	49	5.94	.112	¼	9.00	.170	100	12.1	.230
24	2.91	.055	½	6.00	.114	75	9.09	.172			
¾	3.00	.057	50	6.06	.115	76	9.21	.174			
25	3.03	.057	51	6.18	.117	77	9.33	.177			

MANILLA ROPE.

Diam. Inches.	Circ. Inches.	Weight per foot lbs.	Breaking load.		Diam. Inches.	Circ. Inches.	Weight per foot lbs.	Breaking load.	
			Tons.	lbs.				Tons.	lbs.
.239	¾	.019	.25	560	1.91	6	1.19	11.4	25536
.318	1	.033	.35	784	2.07	6½	1.39	13.0	29120
.477	1½	.074	.70	1568	2.23	7	1.62	14.6	32704
.636	2	.132	1.21	2733	2.39	7½	1.86	16.2	36288
.795	2½	.206	1.91	4278	2.55	8	2.11	17.8	39872
.955	3	.297	2.73	6115	2.86	9	2.67	21.0	47040
1.11	3½	.404	3.81	8534	3.18	10	3.30	24.2	54208
1.27	4	.528	5.16	11558	3.50	11	3.99	27.4	61376
1.43	4½	.668	6.60	14784	3.82	12	4.75	30.6	68544
1.59	5	.825	8.20	18368	4.14	13	5.58	33.8	75712
1.75	5½	.998	9.80	21952	4.45	14	6.47	37.0	82880

The strength of Manilla ropes, like that of bar iron, is very variable; and so with hemp ones. The above table supposes an average quality. Ropes of good *Italian* hemp are considerably stronger than Manilla; but their cost excludes them from general use. The tarring of ropes is said to lessen their strength; and when exposed to the weather, their durability also. We believe that the use of it in standing rigging is partly to diminish contraction and expansion by alternate wet and dry weather.

The strength of pieces from the same coil may vary 25 per cent.

A few months of exposed work weakens ropes 20 to 50 per cent.

Transmission and Standing Rope.

WITH SEVEN WIRES TO THE STRAND.

IRON.

Diameter.	Circumference.	Weight per Foot in Lbs. of Rope with Hemp Cen.	Breaking Strain in Tons of 2,000 Lbs.	Proper Working Load in Tons of 2,000 Lbs.	Circumference of Hemp Rope of Equal Strength.
1½	4⅝	3.37	36.	9	10¾
1⅜	4¼	2.77	30.	7½	10
1¼	3¾	2.28	25.	6¼	9¼
1⅛	3⅜	1.82	20.	5	8
1	3	1.50	16.	4	7
⅞	2⅝	1.12	12.3	3	6¼
¾	2⅜	0.88	8.8	2¼	5¼
11/16	2⅛	0.70	7.6	2	5
⅝	1⅞	0.57	5.8	1½	4¾
9/16	1⅝	0.41	4.1	1	4
½	1⅜	0.31	2.83	¾	3¼
7/16	1¼	0.23	2.13	½	2¾
⅜	1⅛	0.19	1.65	.....	2½
5/16	1	0.16	1.38	.....	2¼
9/32	⅞	0.125	1.03	.....	2

CAST STEEL.

1½	4⅝	3.37	62	13	15
1⅜	4¼	2.77	52	10	13
1¼	3¾	2.28	44	9	12
1⅛	3⅜	1.82	36	7½	10¾
1	3	1.50	30	6	10
⅞	2⅝	1.12	22	4½	8½
¾	2⅜	0.88	17	3½	7¼
11/16	2⅛	0.70	14	3	6½
⅝	1⅞	0.57	11	2¼	5½
9/16	1⅝	0.41	8	1¾	5
½	1⅜	0.31	6	1¼	4¾
⅜	1⅛	0.19	4	1	3¾
5/16	1	0.16	3	¾	3¼

Ropes with 19 wires to the strand are generally used for hoisting and running rope.

Ropes with 12 wires and seven wires to the strand are stiffer, and better adapted for standing rope, guys and rigging.

The cube of the diameter of a cast iron ball multiplied by .1377 will give its weight very nearly.

Standard Hoisting Rope.

WITH 19 WIRES TO THE STRAND.

IRON.

Diameter.	Circumference in Inches.	Weight per Foot in Pounds of Rope with Hemp Cen.	Breaking Strain in Tons of 2,000 Lbs.	Proper Working Load in Tons of 2,000 Lbs.	Circumference of Hemp Rope of equal Strength.	Minimum Size of Drum or Sheave in Feet.
2¼	6¾	8.00	74	15	15½	8
2	6	6.30	65	13	14½	7
1¾	5½	5.25	54	11	13	6½
1⅝	5	4.10	44	9	12	5
1½	4¾	3.65	39	8	11½	4¾
1⅜	4⅜	3.00	33	6½	10¼	4½
1¼	4	2.50	27	5½	9½	4
1⅛	3½	2.00	20	4	8	3½
1	3⅛	1.58	16	3	7	3
⅞	2¾	1.20	11.50	2½	6	2¾
¾	2¼	0.88	8 64	1¾	5	2½
⅝	2	0.60	5.13	1¼	4½	2
9/16	1⅝	0.44	4.27	¾	4	1¾
½	1½	0.35	3.48	⅔	3½	1½
⅜	1¼	0.26	2.50	¼	3	1

CAST STEEL.

2¼	6¾	8.00	155	31	.....	9
2	6	6.30	125	25	.. ...	8
1¾	5½	5.25	106	21	15¾	7½
1⅝	5	4.10	86	17	14½	6
1½	4¾	3.65	77	15	13½	5½
1⅜	4⅜	3.00	63	12	12¼	5¼
1¼	4	2.50	52	10	11½	5
1⅛	3½	2.00	42	8	10	4½
1	3⅛	1.58	33	6	9¼	4
⅞	2¾	1.20	25	5	8	3¾
¾	2¼	0.88	18	3½	6½	3½
⅝	2	0.60	14	2½	5¼	3
9/16	1⅝	0.44	9	1½	4¾	2¾
½	1½	0.35	7½	1	4½	2

NOTE: In no case should galvanized wire rope be used for running rope. The weight of wire center ropes is 10 per cent. more than that of ropes with hemp centers.

For safe working load, allow one-fifth to one-seventh of the ultimate strength, according to speed.

When substituting wire rope for hemp rope, allow for the former the same weight per foot which experience has approved for the latter.

The greater the diameter of sheaves, pulleys or drums, the longer wire ropes will last.

It is better to increase the load than the speed of wire ropes.

Wire rope must not be coiled or uncoiled like hemp rope.

Galvanized Iron Wire Rope.

FOR SHIP'S RIGGING AND GUYS FOR DERRICKS.

CHARCOAL ROPE.

Circumference in Inches.	Weight per Fathom in Pounds.	Circumference of Hemp Rope of Equal Strength.	Breaking Strain in Tons of 2,000 Pounds.
5½	26½	11	43
5¼	24½	10½	40
5	22	10	35
4¾	21	9½	33
4½	19	9	30
4¼	16½	8½	26
4	14¼	8	23
3¾	12¾	7½	20
3½	10¾	7	16
3¼	9½	6½	14
3	8	6	12
2¾	6¾	5½	10
2½	5½	5	9
2¼	4½	4½	8
2	3½	4	7
1¾	2½	3½	5
1½	2	3	3½
1¼	1¾	2½	2½
1	⅞	2	2
⅞	½	1½	1

Galvanized Steel Cables for Suspension Bridges.

Diameter in Inches.	Ultimate Strength in Tons of 2,000 Pounds.	Weight per Foot, Pounds.
2⅝	220	13
2½	200	11.3
2⅜	180	10
2¼	155	8.64
2	110	6.5
1⅞	100	5.8
1¾	95	5.6
1⅝	75	4.35
1½	65	3.7

Air expands $\frac{1}{491}$ part of its bulk for every degree of heat added. The temperature of air compressed from dry atmospheric condition to 130 lbs. per square inch would be about 700 degrees.

The most common taper for a lathe center is 60 degrees.

TABLE OF TRANSMISSION OF POWER BY WIRE ROPES.

Diameter of Wheel in Feet.	Number of Revolutions.	Trade No. of Rope.	Diameter of Rope.	Horse power.	Diameter of Wheel in Feet.	Number of Revolutions.	Trade No. of Rope.	Diameter of Rope.	Horse power.
3	80	23	3/8	3	9	100	20	9/16 5/8	58
3	100	23	3/8	3½			19		60
3	120	23	3/8	4	9	120	20	9/16 5/8	69
3	140	23	3/8	4½			19		73
4	80	23	3/8	4	9	140	20	9/16 5/8	82
4	100	23	3/8	5			19		84
4	120	23	3/8	6	10	80	19	5/8 11/16	64
4	140	23	3/8	7			18		68
5	80	22	7/16	9	10	100	19	5/8 11/16	80
5	100	22	7/16	11			18		85
5	120	22	7/16	13	10	120	19	5/8 11/16	96
5	140	22	7/16	15			18		102
6	80	21	½	14	10	140	19	5/8 11/16	112
6	100	21	½	17			18		119
6	120	21	½	20	12	80	18	11/16 3/4	93
6	140	21	½	23			17		99
7	80	20	9/16	20	12	100	18	11/16 3/4	116
7	100	20	9/16	25			17		124
7	120	20	9/16	30	12	120	18	11/16 3/4	140
7	140	20	9/16	35			17		149
8	80	19	5/8	26	12	140	16	7/8	173
8	100	19	5/8	32	14	80	8	1 1⅛	141
8	120	19	5/8	39			7		148
8	140	19	5/8	45	14	100	8	1 1⅛	176
9	80	20	9/16 5/8	47			7		185
		19		48					

The above table gives the power produced by Patent Rubber-lined Wheels and Wire Belt Ropes, at various speeds.

Horse powers given in this table are calculated with a liberal margin for any temporary increase of work.

Equivalent Belt.

It is often required to convey the entire power of a certain shaft which is driven by a belt of a given size. In such a case a simple rule agreeing with the average result of practice is, that 70 square feet of belt surface are equal to one horse power.

Take, for example, a belt one foot wide, running at the rate of 1,400 feet per minute; then the

$$\text{Horse power} = \frac{1400' + 1'}{70'} = 20;$$

and by referring to the table we find the diameter of the wheel correspond ing to this horse power, and making the same number of revolutions that the belt pulley does.

IRON RIVETS.

Weight per 100.

Length under Head.	DIAMETERS.						
	¼	⅜	½	⅝	¾	⅞	1
1	1.895	4.848	9.66	16.79	26.49	39.3	55.2
⅛	2.067	5.235	10.34	17.86	27.99	41.4	57.9
¼	2.238	5.616	11.04	18.96	29.61	43.5	60.7
⅜	2.410	6.003	11.73	20.03	31.13	45.6	63.4
½	2.582	6.402	12.43	21.04	32.74	47.8	66.2
⅝	2.754	6.789	13.12	22.11	34.25	49.9	68.9
¾	2 926	7.179	13.81	23.31	35.86	52.0	71.7
⅞	3.098	7.566	14.50	24.28	37.37	54.1	74.4
2	3.269	7.956	15.19	25.48	38.99	56.3	77.2
⅛	3.441	8.343	15.88	26.56	40.40	58.4	79.9
¼	3.613	8.733	16.57	27.65	42.11	60.5	82.7
⅜	3.785	9.120	17.26	28.73	43.67	62.6	85.4
½	3.957	9.511	17.95	29.82	45.24	64.8	88.2
⅝	4.129	9.898	18.64	30.90	46.80	66.9	90.9
¾	4.301	10.29	19.33	31.99	48.36	69.0	93.7
⅞	4.473	10.67	20.02	33.08	49.92	71.1	96.4
3	4.644	11.06	20.71	34.18	51.49	73.3	99 2
⅛	4.816	11.44	21.40	35.27	53.05	75.4	101.9
¼	4.988	11.84	22.09	36.35	54.61	77.5	104.7
⅜	5.160	12.23	22.78	37.44	56.17	79.6	107.4
½	5.332	12.62	23.48	38.52	57.74	81.8	110.2
⅝	5.504	13.01	24.17	39.60	59.30	83.9	112.9
¾	5.676	13.39	24.86	40.69	60.86	86.0	116.7
⅞	5.848	13.78	25.55	41.78	62.42	88.1	119.4
4	6.019	14.17	26.24	42.87	63.99	90.3	121.2
⅛	6.191	14.56	26.93	43.94	65.55	92.4	123.9
¼	6.363	14.95	27.62	45.01	67.11	94.5	126.6
100 Heads.	.519	1.74	4.14	8.10	13.99	22.27	33.15

Length of Rivets required to make one Head = 1½ diameters of Round Bar.

Lloyd's Rule for Shipbuilding.

Dia. of Rivets.	⅝″			¾″			⅞″			1″			Rivets to be ¼ in. larger in diameter in the stem, stern post, and keel.
Thickness of Plates.	″ 5/16	″ 6/16	″ 7/16	″ 8/16	″ 9/16	″ 10/16	″ 11/16	″ 12/16	″ 13/16	″ 14/16	″ 15/16	″ 16/16	

Boilermaker's Rule.

Diameter of Rivets equals twice the thickness of the Plate, the Pitch equals 2½ to 3 diameters of the Rivet. Lap for single joints equals 3 diameters. Lap for double joints equals 5 diameters.

Weights of Rivets and Round-Headed Bolts Without Nuts Per 100.

LENGTH FROM UNDER HEAD. ONE CUBIC FOOT WEIGHING 480 LBS.

Length.	DIAMETER—INCHES.							
Inches.	⅜	½	⅝	¾	⅞	1	1⅛	1¼
1¼	5.4	12.6	21.5	28.7	43.1	65.3	91.5	123.
1½	6.2	13.9	23.7	31.8	47.3	70.7	98.4	133.
1¾	6.9	15.3	25.8	34.9	51.4	76.2	105.	142.
2	7.7	16.6	27.9	37.9	55.6	81.6	112.	150.
2¼	8.5	18.0	30.0	41.	59.8	87.1	119.	159.
2½	9.2	19.4	32.2	44.1	63.0	92.5	126.	167.
2¾	10.0	20.7	34.3	47.1	68.1	98.0	133.	176.
3	10.8	22.1	36.4	50.2	72.3	103.	140.	184.
3¼	11.5	23.5	38.6	53.3	76.5	109.	147.	193.
3½	12.3	24.8	40.7	56.4	80.7	114.	154.	201.
3¾	13.1	26.2	42.8	59.4	84.8	120.	161.	210.
4	13.8	27.5	45.0	62.5	89.0	125.	167.	218.
4¼	14.6	28.9	47.1	65.6	93.2	131.	174.	227.
4½	15.4	30.3	49.2	68.6	97.4	136.	181.	236.
4¾	16.2	31.6	51.4	71.7	102.	142.	188.	244.
5	16.9	33.0	53.5	74 8	106.	147.	195.	253.
5¼	17.7	34.4	55.6	77.8	110.	153.	202.	261.
5½	18.4	35.7	57.7	80.9	114.	158.	209.	270.
5¾	19.2	37.1	59.9	84.0	118.	163.	216.	278.
6	20.0	38.5	62.0	87.0	122.	169.	223.	287.
6½	21.5	41.2	66.3	93.2	131.	180.	236.	304.
7	23.0	43.9	70.5	99.3	139.	191.	250.	321.
7½	24.6	46.6	74.8	106.	147.	202.	264.	338.
8	26.1	49.4	79.0	112.	156.	213.	278.	355.
8½	27.6	52.1	83.3	118.	164.	223.	292.	372.
9	29.2	54.8	87.6	124.	173.	234.	306.	389.
9½	30.7	57.6	91.8	130.	181.	245.	319.	406.
10	32.2	60.3	96.1	136.	189.	256.	333.	423.
10½	33.8	63.0	101.	142.	198.	267.	347.	440.
11	35.3	65.7	105.	148.	206.	278.	361.	457.
11½	36.8	68.5	109.	155.	214.	289.	375.	474.
12	38.4	71.2	113.	161.	223.	300.	388.	491.
Heads.	1.8	5.7	10.9	13 4	22.2	38.0	57.0	82.0

Number of Rivets to One Hundred Pounds.

LENGTHS.	3/8	7/16	1/2	5/8	11/16	3/4	7/8
3/4	1965	1419	1092	.....	.....	.....	.....
7/8	1948	1335	1027	597	.....	.....	.....
1	1692	1222	940	538	450	.....	.....
1 1/4	1437	1036	797	487	389	356	228
1 1/2	1300	949	730	440	357	280	180
1 3/4	1200	900	693	390	325	262	169
2	1100	789	608	360	297	243	156
2 1/4	999	721	555	347	280	232	149
2 1/2	945	682	525	335	260	220	141
2 3/4	900	650	500	312	242	208	133
3	828	598	460	290	224	197	127
3 1/4	779	562	433	267	212	180	115
3 1/2	743	536	413	248	201	169	108
3 3/4	715	513	395	241	192	160	102
4	.....	.....	.....	236	184	158	99
4 1/2	.....	.....	.....	210	171	146	94
5	.....	.....	.....	190	161	135	87
5 1/2	.....	.....	.....	172	151	124	80
6	.....	.....	.....	157	140	115	74

Number of Belt Rivets and Burs in One Pound.

Inch.	1/4	5/16	3/8	7/16	1/2	9/16	5/8	3/4	7/8	1	1 1/8	1 1/4	1 1/2	Burs.
No 7	272	250	228	180	164	160	148	112	112	100	84	80	69	345
" 8	276	268	248	200	178	172	152	136	110	104	96	....	....	390
" 9	340	280	272	248	228	220	184	176	156	136	....	....	....	610
" 10	544	448	384	340	304	300	272	238	204	.....	....	....	....	716
" 12	588	512	452	404	364	334	304	272	... ..	... ..	....	....	....	985
" 13	996	852	532	.. ...	.. ...	.....	... .	.....	.....	.....	....	....	....	1640

Number of Copper Braziers' Rivets in One Pound.

Nos.	0	1	2	3	4	5	6	7	8	9	10
	148	100	70	44	34	24	18	12	9	6	4

The proper angle for a friction clutch is about 55 degrees.

In friction wheels the driver should be of the softer material.

Shearing and Bearing Value of Rivets.

Diam. of Rivet in Inches.		Area of Rivet	Single Shear at 7,500 lbs per Sq. Inch	Bearing Value for Different Thicknesses of Plate at 15,000 lbs. per Sq. Inch. (= Dia. of Rivet × Thickness of Plate × 15,000 lbs.)										
Fracti'n	Decimal			1/4"	5/16"	3/8"	7/16"	1/2"	9/16"	5/8"	11/16"	3/4"	13/16"	7/8"
3/8	.375	.1104	828	1410	....	....	....	....	.....	.....	.....	.....	.....	.....
7/16	.4375	.1503	1130	1640	2050	....	....	....	.....	.....	.....	.....	.....	.....
1/2	.5	.1963	1470	1880	2340	2810	....	....	.....	.....	.....	.....	.....	.....
9/16	.5625	.2485	1860	2110	2640	3160	3690	....	.....	.....	.....	.....	.....	.....
5/8	.625	.3068	2300	2340	2930	3520	4100	....	....	.. ..	.....	.....	.....	.....
11/16	.6875	.3712	2780	2580	3220	3870	4510	5160	.....	.....	.....	.....	....	.....
3/4	.75	.4418	3310	2810	3520	4220	4920	5630	6330	.....	.....	....	.....	.....
13/16	.8125	.5185	3890	3050	3810	4570	5330	6090	6860	7620	.....	....	.....	.....
7/8	.875	.6013	4510	3280	4100	4920	5740	6560	7380	8200	.....	.....	.....	.....
15/16	.9375	.6903	5180	3520	4390	5270	6150	7030	7910	8790	9670	.. .	.....	.....
1	1.0	.7854	5890	3750	4690	5 620	6560	7500	8440	9380	10310	11250	.....	.....
1 1/16	1.0625	.8866	6650	3980	4980	5980	6970	7970	8960	9960	10960	11950	12959	.....
1 1/8	1.125	.9940	7460	4220	5270	6330	7380	8440	9490	10550	11600	12660	13710	14770
1 3/16	1.1875	1.1075	8310	4450	5570	6680	7790	8910	10020	11130	12250	13360	14470	15590

WROUGHT SPIKES.

Hook Head Railroad Spikes—No. to Keg of 150 Pounds.

Size.	Average No. per Keg.	Ties 2 ft. between centers, 4 spikes ℔ tie make ℔ M.	Rails used. Weight ℔ yd.
6 x 9/16	264	5998 lbs. = 40 kegs.	45 to 70
5½ x 9/16	289	5522 " = 37 "	
5 x 9/16	312	5058 " = 35 "	40 " 56
5 x ½	412	3843 " = 25 "	35 " 40
4½ x ½	456	3474 " = 23 "	30 " 35
4 x ½	510	3104 " = 21 "	28 " 35
4½ x 7/16	550	2882 " = 19 "	25 " 30
4 x 7/16	613	2587 " = 17 "	
3½ x 7/16	675	2344 " = 16 "	20 " 25
4 x 3/8	819	1932 " = 13 "	
3½ x 3/8	965	1647 " = 11 "	16 " 20
3 x 3/8	1114	1425 " = 9½ "	
3½ x 5/16	1360	1162 " = 7⅔ "	12 " 16
3 x 5/16	1550	1023 " = 7 "	8 " 12
2½ x 5/16	1802	876 " = 6 "	

Street and Tram Rail Spike—Countersunk Heads.

Size.	No. to Keg of 150 lbs.	No. to lay 1 mile 2 ft. Apart.
2½ x ¼	2300	345 = 2⅓ kegs.
2½ x 5/16	1720	565 = 3¾ "
3 x 5/16	1250	640 = 4¼ "
3½ x 5/16	1150	690 = 4⅗ "
5 x 5/16	900	880 = 5⅞ "
6 x 5/16	840	940 = 6⅛ "
4 x ½	530	1500 = 10 "
4½ x ½	480	1650 = 11 "
6 x ½	360	2190 = 14⅝ "
6 x 9/16	270	2930 = 19½ "

Boat or Ship Spike—No. to Keg of 150 Pounds.

Length.	¼	5/16	3/8	7/16	½
3	2250	.....	.....	.....	.....
3½	1890	1208	.....	.....	.....
4	1650	1135	.....	.....	.....
4½	1464	1064	.....	.....	.....
5	1380	930	742	.....	.....
6	1292	868	570	.....	.....
7	1161	662	482	445	306
8	.....	635	455	384	256
9	.....	573	424	300	240
10	.....	.....	391	270	222
11	.....	.....	.....	249	203
12	.....	.....	.....	236	180

Weight of Elliptic Springs.

TEMPERED, PER PAIR.

1¼ x 3, 34 inches long.....26 lbs.	1½ x 5, 36 inches long.....50 lbs.
1¼ x 3, 36 " " .....28 "	1½ x 6, 36 " " .....60 "
1¼ x 4, 34 " " .....34 "	1¾ x 4, 36 " " .....51 "
1¼ x 4, 36 " " .....36 "	1¾ x 5, 36 " " .....58 "
1½ x 3, 34 " " .....32 "	1¾ x 6, 36 " " .....69 "
1½ x 3, 36 " " .....34 "	2 x 4, 36 " " .....64 "
1½ x 4, 34 " " .....41 "	2 x 5, 36 " " .....68 "
1½ x 4, 36 " " .....44 "	2 x 6, 36 " " .....83 "
1½ x 5, 34 " " .....47 "	2 x 7, 36 " " .....92 "

The elastic limit of tempered spring steel, and of hard drawn steel spring wire, will range from 120,000 to 140,000 pounds per square inch, one-half of which, or 60,000 pounds, may be safely taken as the maximum working stress.

The diameter of the spring should not be less than four or five times the diameter of the wire, in order that it may not be injured in coiling, and a larger diameter is desirable when it can be had.

Shingles.

Weights of shingles differ according to the character and specific gravity of the timber from which they are cut. In ordinary white pine a car load of 22,000 pounds of green shingles will be as follows:

18 inch, Green.....52,000 to 55,000	16 inch, Green.....60,000 to 65,000
18 " Dry.....60,000 to 65,000	16 " Dry.....70,000 to 75,000

The above for an average. There have been loaded 90,000 eighteen-inch shaved shingles, five butts to two and one-fourth inches, shingles one year old, seasoned under cover, on a ten-ton rate. One thousand shingles should lay one square, or a space of 10 feet by 10 feet.

To calculate the number of shingles for a roof, ascertain the number of

square feet and multiply by 4, if 2 inches are laid to the weather; and by 8, if 4½ inches; and by 7⅕, if 5 inches are exposed.

The length of rafter of ⅓ pitch is equal to ⅗ of width of building adding projection.

Table of Speed for Circular Saws.

Size of Saw. Inches.	Revolutions per Min.	Size of Saw. Inches.	Revolutions per Min.
8	4,500	42	870
10	3,600	44	840
12	3,000	46	800
14	2,585	48	750
16	2,222	50	725
18	2,000	52	700
20	1,800	54	675
22	1,636	56	650
24	1,500	58	625
26	1,384	60	600
28	1,285	62	575
30	1,200	64	550
32	1,125	66	545
34	1,058	68	529
36	1,000	70	514
38	950	72	500
40	900		

Weights of Horse and Mule Shoes.

Horse Shoes.	Light Pattern.	Medium Pattern.	Heavy Pattern.
No. 0, Fore	12 ounces.		
" 1, "	14 "	17 ounces.	19 ounces.
" 2, "	17 "	20 "	23 "
" 3, "	20 "	24 "	26 "
" 4, "	24 "	28 "	32 "
" 5, "	29 "	34 "	39 "
" 6, "	36 "	41 "	46 "
" 7, "		48 "	
" 0, Hind	10 "		
" 1, "	11 "	14 "	15 "
" 2, "	14 "	16 "	18 "
" 3, "	18 "	20 "	23 "
" 4, "	22 "	24 "	27 "
" 5, "	27 "	29 "	32 "
" 6, "	32 "	35 "	38 "
" 7, "		38 "	

No. 1, Mule	10 ounces.
" 2, "	12 "
" 3, "	15 "
" 4, "	19 "
" 5, "	24 "

TRANSMITTING EFFICIENCY OF TURNED IRON SHAFTING, AT DIFFERENT SPEEDS.

As Prime Mover or Head Shaft, Carrying Main Driving Pulley or Gear, Well Supported by Bearings.

Diameter of Shaft.	NUMBER OF REVOLUTIONS PER MINUTE.										
	60	80	100	125	150	175	200	225	250	275	300
Inches.	H. P.	H. P.	H. P.	H. P.	H. P.	H. P.	H. P.	H. P.	H. P.	H. P.	H. P.
1¾	2.6	3.4	4.3	5.4	6.4	7.5	8.6	9.7	10.7	11.8	12.9
2	3.8	5.1	6.4	8	9.6	11.2	12.8	14.4	16	17.6	19.2
2¼	5.4	7.3	8.1	10	12	14	16	18	20	22	24
2½	7.5	10	12.5	15	18	22	25	28	31	34	37
2¾	10	13	16	20	24	28	32	36	40	44	48
3	13	17	20	25	30	35	40	45	50	55	60
3¼	16	22	27	34	40	47	54	61	67	74	81
3½	20	27	34	42	51	59	68	76	85	93	102
3¾	25	33	42	52	63	73	84	94	105	115	126
4	30	41	51	64	76	89	102	115	127	140	153
4½	43	58	72	90	108	126	144	162	180	198	216
5	60	80	100	125	150	175	200	225	250	275	300
5½	80	106	133	166	199	233	266	299	333	366	400

As Second Movers or Line Shafting, Bearings 8 Feet Apart.

Diameter of Shaft.	NUMBER OF REVOLUTIONS PER MINUTE.										
	100	125	150	175	200	225	250	275	300	325	350
Inches.	H. P.	H. P.	H. P.	H. P.	H. P.	H. P.	H. P.	H. P.	H. P.	H. P.	H. P.
1¾	6	7.4	8.9	10.4	11.9	13.4	14.9	16.4	17.9	19.4	20.9
1⅞	7.3	9.1	10.9	12.7	14.5	16.3	18.2	20	21.8	23.6	25.4
2	8.9	11.1	13.3	15.5	17.7	20	22.2	24.4	26.6	28.8	31
2⅛	10.6	13.2	15.9	18.5	21.2	23.8	26.5	29.1	31.8	34.4	37
2¼	12.6	15.8	19	22	25	28	31	35	38	41	44
2⅜	15	18	22	26	29	33	37	41	44	48	52
2½	17	21	26	30	34	39	43	47	52	56	60
2¾	23	29	34	40	46	52	58	64	69	75	81
3	30	37	45	52	60	67	75	82	90	97	105
3¼	38	47	57	66	76	85	95	104	114	123	133
3½	47	59	71	83	95	107	119	131	143	155	167
3¾	58	73	88	102	117	132	146	162	176	190	205
4	71	89	107	125	142	160	178	196	213	231	249

For Simply Transmitting Power.

Diameter of Shaft.	NUMBER OF REVOLUTIONS PER MINUTE.										
	100	125	150	175	200	233	267	300	333	367	400
Inches.	H. P.	H. P.	H. P.	H. P.	H. P.	H. P.	H. P.	H. P.	H. P.	H. P.	H. P.
1½	6.7	8.4	10.1	11.8	13.5	15.7	17.9	20.3	22.5	24.8	27
1⅝	8.6	10.7	12.8	15	17.1	20	22.8	25.8	28.6	31.5	34.3
1¾	10.7	13.4	16	18.7	21.5	25	28	32	36	39	43
1⅞	13.2	16.5	19.7	23	26.4	31	35	39	44	48	52
2	16	20	24	28	32	37	42	48	53	58	64
2⅛	19	24	29	33	38	44	51	57	63	70	76
2¼	22	28	34	39	45	52	60	68	75	83	90
2⅜	27	33	40	47	53	62	70	79	88	96	105
2½	31	39	47	54	62	73	83	93	104	114	125
2¾	41	52	62	73	83	97	111	125	139	153	167
3	54	67	81	94	108	126	144	162	180	198	216
3¼	68	86	103	120	137	160	182	205	228	250	273
3½	85	107	128	150	171	200	228	257	285	313	342

Shafting.

To find the power of a shaft when its diameter and speed are given.

RULE: Multiply the cube of the diameter of shaft by 600, and that product by the number of revolutions per minute, and divide by 33,000. The quotient will be the horse power of shaft approximately.

To find the speed of a shaft when its diameter and the power it is required to transmit are given.

RULE: Multiply the given power by 33,000 and divide the product by 600, this quotient divided by the cube of the diameter of the shaft will give the speed required.

To find the requisite diameter of a wrought iron shaft, the horse power to be transmitted, and the revolutions of shaft per minute being given.

RULE: Multiply the given horse power by 190, divide the product by the number of revolutions per minute, and the cube root of the quotient will be the required diameter of shaft in inches.

EXAMPLE: 10 H. P. $\times$ 190 = 1900.

$$\frac{1900}{50} = 38,$$

revolutions per minute.

The cube root of 38 = 3.36 nearly. 3.36 inches. Ans.

Horse Power Line Shafting Will Transmit with Safety, Bearings Say 8 to 10 Feet Apart.

Diam. of Shaft in Inches.	Horse Power in One Revolution.	Diam. of Shaft in Inches.	Horse Power in One Revolution.
$\frac{15}{16}$	.008	$3\frac{15}{16}$	.512
$1\frac{3}{16}$	.016	$4\frac{7}{16}$	.728
$1\frac{7}{16}$	.027	$4\frac{15}{16}$	1.100
$1\frac{11}{16}$	.043	$5\frac{7}{16}$	1.328
$1\frac{15}{16}$	.064	$5\frac{15}{16}$	1.728
$2\frac{3}{16}$	.091	$6\frac{7}{16}$	2.195
$2\frac{7}{16}$	.125	$6\frac{15}{16}$	2.744
$2\frac{11}{16}$	.166	$7\frac{7}{16}$	3.368
$2\frac{15}{16}$	.216	$7\frac{15}{16}$	4.096
$3\frac{3}{16}$	.272	$8\frac{7}{16}$	4.912
$3\frac{7}{16}$	.343	$8\frac{15}{16}$	5.824
$3\frac{11}{16}$	.424	$9\frac{7}{16}$	6.848

Speed in Turning Shafting.

With special shafting lathe 14-inch swing, 50 feet between centers, 2 tools and burnishing die.

1½ in. diam	18	feet per hour.
1¾ " "	15	" "
2 " "	13½	" "
2¼ " "	12	" "
2½ " "	10½	" "
3 " "	9	" "
3½ " "	7½	" "
4 " "	6½	" "

Steam.

Pure steam is composed of two volumes of hydrogen and one of oxygen; or, by weight, one of hydrogen and eight of oxygen. If two cubic feet of hydrogen and one of oxygen are united, they will form only two cubic feet of steam, or a volume equal to that of the hydrogen and equal in weight to both.

Steam is three-eights lighter than common air. An atmosphere of pure steam would only weigh a little over nine pounds, yet water, of which it is composed, is 770 times heavier than air. Watt gives the latent heat of steam at one atmosphere as 988 degrees; at 10 atmospheres as 840 degrees. Southern gives the latent heat as constant at 950 degrees at all temperatures. Lavoisier at 1,000 degrees. Rumford at 1,009 degrees, and Regnault at 966 degrees.

In measuring the quantity of heat contained in steam, the ordinary thermometer is useless.

One cubic inch of water generated into steam contains sufficient heat to raise the temperature of 5½ cubic inches from 32 degrees Fahr. to 212 degrees, making in all, when condensed, 6½ inches of water at 212 degrees; yet the steam only indicated 212 degrees. Hence, if we multiply 6½ by 212 degrees, and deduct the 32 degrees contained in the 5½ inches of water, we will have 1,202 as the amount of heat obtained from 1,700 cubic inches of steam, or the amount necessary to evaporate one cubic inch of water into steam, yet the steam will indicate, by the thermometer, as having only received 108 degrees, when, as shown by the above calculation, it has received 1,170 degrees, and yielded up to the 5½ inches of water 990 degrees.

Steam flowing into a vacuum at an expansive pressure of 15 pounds per square inch, travels at the rate of 1,550 feet per second; and flowing into the air, at the rate of 650 feet per second, for a pressure of 15 pounds per square inch.

By this it will be seen that a small pipe will discharge a very large quantity of steam.

A 2-inch pipe will discharge over 100-horse power of steam into a coil surrounded by water sufficient to produce a vacuum, and about the same, when the steam is discharged into water.

In such cases there should be no more than one square inch of steam opening from the boiler for every 50-horse power of its capacity, and at that rate for all sizes of boiler.

When steam is used for heating water in tanks by discharging it into the water, there should be about 5 pounds of water brought to a temperature of 212 degrees for every pound of water evaporated in the boiler.

When coils are used for heating water they should be located above the boiler, and the condensed water returned to the boiler, by its own gravity, or a pump may be used to return the water, thereby saving as much fuel as has been used to bring this water to the temperature at which it leaves the coils.

Table of Properties of Saturated Steam.

Pressure per Square Inch by Gauge.	Temperature in Fahrenheit Degrees.	Latent Heat in Heat Units.	Total Heat in Heat Units From Water at 32° F.	Relative Volume or Cubic Feet of Steam From One Cubic Ft. of Water.
5	227.917	954.415	1151.454	1220.3
10	240.000	945.825	1155.139	984.8
15	250.245	938.925	1158.263	826.8
20	259.176	932.152	1160.987	713.4
25	267.120	926.472	1163.410	628.2
30	274.296	921.334	1165.600	561.8
35	280.854	916.631	1167.600	508.5
40	286.897	912.290	1169.442	464.7
45	292.520	908.247	1171.158	428.5
50	297.777	904.462	1172.762	397.7
55	302.718	900.899	1174.269	371.2
60	307.388	897.526	1175.692	348.3
65	311.812	894.330	1177.042	328.3
70	316.021	891.286	1178.326	310.5
75	320.039	888.375	1179.551	294.7
80	323.884	885.588	1180.724	280.6
85	327.571	883.914	1181.849	267.9
90	331.113	880.342	1182.929	265.5
95	334.523	877.865	1183.970	246.0
100	337.814	875.472	1184.974	236.3
105	340.995	873.155	1185.944	227.6
110	344.074	870.911	1186.883	219.7
115	347.059	868.735	1187.794	212.3
125	352.757	864.566	1189.535	199.0
135	358.161	860.621	1191.180	187.5
145	363.277	856.874	1192.741	177.3
155	368.158	853.294	1194.228	168.4
165	372.822	849.869	1195.650	160.4
175	377.291	846.584	1197.013	153.4
185	381.573	843.432	1198.319	147.1
235	401.072	831.222	1203.735	114.
285	418.225	819.610	1208.737	96.
335	431.956	810.690	1212.580	83.
385	444.919	800.198	1217.094	73.

NOTE.—By the term Saturated Steam is meant not as some think *wet steam*, but simply *dry* steam, as it is formed in contact with water.

A belt will run toward the ends of the shafts that are nearest together.

A good average consumption of coal per horse power, per hour, for a good compound engine is about 1.75 pounds of coal.

Table of Steam Used Expansively.

Inital Presure in lbs. Per Square Inch.	Average Pressure of Steam in lbs. per Square Inch, for the Whole Stroke.					
	Portion of Stroke at which Steam is Cut Off.					
	¾	⅝	½	⅜	¼	⅛
5	4.8	4.6	4 2	3.7	2.9	1.9
10	9.6	9.1	8.4	7.4	5.9	3.8
15	14.4	13.7	12 7	11.1	8.9	5.7
20	19.2	18.3	16.9	14.8	11.9	7.6
25	24.1	22.9	21.1	18.5	14.9	9.5
30	28.9	27.5	25.4	22.2	17.9	11.5
35	33.8	32.1	29.6	25.9	20.8	13.4
40	37.5	36.7	33.8	29 6	23.8	15.4
45	43.4	41.3	38.1	33.3	26.8	17.3
50	48.2	45.9	42.3	37.0	29.8	19.2
60	57.8	55.1	50.7	44.5	35.7	23.1
70	67.4	64.3	59.2	52.4	41.7	26.9
80	77.1	73.5	67.7	59.3	47.7	30.8
90	86.7	82.6	76.1	66.7	53.6	34.6
100	96.3	91.8	84.6	74.1	59.6	38.4
110	106.0	101.0	93.1	81.5	65.6	42.5
120	115.2	110.2	101.5	89.4	71.5	46.1
130	125.4	119.1	110.0	95.3	77.5	50.0
140	134.9	128.6	118.5	103.8	83.3	53.8
150	144.7	137.8	126.4	111.2	89.4	57.7
160	153.6	147.0	135.4	118.2	95.4	61.5
180	173.5	164.6	152.3	132.9	107.3	69.2
200	192.7	183.7	169.3	148.3	119.3	76.9

Velocity of Steam Escaping Into the Atmosphere.

Pressure Above Atmosphere.	Velocity Per Second.	Pressure Above Atmosphere.	Velocity Per Second.
Pounds.	Feet.	Pounds.	Feet.
1	540	50	1736
2	698	60	1777
3	814	70	1810
4	905	80	1835
5	981	90	1857
10	1232	100	1875
20	1476	110	1889
30	1601	120	1900
40	1681	130	1909

Ordinary ⅜-inch rubber tubing will stand a pressure of from 10 to 15 lbs. per square inch.

NATURAL SINES, TANGENTS AND SECANTS,

ADVANCING BY 10 MIN.

Deg.	Min.	Sine.	Tangent	Secant.	Deg.	Min.	Sine.	Tangent.	Secant.
0	00	.0000	.0000	1.0000	7	00	.1219	.1228	1.0075
	10	.0029	.0029	1.0000		10	.1248	.1257	1.0079
	20	.0058	.0058	1.0000		20	.1276	.1287	1.0082
	30	.0087	.0087	1.0000		30	.1305	.1317	1.0086
	40	.0116	.0116	1.0001		40	.1334	.1346	1.0090
	50	.0145	.0145	1.0001		50	.1363	.1376	1.0094
1	00	.0175	.0175	1.0002	8	00	.1392	.1405	1.0098
	10	.0204	.0204	1.0002		10	.1421	.1435	1.0102
	20	.0233	.0233	1.0003		20	.1449	.1465	1.0107
	30	.0262	.0262	1.0003		30	.1478	.1495	1.0111
	40	.0291	.0291	1.0004		40	.1507	.1524	1.0116
	50	.0320	.0320	1.0005		50	.1536	.1554	1.0120
2	00	.0349	.0349	1.0006	9	00	.1564	.1584	1.0125
	10	.0378	.0378	1.0007		10	.1593	.1614	1.0129
	20	.0407	.0407	1.0008		20	.1622	.1644	1.0134
	30	.0436	.0437	1.0010		30	.1650	.1673	1.0139
	40	.0465	.0466	1.0011		40	.1679	.1703	1.0144
	50	.0494	.0495	1.0012		50	.1708	.1733	1.0149
3	00	.0523	.0524	1.0014	10	00	.1736	.1763	1.0154
	10	.0552	.0553	1.0015		10	.1765	.1793	1.0160
	20	.0581	.0582	1.0017		20	.1794	.1823	1.0165
	30	.0610	.0612	1.0019		30	.1822	.1853	1.0170
	40	.0640	.0641	1.0021		40	.1851	.1883	1.0176
	50	.0669	.0670	1.0022		50	.1880	.1914	1.0181
4	00	.0698	.0699	1.0024	11	00	.1908	.1944	1.0187
	10	.0727	.0729	1.0027		10	.1937	.1974	1.0193
	20	.0756	.0758	1.0029		20	.1965	.2004	1.0199
	30	.0785	.0787	1.0031		30	.1994	.2035	1.0205
	40	.0814	.0816	1.0033		40	.2022	.2065	1.0211
	50	.0843	.0846	1.0036		50	.2051	.2095	1.0217
5	00	.0872	.0875	1.0038	12	00	.2079	.2126	1.0223
	10	.0901	.0904	1.0041		10	.2108	.2156	1.0230
	20	.0929	.0934	1.0043		20	.2136	.2186	1.0236
	30	.0958	.0963	1.0046		30	.2164	.2217	1.0243
	40	.0987	.0992	1.0049		40	.2193	.2247	1.0249
	50	.1016	.1022	1.0052		50	.2221	.2278	1.0256
6	00	.1045	.1051	1.0055	13	00	.2250	.2309	1.0263
	10	.1074	.1080	1.0058		10	.2278	.2339	1.0270
	20	.1103	.1110	1.0061		20	.2306	.2370	1.0277
	30	.1132	.1139	1.0065		30	.2334	.2401	1.0284
	40	.1161	.1169	1.0068		40	.2363	.2432	1.0291
	50	.1190	.1198	1.0072		50	.2391	.2462	1.0299

Natural Sines, Tangents and Secants.

(*Continued.*)

Deg.	Min.	Sine.	Tangent.	Secant.	Deg	Min.	Sine.	Tangent.	Secant.
14	00	.2419	.2493	1.0306	21	00	.3584	.3839	1.0711
	10	.2447	.2524	1.0314		10	.3611	.3872	1.0723
	20	.2476	.2555	1.0321		20	.3638	.3906	1.0736
	30	.2504	.2586	1.0329		30	.3665	.3939	1.0748
	40	.2532	.2617	1.0337		40	.3692	.3973	1.0760
	50	.2560	.2648	1.0345		50	.3719	.4006	1.0773
15	00	.2588	.2679	1.0353	22	00	.3746	.4040	1.0785
	10	.2616	.2711	1.0361		10	.3773	.4074	1.0798
	20	.2644	.2742	1.0369		20	.3800	.4108	1.0811
	30	.2672	.2773	1.0377		30	.3827	.4142	1.0824
	40	.2700	.2805	1.0386		40	.3854	.4176	1.0837
	50	.2728	.2836	1.0394		50	.3881	.4210	1.0850
16	00	.2756	.2867	1.0403	23	00	.3907	.4245	1.0864
	10	.2784	.2899	1.0412		10	.3934	.4279	1.0877
	20	.2812	.2931	1.0421		20	.3961	.4314	1.0891
	30	.2840	.2962	1.0429		30	.3987	.4348	1.0904
	40	.2868	.2994	1.0439		40	.4014	.4383	1.0918
	50	.2896	.3026	1.0448		50	.4041	.4417	1.0932
17	00	.2924	.3057	1.0457	24	00	.4067	.4452	1.0946
	10	.2952	.3089	1.0466		10	.4094	.4487	1.0961
	20	.2979	.3121	1.0476		20	.4120	.4522	1.0975
	30	.3007	.3153	1.0485		30	.4147	.4557	1.0989
	40	.3035	.3185	1.0495		40	.4173	.4592	1.1004
	50	.3062	.3217	1.0505		50	.4200	.4628	1.1019
18	00	.3090	.3249	1.0515	25	00	.4226	.4663	1.1034
	10	.3118	.3281	1.0525		10	.4253	.4699	1.1049
	20	.3145	.3314	1.0535		20	.4279	.4734	1.1064
	30	.3173	.3346	1.0545		30	.4305	.4770	1.1079
	40	.3201	.3378	1.0555		40	.4331	.4806	1.1095
	50	.3228	.3411	1.0566		50	.4358	.4841	1.1110
19	00	.3256	.3443	1.0576	26	00	.4384	.4877	1.1126
	10	.3283	.3476	1.0587		10	.4410	.4913	1.1142
	20	.3311	.3508	1.0598		20	.4436	.4950	1.1158
	30	.3338	.3541	1.0608		30	.4462	.4986	1.1174
	40	.3365	.3574	1.0619		40	.4488	.5022	1.1190
	50	.3393	.3607	1.0631		50	.4514	.5059	1.1207
20	00	.3420	.3640	1.0642	27	00	.4540	.5095	1.1223
	10	.3448	.3673	1.0653		10	.4566	.5132	1.1240
	20	.3475	.3706	1.0665		20	.4592	.5169	1.1257
	30	.3502	.3739	1.0676		30	.4617	.5206	1.1274
	40	.3529	.3772	1.0688		40	.4643	.5243	1.1291
	50	.3557	.3805	1.0700		50	.4669	.5280	1.1308

Natural Sines, Tangents and Secants.

(*Continued.*)

Deg.	Min.	Sine.	Tangent.	Secant.	Deg.	Min.	Sine.	Tangent.	Secant.
28	00	.4695	.5317	1.1326	35	00	.5736	.7002	1.2208
	10	.4720	.5354	1.1343		10	.5760	.7046	1.2233
	20	.4746	.5392	1.1361		20	.5783	.7089	1.2258
	30	.4772	.5430	1.1379		30	.5807	.7133	1.2283
	40	.4797	.5467	1.1397		40	.5831	.7177	1.2309
	50	.4823	.5505	1.1415		50	.5854	.7221	1.2335
29	00	.4848	.5543	1.1434	36	00	.5878	.7265	1.2361
	10	.4874	.5581	1.1452		10	.5901	.7310	1.2387
	20	.4899	.5619	1.1471		20	.5925	.7355	1.2413
	30	.4924	.5658	1.1490		30	.5948	.7400	1.2440
	40	.4950	.5696	1.1509		40	.5972	.7445	1.2467
	50	.4975	.5735	1.1528		50	.5995	.7490	1.2494
30	00	.5000	.5774	1.1547	37	00	.6018	.7536	1.2521
	10	.5025	.5812	1.1566		10	.6041	.7581	1.2549
	20	.5050	.5851	1.1586		20	.6065	.7627	1.2577
	30	.5075	.5890	1.1606		30	.6088	.7673	1.2605
	40	.5100	.5930	1.1626		40	.6111	.7720	1.2633
	50	.5125	.5969	1.1646		50	.6134	.7766	1.2661
31	00	.5150	6009	1.1666	38	00	.6157	.7813	1.2690
	10	.5175	.6048	1.1687		10	.6180	.7860	1.2719
	20	.5200	.6088	1.1707		20	.6202	.7907	1.2748
	30	.5225	.6128	1.1728		30	.6225	.7954	1.2778
	40	.5250	.6168	1.1749		40	.6248	.8002	1.2808
	50	.5275	.6208	1.1770		50	.6271	.8050	1.2837
32	00	.5299	.6249	1.1792	39	00	.6293	.8098	1.2868
	10	.5324	.6289	1.1813		10	.6316	.8146	1.2898
	20	.5348	.6330	1.1835		20	.6338	.8195	1.2929
	30	.5373	.6371	1.1857		30	.6361	.8243	1.2960
	40	.5398	.6412	1.1879		40	.6383	.8292	1.2991
	50	.5422	.6453	1.1901		50	.6406	.8342	1.3022
33	00	.5446	.6494	1.1924	40	00	.6428	.8391	1.3054
	10	.5471	.6536	1.1946		10	.6450	.8441	1.3086
	20	.5495	.6577	1.1969		20	.6472	.8491	1.3118
	30	.5519	.6619	1.1992		30	.6494	.8541	1.3151
	40	.5544	.6661	1.2015		40	.6517	.8591	1.3184
	50	.5568	.6703	1.2039		50	.6539	.8642	1.3217
34	00	.5592	.6745	1.2062	41	00	.6561	.8693	1.3250
	10	.5616	.6787	1.2086		10	.6583	.8744	1.3284
	20	.5640	.6830	1.2110		20	.6604	.8796	1.3318
	30	.5664	.6873	1.2134		30	.6626	.8847	1.3352
	40	.5688	.6916	1.2158		40	.6648	.8899	1.3386
	50	.5712	.6959	1.2183		50	.6670	.8952	1.3421

Natural Sines, Tangents and Secants.

(*Continued.*)

Deg.	Min.	Sine.	Tangent.	Secant.	Deg.	Min.	Sine.	Tangent.	Secant.
42	00	.6691	.9004	1.3456	49	00	.7547	1.1504	1.5243
	10	.6713	.9057	1.3492		10	.7566	1.1571	1.5294
	20	.6734	.9110	1.3527		20	.7585	1.1640	1.5345
	30	.6756	.9163	1.3563		30	.7604	1.1708	1.5398
	40	.6777	.9217	1.3600		40	.7623	1.1778	1.5450
	50	.6799	.9271	1.3636		50	.7642	1.1847	1.5504
43	00	.6820	.9325	1.3673	50	00	.7660	1.1918	1.5557
	10	.6841	.9380	1.3711		10	.7679	1.1988	1.5611
	20	6862	.9435	1.3748		20	.7698	1.2059	1 5666
	30	.6884	.9490	1.3786		30	.7716	1.2131	1.5721
	40	.6905	.9545	1.3824		40	.7735	1.2203	1 5777
	50	.6926	.9601	1.3863		50	.7753	1.2276	1.5833
44	00	.6947	.9657	1.3902	51	00	.7771	1.2349	1.5890
	10	.6967	.9713	1.3941		10	.7790	1.2423	1.5948
	20	.6988	.9770	1.3980		20	.7808	1.2497	1.6005
	30	.7009	.9827	1.4020		30	.7826	1.2572	1.6064
	40	.7030	.9884	1.4061		40	.7844	1.2647	1.6123
	50	.7050	.9942	1.4101		50	.7862	1.2723	1 6183
45	00	.7071	1.0000	1.4142	52	00	.7880	1.2799	1.6243
	10	.7092	1.0058	1.4183		10	.7898	1.2876	1 6303
	20	.7112	1.0117	1.4225		20	.7916	1.2954	1.6365
	30	.7133	1.0176	1.4267		30	.7934	1.3032	1.6427
	40	.7153	1.0235	1.4310		40	.7951	1.3111	1.6489
	50	.7173	1.0295	1.4352		50	.7969	1.3190	1.6553
46	00	.7193	1.0355	1.4396	53	00	.7986	1.3270	1.6616
	10	.7214	1.0416	1.4439		10	.8004	1.3351	1.6681
	20	.7234	1.0477	1.4483		20	.8021	1.3432	1.6746
	30	.7254	1.0538	1.4527		30	.8039	1.3514	1.6812
	40	.7274	1.0599	1.4572		40	.8056	1.3597	1.6878
	50	.7294	1.0661	1.4617		50	.8073	1.3680	1.6945
47	00	.7314	1.0724	1.4663	54	00	.8090	1.3764	1.7013
	10	.7333	1.0786	1.4709		10	.8107	1.3848	1.7081
	20	.7353	1.0850	1.4755		20	.8124	1.3934	1.7151
	30	.7373	1.0913	1.4802		30	.8141	1.4019	1.7221
	40	.7392	1.0977	1.4849		40	.8158	1.4106	1.7291
	50	.7412	1.1041	1.4897		50	.8175	1.4193	1.7362
48	00	.7431	1.1106	1.4945	55	00	.8192	1.4281	1.7434
	10	.7451	1.1171	1.4993		10	.8208	1.4370	1.7507
	20	.7470	1.1237	1.5042		20	.8225	1.4460	1.7581
	30	.7490	1.1303	1.5092		30	.8241	1.4550	1.7655
	40	.7509	1.1369	1.5141		40	.8258	1.4641	1.7730
	50	.7528	1.1436	1.5192		50	.8274	1.4733	1.7806

Natural Sines, Tangents and Secants.

(*Continued.*)

Deg.	Min.	Sine.	Tangent.	Secant.	Deg.	Min.	Sine.	Tangent.	Secant.
56	00	.8290	1.4826	1.7883	63	00	.8910	1.9626	2.2027
	10	.8307	1.4919	1.7960		10	.8923	1.9768	2.2153
	20	.8323	1.5013	1.8039		20	.8936	1.9912	2.2282
	30	.8339	1.5108	1.8118		30	.8949	2.0057	2.2412
	40	.8355	1.5204	1.8198		40	.8962	2.0204	2.2543
	50	.8371	1.5301	1.8279		50	.8975	2.0353	2.2677
57	00	.8387	1.5399	1.8361	64	00	.8988	2.0503	2.2812
	10	.8403	1.5497	1.8443		10	.9001	2.0655	2.2949
	20	.8418	1.5597	1.8527		20	.9013	2.0809	2.3088
	30	.8434	1.5697	1.8612		30	.9026	2.0965	2.3228
	40	.8450	1.5798	1.8699		40	.9038	2.1123	2.3371
	50	.8465	1.5900	1.8783		50	.9051	2.1283	2.3515
58	00	.8480	1.6003	1.8871	65	00	.9063	2.1445	2.3662
	10	.8496	1.6107	1.8959		10	.9075	2.1609	2.3811
	20	.8511	1.6213	1.9048		20	.9088	2.1775	2.3961
	30	.8526	1.6319	1.9139		30	.9100	2.1943	2.4114
	40	.8542	1.6426	1.9230		40	.9112	2.2113	2.4269
	50	.8557	1.6534	1.9323		50	.9124	2.2286	2.4426
59	00	.8572	1.6643	1.9416	66	00	.9135	2.2460	2.4586
	10	.8587	1.6753	1.9511		10	.9147	2.2637	2.4748
	20	.8601	1.6864	1.9606		20	.9159	2.2817	2.4912
	30	.8616	1.6977	1.9703		30	.9171	2.2998	2.5078
	40	.8631	1.7090	1.9801		40	.9182	2.3183	2.5247
	50	.8646	1.7205	1.9900		50	.9194	2.3369	2.5419
60	00	.8660	1.7321	2.0000	67	00	.9205	2.3559	2.5593
	10	.8675	1.7437	2.0101		10	.9216	2.3750	2.5770
	20	.8689	1.7556	2.0204		20	.9228	2.3945	2.5949
	30	.8704	1.7675	2.0308		30	.9239	2.4141	2.6131
	40	.8718	1.7796	2.0413		40	.9250	2.4342	2.6316
	50	.8732	1.7917	2.0519		50	.9261	2.4545	2.6504
61	00	.8746	1.8040	2.0627	68	00	.9272	2.4751	2.6695
	10	.8760	1.8165	2.0736		10	.9283	2.4960	2.6888
	20	.8774	1.8291	2.0846		20	.9293	2.5172	2.7085
	30	.8788	1.8418	2.0957		30	.9304	2.5386	2.7285
	40	.8802	1.8546	2.1070		40	.9315	2.5605	2.7488
	50	.8816	1.8676	2.1185		50	.9325	2.5826	2.7695
62	00	.8829	1.8807	2.1301	69	00	.9336	2.6051	2.7904
	10	.8843	1.8940	2.1418		10	.9346	2.6279	2.8117
	20	.8857	1.9074	2.1637		20	.9356	2.6511	2.8334
	30	.8870	1.9210	2.1657		30	.9367	2.6746	2.8555
	40	.8884	1.9347	2.1786		40	.9377	2.6985	2.8779
	50	.8897	1.9486	2.1902		50	.9387	2.7228	2.9006

Natural Sines, Tangents and Secants.

(*Continued.*)

Deg.	Min.	Sine.	Tangent.	Secant.	Deg.	Min.	Sine.	Tangent.	Secant.
70	00	.9397	2.7475	2.9238	77	00	.9744	4.3315	4.4454
	10	.9407	2.7725	2.9474		10	.9750	4.3897	4.5022
	20	.9417	2.7980	2.9713		20	.9757	4.4494	4.5604
	30	.9426	2.8239	2.9957		30	.9763	4.5107	4.6202
	40	.9436	2.8502	3.0206		40	.9769	4.5736	4.6817
	50	.9446	2.8770	3.0458		50	.9775	4.6382	4.7448
71	00	.9455	2.9042	3.0716	78	00	.9781	4.7046	4.8097
	10	.9465	2.9319	3.0977		10	.9787	4.7729	4.8765
	20	.9474	2.9600	3.1244		20	.9793	4.8430	4.9452
	30	.9483	2.9887	3.1515		30	.9799	4.9152	5.0159
	40	.9492	3.0178	3.1792		40	.9805	4.9894	5.0886
	50	.9502	3.0475	3.2074		50	.9811	5.0658	5.1636
72	00	.9511	3.0777	3.2361	79	00	.9816	5.1446	5.2408
	10	.9520	3.1084	3.2653		10	.9822	5.2257	5.3205
	20	.9528	3.1397	3.2951		20	.9827	5.3093	5.4026
	30	.9537	3.1716	3.3255		30	.9833	5.3955	5.4874
	40	.9546	3.2041	3.3565		40	.9838	5.4845	5.5749
	50	.9555	3.2371	3.3881		50	.9843	5.5764	5.6653
73	00	.9563	3.2709	3.4203	80	00	.9848	5.6713	5.7588
	10	.9572	3.3052	3.4532		10	.9853	5.7694	5.8554
	20	.9580	3.3402	3.4867		20	.9858	5.8708	5.9554
	30	.9588	3.3759	3.5209		30	.9863	5.9758	6.0589
	40	.9596	3.4124	3.5559		40	.9868	6.0844	6.1661
	50	.9605	3.4495	3.5915		50	.9872	6.1970	6.2772
74	00	.9613	3.4874	3.6280	81	00	.9877	6.3138	6.3925
	10	.9621	3.5261	3.6652		10	.9881	6.4348	6.5121
	20	.9628	3.5656	3.7032		20	.9886	6.5606	6.6363
	30	.9636	3.6059	3.7420		30	.9890	6.6912	6.7655
	40	.9644	3.6470	3.7817		40	.9894	6.8269	6.8998
	50	.9652	3.6891	3.8222		50	.9899	6.9682	7.0396
75	00	.9659	3.7321	3.8637	82	00	.9903	7.1154	7.1853
	10	.9667	3.7760	3.9061		10	.9907	7.2687	7.3372
	20	.9674	3.8208	3.9495		20	.9911	7.4287	7.4957
	30	.9681	3.8667	3.9939		30	.9914	7.5958	7.6613
	40	.9689	3.9136	4.0394		40	.9918	7.7704	7.8344
	50	.9696	3.9617	4.0859		50	.9922	7.9530	8.0156
76	00	.9703	4.0108	4.1336	83	00	.9925	8.1443	8.2055
	10	.9710	4.0611	4.1824		10	.9929	8.3450	8.4047
	20	.9717	4.1126	4.2324		20	.9932	8.5555	8.6138
	30	.9724	4.1653	4.2837		30	.9936	8.7769	8.8337
	40	.9730	4.2193	4.3362		40	.9939	9.0098	9.0652
	50	.9737	4.2747	4.3901		50	.9942	9.2553	9.3092

Natural Sines, Tangents and Secants,

(*Continued.*)

Deg.	Min.	Sine.	Tangent.	Secant.	Deg.	Min.	Sine.	Tangent.	Secant.
84	00	.9945	9.5144	9.5668	87	00	.9986	19.081	19.107
	10	.9948	9.7882	9.8391		10	.9988	20.206	20.230
	20	.9951	10.0780	10.1275		20	.9989	21.470	21.494
	30	.9954	10.3854	10.4334		30	.9990	22.904	22.926
	40	.9957	10.7119	10.7585		40	.9992	24.542	24 562
	50	.9959	11.0594	11.1045		50	.9993	26.432	26.451
85	00	.9962	11.430	11.474	88	00	.9994	28.636	28.654
	10	.9964	11.826	11.868		10	.9995	31.242	31.258
	20	.9967	12.251	12.291		20	.9996	34.368	34 382
	30	.9969	12.706	12.745		30	.9997	38.188	38.202
	40	.9971	13.197	13.235		40	.9997	42.964	42.976
	50	.9974	13.727	13.763		50	.9998	49.104	49.114
86	00	.9976	14.301	14.336	89	00	.9998	57.290	57.299
	10	.9978	14.924	14.958		10	.9999	68.750	68.757
	20	.9980	15.605	15.637		20	.9999	85.940	85.946
	30	.9981	16.350	16.380		30	1.0000	114.589	114.593
	40	.9983	17.169	17.198		40	1.0000	171.885	171.888
	50	.9985	18.075	18.103		50	1.0000	343.774	343.775
					90	00	1.0000	Infinite.	Infinite.

Gas Pipe Screw Threads.

STANDARD DEPTH OF THREAD.

Number of Threads.	Depth of Thread. Inches.
8 to the inch	.0955
10 "	.0787
11½ "	.068
14 "	.054
18 "	.043
27 "	.032

BOILER GRATES.

A good rule for size of grates to burn coal is to make them as wide as the diameter of the boiler, and their length ⅓ of the boiler length. If wood is to be burned add one foot to length of grate.

Standard Proportions for Screw Threads, Nuts and Bolt Heads.

Recommended by the Franklin Institute and adopted by the Master Car Builders' Association.

Angle of thread 60°. Flat at top and bottom = ⅛ of pitch

Screw Threads.				Nuts.				Bolt Heads.			
Diam. of Screws.	Threads per Inch.	Diam. at Root of Thread.	Width of Flat.	Short Diam. Rough.	Short Diam. Finish.	Thickness, Rough.	Thickness, Finish.	Short Diam. Rough.	Short Diam. Finish.	Thickness, Rough.	Thickness. Finish.
In.	No.	In.	In.	In.	In.	In.	In.	In.	In.	In.	In.
¼	20	.185	.0062	½	7/16	¼	3/16	½	7/16	¼	3/16
5/16	18	.240	.0069	19/32	17/32	5/16	¼	19/32	17/32	19/64	¼
⅜	16	.294	.0078	11/16	5/8	⅜	5/16	11/16	5/8	11/32	5/16
7/16	14	.344	.0089	25/32	23/32	7/16	⅜	25/32	23/32	25/64	⅜
½	13	.400	.0096	7/8	13/16	½	7/16	7/8	13/16	7/16	7/16
9/16	12	.454	.0104	31/32	29/32	9/16	½	31/32	29/32	31/64	½
⅝	11	.507	.0113	1 1/16	1	⅝	9/16	1 1/16	1	17/32	9/16
¾	10	.620	.0125	1 ¼	1 3/16	¾	11/16	1 ¼	1 3/16	⅝	11/16
⅞	9	.731	.0138	1 7/16	1 3/8	⅞	13/16	1 7/16	1 3/8	23/32	13/16
1	8	.837	.0156	1 5/8	1 9/16	1	15/16	1 5/8	1 9/16	13/16	15/16
1⅛	7	.940	.0178	1 13/16	1 ¾	1⅛	1 1/16	1 13/16	1 ¾	29/32	1 1/16
1¼	7	1.065	.0178	2	1 15/16	1¼	1 3/16	2	1 15/16	1	1 3/16
1⅜	6	1.160	.0208	2 3/16	2 ⅛	1⅜	1 5/16	2 3/16	2 ⅛	1 3/32	1 5/16
1½	6	1.284	.0208	2 ⅜	2 5/16	1½	1 7/16	2 ⅜	2 5/16	1 3/16	1 7/16
1⅝	5½	1.389	.0227	2 9/16	2½	1⅝	1 9/16	2 9/16	2½	1 9/32	1 9/16
1¾	5	1.490	.0250	2 ¾	2 11/16	1¾	1 11/16	2 ¾	2 11/16	1⅜	1 11/16
1⅞	5	1.615	.0250	2 15/16	2⅞	1⅞	1 13/16	2 15/16	2⅞	1 15/32	1 13/16
2	4½	1.712	.0277	3 1/16	3 1/16	2	1 15/16	3 1/8	3 1/16	1 9/16	1 15/16
2¼	4½	1.962	.0227	3½	3 7/16	2¼	2 3/16	3½	3 7/16	1¾	2 3/16
2½	4	2.175	.0312	3⅞	3 13/16	2½	2 7/16	3⅞	3 13/16	1 15/16	2 7/16
2¾	4	2.425	.0312	4¼	4 3/16	2¾	2 11/16	4¼	4 3/16	2⅛	2 11/16
3	3½	2.629	.0357	4⅝	4 9/16	3	2 15/16	4⅝	4 9/16	2 5/16	2 15/16

Short diameter of rough nut = 1½ × diameter of bolt + ⅛ inch.

Short diameter of finished nut = 1½ × diameter of bolt + $\frac{1}{16}$ inch.

Thickness of rough nut = diameter of bolt.

Thickness finished nut = diameter of bolt — $\frac{1}{16}$ inch.

Short diameter of rough head = 1½ × diameter of bolt + ⅛ inch.

Short diameter of finished head = 1½ × diameter of bolt + $\frac{1}{16}$ inch

Thickness of rough head = ½ short diameter of head.

Thickness of finished head = diameter of bolt — $\frac{1}{16}$ inch.

The long diameter of a hexagon nut = short diameter × 1.155.

The long diameter of a square nut = short diameter × 1.414.

Wood Screws.

Diameter = (Number × 0.01325) + 0.056.

Number = (Diameter — .056) ÷ .01325.

No.	Diam.	No.	Diam.	No.	Diam.	No.	Diam.	No.	Diam.
0	.056	6	.135	12	.215	18	.293	24	.374
1	.069	7	.149	13	.228	19	.308	25	.387
2	.082	8	.162	14	.241	20	.321	26	.401
3	.096	9	.175	15	.255	21	.334	27	.414
4	.109	10	.188	16	.268	22	.347	28	.427
5	.122	11	.201	17	.281	23	.361	29	.440
								30	.453

Needle Slot Stamp Battery Screens.

No.	Width of Slot.	Heaviest Iron Russia Gauge.	Equivalent Bir. Gauge.
	Inches.	No.	No.
1	.047	16	21½
2	.042	16	21½
3	.039	16	21½
4	.036	16	21½
5	.033	16	21½
6	.030	16	21½
7	.027	16	21½
8	.024	15	22½
9	.021	10	26
10	.018	8	28
11	.015	7	29
12	.012	7	29

All needle slots are ½ inch long, and set diagonally unless otherwise ordered.

TWIST DRILLS

Should be ground to an angle of 29 degrees and 30 minutes.

LEAD PIPE.

Three-eighths-inch lead pipe varies from 0.625 to 2⅛ lbs. per foot, and will stand a cold water pressure of from 20 to 30 lbs. per square inch for the thinnest, and from 300 to 400 lbs. for the thickest.

PATENT COLD ROLLED STEEL AND IRON SHAFTING, PISTON RODS, ETC.

Diameter.	Weight Per Foot.	Diameter.	Weight Per Foot.
4½ inch.	54.11	1⅝ inch.	7.06
4 7/16 "	52.62	1 9/16 "	6.52
4¼ "	48.26	1½ "	6.01
4 "	42.75	1 15/32 "	5.60
3 15/16 "	41.04	1 7/16 "	5.52
3¾ "	37.57	1 13/32 "	5.26
3½ "	32.73	1⅜ "	5.05
3 7/16 "	31.58	1 5/16 "	4.61
3⅜ "	30.43	1 17/64 "	4.24
3¼ "	28.22	1 26/100 "	4.20
3 3/16 "	27.16	1¼ "	4.17
3⅛ "	26.09	1 2/10 "	3.86
3 "	24.05	1 3/16 "	3.77
2 15/16 "	23.06	1⅛ "	3.38
2⅞ "	22.09	1 3/32 "	3.20
2 13/16 "	21.15	1 5/64 "	3.11
2¾ "	20.21	1 1/16 "	3.02
2 11/16 "	19.31	1 "	2.68
2⅝ "	18.41	15/16 "	2.35
2 9/16 "	17.55	29/32 "	2.20
2½ "	16.70	⅞ "	2.05
2 7/16 "	15.89	13/16 "	1.77
2⅜ "	15.07	¾ "	1.50
2¼ "	13.52	11/16 "	1.26
2 3/16 "	12.80	⅝ "	1.05
2⅛ "	12.07	9/16 "	.845
2 "	10.69	½ "	.667
1 15/16 "	10.03	15/32 "	.586
1⅞ "	9.39	7/16 "	.511
1 13/16 "	8.78	43/100 "	.506
1¾ "	8.18	⅜ "	.375
1 11/16 "	7.61	5/16 "	.260
		¼ "	.167

THE FIGURE NINE.

A remarkable figure is the 9. Set them down in multiplication, thus:

1×9= 9
2×9=18
3×9=27
4×9=36
5×9=45
6×9=54
7×9=63
8×9=72
9×9=81
10×9=90

Now, do you see in the 10 column that it runs, reading down, 1, 2, 3, 4, 5, 6, 7, 8, 9, and reading up in the unit column it is 1, 2, 3, 4, 5, 6, 7, 8, 9, and another curious fact is that the two columns when added make 9: 1 and 8, 2 and 7, etc.

ARTESIAN, OIL AND SALT WELL TUBING SOCKETS.

Standard Dimensions.

Size.	External Diameter.	Length.	Threads Per Inch of Screw.	Weight of One Socket.
Ins.	Ins.	Ins.	.....	Pounds.
½	1.15	2	14	.30
¾	1.41	2⅛	14	.42
1	1.72	2⅜	11½	.64
1¼	2.15	3¼	11½	1.34
1½	2.43	3¼	11½	1.47
2	2.97	3¾	11½	2.58
2½	3 53	3¾	8	3.50
3	4.10	3¾	8	3.66
3½	4.62	3¾	8	4.50
4	5.15	4⅛	8	7.
4½	5.75	4⅛	8	8.25
5	6.37	4⅝	8	9.60
6	7 37	5¼	8	12.83
7	8.45	6	8	17.75
8	9.43	6¼	8	19.60
9	10.50	6¼	8	23.
10	11.62	6¼	8	28.
12	13.87	6¼	8	42.

UPSET SCREW ENDS FOR ROUND AND SQUARE BARS.

Standard Proportions.

Diam. of Round or Side of Square Bar. Inches.	ROUND BARS.				SQUARE BARS.			
	Diam. of Upset Screw End. Inches.	Diam. of Screw at Root of Thread. Inches.	Threads per Inch No.	Excess of Effective Area of Screw End Over Bar. Per Cent.	Diam. of Upset Screw End. Inches.	Diam. of Screw at Root of Thread. Inches.	Threads per Inch No.	Excess of Effective Area of Screw End Over Bar. Per Cent.
1/2	3/4	.620	10	54	3/4	.620	10	21
9/16	3/4	.620	10	21	7/8	.731	9	33
5/8	7/8	.731	9	37	1	.837	8	41
11/16	1	.837	8	48	1	.837	8	17
3/4	1	.837	8	25	1 1/8	.940	7	23
13/16	1 1/8	.940	7	34	1 1/4	1 065	7	35
7/8	1 1/4	1.065	7	48	1 3/8	1.160	6	38
15/16	1 1/4	1.065	7	29	1 3/8	1.160	6	20
1	1 3/8	1.160	6	35	1 1/2	1.284	6	29
1 1/16	1 3/8	1.160	6	19	1 5/8	1 389	5 1/2	34
1 1/8	1 1/2	1.284	6	30	1 5/8	1.389	5 1/2	20
1 3/16	1 1/2	1.284	6	17	1 3/4	1.490	5	24
1 1/4	1 5/8	1.389	5 1/2	23	1 7/8	1.615	5	31
1 5/16	1 3/4	1.490	5	29	1 7/8	1.615	5	19
1 3/8	1 3/4	1.490	5	18	2	1.712	4 1/2	22
1 7/16	1 7/8	1.615	5	26	2 1/8	1.837	4 1/2	28
1 1/2	2	1.712	4 1/2	30	2 1/8	1.837	4 1/2	18
1 9/16	2	1.712	4 1/2	20	2 1/4	1.962	4 1/2	24
1 5/8	2 1/8	1.837	4 1/2	28	2 3/8	2.087	4 1/2	30
1 11/16	2 1/8	1.837	4 1/2	18	2 3/8	2.087	4 1/2	20
1 3/4	2 1/4	1.962	4 1/2	26	2 1/2	2.175	4	21
1 13/16	2 1/4	1.962	4 1/2	17	2 5/8	2 300	4	26
1 7/8	2 3/8	2.087	4 1/2	24	2 5/8	2.300	4	18
1 15/16	2 1/2	2.175	4	26	2 3/4	2.425	4	23
2	2 1/2	2.175	4	18	2 7/8	2.550	4	28
2 1/16	2 3/8	2.300	4	24	2 7/8	2.550	4	30
2 1/8	2 3/8	2.300	4	17	3	2.629	3 1/2	20
2 3/16	2 3/4	2.425	4	23	3 1/8	2 754	3 1/2	24
2 1/4	2 7/8	2.550	4	28	3 1/8	2.754	3 1/2	18
2 5/16	2 7/8	2.550	4	22	3 1/4	2.879	3 1/2	22

Upset Screw Ends.

(*Continued.*)

Diam. of Round or Side of Square Bar. Inches.	ROUND BARS.				SQUARE BARS.			
	Diam. of Upset Screw End. Inches.	Diam. of Screw at Root of Thread. Inches.	Threads per Inch No.	Excess of Effective Area of Screw End Over Bar. Per Cent.	Diam. of Upset Screw End. Inches.	Diam. of Screw at Root of Thread. Inches.	Threads Per Inch No.	Excess of Effective Area of Screw End Over Bar. Per Cent.
2 3/8	3	2.629	3 1/2	23	3 3/8	3.004	3 1/2	26
2 7/16	3 1/8	2.754	3 1/2	28	3 3/8	3.004	3 1/2	19
2 1/2	3 1/8	2.754	3 1/2	21	3 1/2	3.100	3 1/4	21
2 9/16	3 1/4	2.879	3 1/2	26	3 5/8	3.225	3 1/4	24
2 5/8	3 1/4	2.879	3 1/2	20	3 5/8	3.225	3 1/4	19
2 11/16	3 3/8	3.004	3 1/2	25	3 3/4	3.317	3	20
2 3/4	3 3/8	3.004	3 1/2	19	3 7/8	3.442	3	23
2 13/16	3 1/2	3.100	3 1/4	22	3 7/8	3.442	3	18
2 7/8	3 5/8	3.225	3 1/4	26	4	3.567	3	21
2 15/16	3 5/8	3.225	3 1/4	21	4 1/8	3.692	3	24
3	3 3/4	3.317	3	22	4 1/8	3.692	3	19
3 1/8	3 7/8	3.442	3	21	4 3/8	3.923	2 7/8	24
3 1/4	4	3.567	3	20	4 1/2	4.028	2 3/4	21
3 3/8	4 1/8	3.692	3	20	4 5/8	4.153	2 3/4	19
3 1/2	4 1/4	3.798	2 7/8	18	.....	.....	.....	....
3 5/8	4 1/2	4.028	2 3/4	23	.....	.....	.....	....
3 3/4	4 5/8	4.153	2 3/4	23	.....	.....	.....	....
3 7/8	4 3/4	4.255	2 5/8	21	.....	.....	.....	....

NITROGEN.

A colorless, tasteless, inodorous and uninflammable gas, which constitutes 4/5 of our atmosphere, with the oxygen in which it is not chemically combined, but merely mechanically mingled. An animal placed in it dies from the want of oxygen, and not from any poisonous qualities of the gas.

Lard oil does not volatilize like the mineral oils, but decomposes, or burns, at about 550 to 600 degrees, the operation beginning as low as 450 degrees.

WEIGHTS OF SHEET-IRON SMOKE STACKS, PER FOOT.

Diameter. Inches.	Thickness W. G.	Weight. Per Foot.	Diameter. Inches.	Thickness W. G.	Weight. Per Foot.
10	No.16	7.20	10	No.14	9.40
12	"	8.66	12	"	11.11
14	"	9.58	14	"	13.69
16	"	11.68	16	"	15.00
20	"	13.75	20	"	18.33
22	"	15.00	22	"	20.00
24	"	16 25	24	"	21.66
26	"	17.50	26	"	23.33
28	"	18.75	28	"	25.00
30	"	20.00	30	"	26 66

WEIGHT OF PLATE STEEL, PER SQUARE FOOT.

Inch.	Lbs.	Inch.	Lbs.	Inch.	Lbs.
3/16	7.66	7/16	17.86	3/4	30.60
1/4	10.20	1/2	20.40	7/8	35.70
5/16	12.76	9/16	22.96	1	40.80
3/8	15.30	5/8	25.50	...	.....

WEIGHT OF BAR STEEL, PER FOOT.

SQUARE.		ROUND.		OCTAGON.	
Size.	Lbs.	Size.	Lbs.	Size.	Lbs.
1/8	.05	1/8	.04	1/8	.04
3/16	.12	3/16	.09	3/16	.10
1/4	.21	1/4	.17	1/4	.18
5/16	.33	5/16	.26	5/16	.28
3/8	.48	3/8	.38	3/8	.40
7/16	.65	7/16	.51	7/16	.54
1/2	.85	1/2	.67	1/2	.70
9/16	1.08	9/16	.85	9/16	.89
5/8	1.33	5/8	1.04	5/8	1.10
11/16	1.61	11/16	1.27	11/16	1.33
3/4	1.92	3/4	1.50	3/4	1.58
13/16	2.24	13/16	1.76	13/16	1.83
7/8	2.60	7/8	2.04	7/8	2.16
15/16	3.06	15/16	2.35	15/16	2.48
1	3.40	1	2.67	1	2.82
1 1/8	4.30	1 1/8	3.38	1 1/8	3.56
1 1/4	5.31	1 1/4	4.17	1 1/4	4.40
1 3/8	6.43	1 3/8	5.05	1 3/8	5.32
1 1/2	7.65	1 1/2	6.01	1 1/2	6.34
1 5/8	8.98	1 5/8	7.05	1 5/8	7.32
1 3/4	10.40	1 3/4	8.18	1 3/4	8.64
1 7/8	11.90	1 7/8	9.38	1 7/8	9.92
2	13.60	2	10.71	2	11.28
2 1/8	15.40	2 1/8	12.05	2 1/8	12.71
2 1/4	17.20	2 1/4	13.60	2 1/4	14.24
2 3/8	19.20	2 3/8	15.10	2 3/8	15.88
2 1/2	21.20	2 1/2	16.68	2 1/2	17.65
2 5/8	23.50	2 5/8	18.39	2 5/8	19.45
2 3/4	25.70	2 3/4	20.18	2 3/4	21.28
2 7/8	28.20	2 7/8	22.06	2 7/8	23.28
3	30.60	3	24.10	3	25.36
3 1/8	33.13	3 1/8	26.12	3 1/8	27.50
3 1/4	35.90	3 1/4	28.30	3 1/4	29.28
3 3/8	38.64	3 3/8	30.45	3 3/8	32.10
3 1/2	41.60	3 1/2	32.70	3 1/2	34.56
3 5/8	44.57	3 5/8	35.20	3 5/8	37.05
3 3/4	47.80	3 3/4	37.54	3 3/4	39.68
4	54.40	4	42.72	4	45.12
4 1/4	61.40	4 1/4	48.30	4 1/4	50.84
4 1/2	68.90	4 1/2	54.60	4 1/2	56.96
4 3/4	76.70	4 3/4	60.30	4 3/4	63.52
5	85.00	5	66.80	5	70.60
5 1/4	93 70	5 1/4	73.60	5 1/4	77.80
5 1/2	102.80	5 1/2	80.80	5 1/2	85.15
5 3/4	112.40	5 3/4	88.30	5 3/4	93.12
6	122.40	6	96.10	6	101.45
6 1/2	143.60	6 1/2	113.20	6 1/2	117.12
7	166.40	7	130.80	7	138.24
8	217.60	8	170.88	8	180.48
9	275.60	9	218.40	9	227.84
10	340.00	10	267.20	10	282.40
11	411.20	11	323.00	11	340.60
12	489.60	12	384.40	12	405.80

WEIGHT OF FLAT BAR STEEL, PER FOOT.

	½	⅝	¾	⅞	1	1⅛	1¼	1⅜	1½	1¾	2	2¼	2½	2¾	3	3½	4	5	6	7
1/8	.213	.266	.320	.372	.426	.479	.530	.585	.640	.745	.850	.955	1.07	1.18	1.28	1.49	1.70	2.13	2.56	2.98
3/16	.319	.339	.480	.558	.639	.718	.790	.878	.960	1.12	1.28	1.43	1.60	1.76	1.92	2.24	2.55	3.20	3.83	4.47
¼	.425	.533	.640	.743	.852	.958	1.06	1.17	1.28	1.49	1.70	1.91	2.13	2.34	2.56	2.98	3.40	4.26	5.11	5.96
5/16	.531	.665	.800	.929	1.06	1.20	1.33	1.46	1.60	1.86	2.13	2.39	2.66	2.92	3.19	3.72	4.25	5.32	6.38	7.44
⅜	.638	.798	.960	1.12	1.28	1.43	1.59	1.75	1.91	2.23	2.55	2.87	3.20	3.51	3.83	4.46	5.10	6.40	7.66	8.92
7/16	.744	.931	1.12	1.30	1.49	1.67	1.86	2.05	2.23	2.60	2.98	3.35	3.72	4.09	4.46	5 21	5.95	7.44	8.92	10.40
½	.....	1.07	1.28	1.49	1.70	1.91	2.13	2.34	2.55	2.98	3.40	3.83	4.26	4.68	5.10	5 96	6.80	8.52	10.20	11.90
9/16	.....	1.20	1.44	1.67	1.91	2.15	2.39	2.63	2.87	3.35	3.83	4.30	4.78	5.26	5.74	6.69	7.65	9.56	11.50	13.40
⅝	.....	.....	1.60	1.86	2.12	2.39	2.66	2.92	3.19	3.72	4.26	4.79	5.32	5.86	6.39	7.44	8.52	10.64	12.78	14.90
11/16	.....	.....	1.76	2.04	2.34	2.63	2.92	3.22	3.51	4.09	4.68	5.26	5.84	6 43	7.01	8.18	9.35	11.70	14.00	16.40
¾	.....	.....	.....	2.23	2.55	2.86	3.19	3.50	3.83	4.46	5.10	5.74	6.40	7.02	7.65	8.92	10.20	12.80	15.30	17.90
13/16	.....	.....	.....	2.41	2.76	3.11	3.45	3.80	4.14	4.83	5.53	6.22	6.91	7.60	8.20	9.67	11.10	13.80	16.60	19.30
⅞	.....	.....	.....	.....	2.98	3.34	3.72	4.09	4.46	5.21	5.96	6.70	7.46	8.19	8.94	10.42	11.92	14.92	17.88	20.80
15/16	.....	.....	.....	.....	3.19	3.59	3.98	4.38	4.78	5.58	6.38	7.17	7.97	8.77	9.56	11.20	12.80	15.90	19.10	22.40
1	.....	.....	.....	.....	.....	3.82	4.25	4.68	5.10	5.96	6.80	7.66	8.52	9.36	10.20	11.92	13.60	17.04	20.40	23.80
1⅛	.....	.....	.....	.....	.....	.....	4.78	5.27	5.74	6.71	7.65	8.61	9.59	10 54	11.48	13.41	15.30	19.17	22.95	26.80
1¼	.....	.....	.....	.....	.....	.....	.....	5.85	6.38	7.45	8.50	9.57	10.65	11.71	12.76	14.90	17.00	21.30	25.61	29.76
1½	.....	.....	.....	.....	.....	.....	.....	7.02	7.67	8.94	10.20	11.49	12.78	14.04	15.30	17.88	20.40	25.56	30.60	35.70

TABLE SHOWING SIDES OF SQUARES.

Equal in Area to a Circle of Any Diameter, and Area of Each.

DIAM. OF CIRCLE IN INCHES.	SIDE OF SQUARE IN INCHES.	AREA IN SQUARE INCHES.	DIAM. OF CIRCLE IN INCHES.	SIDE OF SQUARE IN INCHES.	AREA IN SQUARE INCHES.	DIAM. OF CIRCLE IN INCHES.	SIDE OF SQUARE IN INCHES.	AREA IN SQUARE INCHES.
1	.8862	.7854	26	23.0419	530.93	51	45.1976	2042.
2	1.7724	3.1416	27	23.9281	572.56	52	46.0838	2123.
3	2.6587	7.0686	28	24.8144	615.75	53	46.97	2206.
4	3.4549	12.5664	29	25.7006	660.52	54	47.8562	2290.
5	4.4311	19.635	30	26.5868	706.86	55	48.7425	2376.
6	5.3174	28.2744	31	27.473	754.77	56	49.6287	2463.
7	6.2036	38.4846	32	28.3593	804 25	57	50.5149	2552.
8	7.0898	50.2656	33	29.2455	855.30	58	51.4012	2642.
9	7.976	63.6174	34	30.1317	907.9	59	52.2874	2734.
10	8.8623	78.54	35	31.0179	962.12	60	53.1736	2827.
11	9.7485	95.03	36	31.9042	1017.9	61	54.0598	2922.
12	10.6347	113.10	37	32.7904	1075.2	62	54.9061	3019.
13	11.5209	132.73	38	33.6766	1134.1	63	55.8323	3117.
14	12.4072	153.94	39	34.5628	1194.6	64	56.7185	3217.
15	13.2934	176.72	40	35.4491	1256.6	65	57.6047	3318.
16	14.1796	201.06	41	36.3353	1320.3	66	58.491	3421.
17	15.0659	226.98	42	37.2215	1385.4	67	59.3772	3526.
18	15.9521	254.47	43	38.1078	1452.2	68	60.2634	3632.
19	16.8383	283.53	44	38.944	1520.5	69	61.1497	3739.
20	17.7245	314.16	45	39.8802	1590.4	70	62.0359	3848.
21	18.6108	346.36	46	40.7664	1661 9	71	62.9221	3959.
22	19.497	380.13	47	41.6527	1734.9	72	63.8083	4072.
23	20.3832	415.47	48	42.5839	1809.5	73	64.6946	4185.
24	21.2694	452.39	49	43.4251	1885.7	74	65.5808	4301.
25	22.1557	490.88	50	44.3113	1963.5	75	66.467	4418.

Ignition Points of Various Substances.

	Fahr.
Phosphorus ignites at	150 deg.
Sulphur "	500 "
Wood "	800 "
Coal "	1,000 "
Lignite, in the form of dust	150 "
Cannel Coal	200 "
Coking "	250 "
Anthracite	300 "

Weight of a Cubic Foot of Substances.

Names of Substances.	Average Weight. Pounds.
Anthracite, solid, of Pennsylvania	93
" broken, loose	54
" " moderately shaken	58
" heaped bushel, loose	(80)
Ash, American white, dry	38
Asphaltum	87
Brass (Copper and Zinc), cast	504
" rolled	524
Brick, best pressed	150
" common hard	125
" soft, inferior	100

Weight of Substances.—(*Continued.*)

Names of Substances.	Average Weight. Pounds.
Brickwork, pressed brick	140
" ordinary	112
Cement, hydraulic, ground, loose, American, Rosendale	56
" " " " " Louisville	50
" " " " English, Portland	90
Cherry, dry	42
Chestnut, dry	41
Coal, bituminous, solid	84
" " broken, loose	49
" " heaped bushel, loose	(74)
Coke, loose, of good coal	27
" " heaped bushel	(38)
Copper, cast	542
" rolled	548
Earth, common loam, dry, loose	76
" " " " moderately rammed	95
" as a soft flowing mud	108
Ebony, dry	76
Elm, dry	35
Flint	162
Glass, common window	157
Gneiss, common	168
Gold, cast, pure, or 24 carat	1204
" pure, hammered	1217
Granite	170
Gravel, about the same as sand, which see.	
Hemlock, dry	25
Hickory, dry	53
Hornblende, black	203
Ice	58.7
Iron, cast	450
" wrought, purest	485
" " average	480
Ivory	114
Lead	711
Lignum Vitæ, dry	83
Lime, quick, ground, loose, or in small lumps	53
" " " " thoroughly shaken	75
" " " " per struck bushel	(66)
Limestones and marbles	168
" " loose, in irregular fragments	96
Mahogany, Spanish, dry	53
" Honduras, dry	35
Maple, dry	49

Weight of Substances.—*Continued.*

Names of Substances.	Average Weight Pounds.
Marbles, see Limestones.	
Masonry, of granite or limestone, well dressed	165
" " mortar rubble	154
" " dry " (well scabbled)	138
" " sandstone, well dressed	144
Mercury, at 32° Fahrenheit	849
Mica	183
Mortar, hardened	103
Mud, dry, close	80 to 110
" wet, fluid, maximum	120
Oak, live, dry	59
Oak, white, dry	52
" other kinds	32 to 45
Petroleum	55
Pine, white, dry	25
" yellow, Northern	34
" " Southern	45
Platinum	1342
Quartz, common, pure	165
Rosin	69
Salt, coarse, Syracuse, N. Y.	45
" Liverpool, fine, for table use	49
Sand, of pure quartz, dry, loose	90 to 106
" well shaken	99 to 117
" perfectly wet	120 to 140
Sandstone, fit for building	151
Shales, red or black	162
Silver	655
Slate	175
Snow, freshly fallen	5 to 12
" moistened and compacted by rain	15 to 50
Spruce, dry	25
Steel	490
Sulphur	125
Sycamore, dry	37
Tar	62
Tin, cast	459
Turf or Peat, dry, unpressed	20 to 30
Walnut, black, dry	38
Water, pure rain or distilled, at 60° Fahrenheit	62½
" sea	64
Wax, bees	60.5
Zinc or Spelter	437

Green timbers usually weigh from one-fifth to one-half more than dry.

SPLICE JOINTS PER MILE OF TRACK.

Two Bars and Four Bolts and Nuts to Each Joint.

Rails,	20	feet	long,	528	joints.
"	24	"	"	440	"
"	26	"	"	406	"
"	28	"	"	378	"
"	30	"	"	352	"

The length of rails as usually sold is 90 per cent 30 feet long, and 10 per cent 24 to 28 feet long, requiring 357 splice joints per mile.

The average weight of splice joints (complete with 2 bars and 4 bolts and nuts) is as follows:

For rails of	16	to	20	lbs.	per yard,	each joint weighs	5	to	6 lbs.
"	24	"	28	"	"	"	6	"	8 "
"	30	"	35	"	"	"	10	"	12 "
"	30	"	50	"	"	"	12	"	16 "
"	56	"	60	"	"	"	18	"	24 "

STEEL.

Rule for Ascertaining the Weight of Square, Round or Flat Tool Steel by Measurement.

Square Tool Steel, one foot in length. When the dimensions are given in fourths of an inch, square the number of fourths in the size given, and divide the product by 4.5

If given in	eighths,	the divisor is	18.
"	sixteenths,	"	72.
"	thirty-seconds,	"	288.
"	sixty-fourths,	"	1152.

Round Tool Steel, one foot in length. When the dimensions are given in fourths of an inch, square the number of fourths in the diameter, and divide the product by ..... 6.

If given in	eighths,	the divisor is	24.
"	sixteenths,	"	96.
"	thirty-seconds,	"	384.
"	sixty-fourths,	"	1536.

Flat Tool Steel, one foot in length. When the dimensions are given in fourths of an inch, multiply the width by the thickness in fourths, and divide the product by 4.5

If given in	eighths,	the divisor is	18.
"	sixteenths,	"	72.
"	thirty-seconds,	"	288.
"	sixty-fourths,	"	1152.

To find the weight of steel, wrought, and cast iron, by measurement.

RULE: Find the number of cubic inches in the bar, or piece, and multiply by .285 for steel, .28 for wrought iron, and .26 for cast iron.

STANDARD FILE STEEL SIZES.

SIZE OF FILE IN INCHES.	SIZE OF STEEL.		
	SQUARE AND ROUND.	FLAT.	MILL.
3 in.	1/8 in.	5/16 × 14 gauge.	11/32 × 16 gauge.
4 "	5/32 "	7/16 × 12 "	7/16 × 14 "
5 "	3/16 "	17/32 × 10 "	17/32 × 13 "
6 "	7/32 "	5/8 × 8 "	5/8 × 11 "
7 "	1/4 "	23/32 × 7 "	23/32 × 10 "
8 "	19/64 "	13/16 × 6 "	13/16 × 9 "
9 "	11/32 "	29/32 × 5 "	29/32 × 8 "
10 "	3/8 "	1 × 1/4 in.	1 × 3/16 in.
11 "	7/16 "	1 3/32 × 2 gauge.	1 3/32 × 13/64 in.
12 "	1/2 "	1 3/16 × 19/64 in.	1 3/16 × 7/32 in.
13 "	9/16 "	1 9/32 × 21/64 "	1 9/32 × 4 gauge.
14 "	5/8 "	1 23/64 × 11/32 "	1 23/64 × 3 "
15 "	11/16 "	1 7/16 × 3/8 "	1 7/16 × 2 " scant.
16 "	3/4 "	1 17/32 × 25/64 "	1 17/32 × 2 " full
17 "	13/16 "	1 5/8 × 13/32 "	1 5/8 × 1 "
18 "	7/8 "	1 23/32 × 7/16 "	1 23/32 × 1 " full.
19 "	15/16 "	1 13/16 × 29/64 "	1 13/16 × 3/8 in.
20 "	1 "	1 29/32 × 15/32 "	1 29/32 × 7/16 "

Standard File Steel Sizes.

SIZE OF FILE.	SIZE OF STEEL.		
	HALF ROUND.	TAPER.	HORSE RASP.
3 in.	5/16 × 13 gauge.	15/64 Δ	
3½"		19/64 "	
4 "	7/16 × 11 "	3/8 "	
4½"		13/32 "	
5 "	17/32 × 9 "	7/16 "	
5½"		15/32 "	
6 "	5/8 × 7 "	1/2 "	
6½"		17/32 "	
7 "	23/32 × 6 "	9/16 "	
8 "	13/16 × 4 "	41/64 "	
9 "	29/32 × 3 "	45/64 "	
10 "	1 × 9/32 in.	49/64 "	1 7/64 × 15/64 in.
11 "	1 7/64 × 5/16 "	27/32 "	1 13/64 × 17/64 "
12 "	1 3/16 × 11/32 "	29/32 "	1 5/16 × 9/32 "
13 "	1 19/64 × 3/8 " scant.	31/32 "	1 25/64 × 19/64 "
14 "	1 25/64 × 25/64 "	1 1/32 "	1 1/2 × 21/64 "
15 "	1 31/64 × 27/64 "	1 7/64 "	1 19/32 × 11/32 "
16 "	1 37/64 × 29/64 "	1 11/64 "	1 11/16 × 23/64 "
17 "	1 43/64 × 31/64 "		1 49/64 × 25/64 "
18 "	1 49/64 × 1/2 "		1 7/8 × 13/32 "
19 "	1 7/8 × 17/32 "		1 15/16 × 27/64 "
20 "	2 × 9/16 "		2 × 7/16 "

TEMPERING STEEL.

TEMPERATURE.	COLOR.	USE.
482° Fahr.	Pale yellow.	Surgical instruments.
446° "	Straw.	Penknives, razors, wood tools.
491° "	Brown yellow.	Chisels and scissors.
509° "	Purplish	Axles, heavy knives.
527° "	Purple.	Table knives, springs.
534° "	Pale blue.	Watch springs, swords.
563° "	Dark blue.	Fine saws, drills.
600° "	Very dark blue.	Hand saws.
662° "	Very dark blue, vergin or green.	Too soft for any ordinary tools.

Bath for Hardening Steel.

To 170 gallons of water, add ½ pint oil of vitriol, ½ pound of alum, ¼ pound of borax, ¼ pound prussiate of potash. Add sufficient salt to make a potato float on the water.

Do not heat steel too highly, and dip vertically.

Directions for Scaling Sheet Steel.

Fill a vat with warm water to about 120 degrees Fahr., and add sulphuric acid until it boils up.

Agitate the sheets in this bath until they are free from scale, then rinse them in two clean cold water baths.

Lastly, pass the sheets through lime water boiling hot.

Crucible Cast Steel.

Commonly called Tool Steel—contains carbon as follows:

Razor Temper, 1½ per cent of carbon.

Turning Tool Temper, 1¼ per cent of carbon.

Punch Temper, 1⅛ per cent of carbon.

Chisel Temper, 1 per cent of carbon.

Sett Temper, ⅞ per cent of carbon.

Die Temper, ¾ per cent of carbon.

Mushet Steel.

It is said that Mushet Steel can be annealed by heating it up thoroughly to a light yellow—just short of burning—and then burying it in hot ashes, or in perfectly dry lime so as to exclude the air, and leaving it there until cold.

To harden it again: Heat as before, and suspend in cold air. It *must not* be brought in contact with water, whether it be warm or cold.

Distances in Feet Which Sound Travels in Air.

Time of Travel.	Temperature of the Air, Fahrenheit.				
Seconds.	50° Feet.	60° Feet.	70° Feet.	80° Feet.	90° Feet.
1	1,109.6	1,120.6	1,131.1	1,142.5	1,153.2
2	2,219.2	2,241.2	2,262.2	2,885.0	2,306.4
3	3,328.8	3,361.8	3,393.3	3,427.5	3,459.6
4	4,438.4	4,482.4	4,524.4	4,570.0	4,612.8
5	5,548.0	5,603.0	5,655.5	5,712.5	5,766.0
6	6,657.6	6,723.6	6,786.6	6,855.0	6,919.2
7	7,767.2	7,844.2	7,917.7	7,997.5	8,072.4
8	8,876.8	8,964.8	9,048.8	9,140.0	9,225.6

Screw Cutting.

To set compound gears.

Rule: Divide the number of threads per inch to be cut by the number of threads per inch on the lead screw. The quotient will be the proportional number.

Select a gear for mandrel, and also one for smaller wheel of compounded pair, and multiply them together; then multiply the product thus found by the proportional number.

Select another gear for larger wheel of compounded pair and divide it into the above product, and the quotient will give the wheel to be placed upon the lead screw. Judgment must be used in selecting the mandrel wheel and wheels of compounded pair, as the thread to be cut is either coarser or finer than pitch of lead screw.

Weights of Stone per Cubic Foot.

Limestone from 120 to 185 pounds.

Sandstone from 120 to 170 pounds.

1 cubic yard of solid stone work makes 1⅛ cubic yards of broken rock.

Average Crushing Loads on Stone, in Tons, per Square Foot.

Limestone and Marble	625 Tons.
Sandstone	350 "
Brick	170 "
Portland Cement	112 "
Concrete, fresh	15 "
" six months	60 "
" 12 "	95 "
Rubble Masonry in Mortar	35 "

Rubble masonry work will average about 175 pounds to the cubic foot, ¼ being considered mortar, leaving the weight of rock about 130 pounds per foot.

Ordinary rubble work will average about 130 pounds per foot.

A perch of limestone rock will weigh about 2,150 pounds.

NUMBER OF BARRELS (31½ GALLONS) CONTAINED IN CISTERNS AND TANKS.

Diameter in Feet.	DEPTH IN FEET.															
	5	6	7	8	9	10	11	12	13	14	15	16	17	18	19	20
5	23.3	28.0	32.7	37.3	42.0	46.7	51.3	56.0	60.7	65.3	70.0	74.7	79.3	84.0	88.7	93.3
6	33.6	40.3	47.0	53.7	60.4	67.1	73.9	80.6	87.3	94.0	100.7	107.4	114.1	120.9	127.6	134.3
7	45.7	54.8	64.0	73.1	82.2	91.4	100.5	109.7	118.8	127.9	137.1	146.2	155.4	164.5	173.6	182.8
8	59.7	71.7	83.6	95.5	107.4	119.4	131.3	143.2	155.2	167.1	179.0	191.0	202.9	214.8	226.8	238.7
9	75.5	90.6	105.7	120.9	136.	151.1	166.2	181.3	196.4	211.5	226.6	241.7	256.8	272.0	287.0	302.1
10	93.2	111.9	130.6	149.2	167.9	186.5	205.1	223.8	242.4	261.1	289.8	298.4	317.0	335.7	354.3	373.0
11	112.8	135.4	158.0	180.5	203.1	225.7	248.2	270.8	293.4	315.9	338.5	361.1	383.6	406.2	428.8	451.3
12	134.3	161.1	188.0	214.8	241.7	268.6	295.4	322.3	349.1	376.0	402.8	429.7	456.6	483.4	510.3	537.1
13	157.6	189.1	220.6	252.1	283.7	315.2	346.7	378.2	409.7	441.3	472.8	504.3	535.8	567.3	593.	630.4
14	182.8	219.3	255.9	292.4	329.0	365.5	402.1	438.6	475.2	511.8	548.3	584.9	621.4	658.0	694.5	731.1
15	209.8	251.8	293.7	335.7	377.7	419.6	461.6	503.5	545.5	587.5	629.4	671.4	713.4	755.3	797.3	839.3
16	238.7	286.5	334.2	382.0	429.7	477.4	525.2	572.9	620.7	668.2	716.2	773.9	811.6	859.4	907.1	954.9
17	269.5	323.4	377.3	431.2	485.1	539.	592.9	646.8	700.7	754.6	808.5	862.4	916.3	970.2	1024.1	1078.
18	302.1	362.6	423.	483.4	543.8	604.3	667.7	725.1	785.5	846.0	906.4	966.8	1027.2	1087.7	1148.1	1208.5
19	336.6	404.	471.3	538.6	605.9	673.3	740.6	807.9	875.2	942.6	1009.9	1077.3	1144.6	1211.9	1279.2	1346.5
20	373.	447.6	522.2	596.8	671.4	746.0	820.6	895.2	969.8	1044.4	1119.0	1193.6	1268.2	1342.8	1417.4	1492.0
21	411.2	493.5	575.7	658.0	740.2	822.5	904.7	987.0	1069.2	1151.5	1233.7	1315.9	1398.2	1480.4	1562.7	1644.9
22	451.3	541.6	631.9	722.1	812.4	902.7	992.9	1083.2	1173.5	1263.7	1354.0	1444.3	1534.5	1624.8	1715.1	1805.3
23	493.3	592.0	690.6	789.3	887.9	986.6	1085.2	1183.9	1282.6	1381.2	1479.9	1578.5	1677.2	1775.9	1874.5	1973.2
24	537.1	644.5	752.0	859.4	966.8	1074.2	1181.7	1289.1	1396.5	1503.9	1611.4	1718.8	1826.2	1933.6	2041.1	2148.5
25	582.8	699.4	815.9	932.5	1049.1	1165.6	1282.2	1398.7	1515.3	1631.9	1748.4	1865.0	1981.6	2098.1	2214.7	2321.2
26	630.4	756.5	882.5	1008.6	1134.7	1260.8	1386.8	1512.9	1639.	1765.1	1891.1	2017.2	2143.3	2269.4	2395.4	2521.5
27	679.8	815.8	951.7	1087.7	1223.6	1359.6	1495.6	1631.5	1767.5	1903.4	2039.4	2175.4	2311.3	2447.3	2583.2	2719.2
28	731.1	877.3	1023.5	1169.7	1316.0	1462.2	1608.7	1754.6	1900.8	2047.1	2193.3	2339.5	2485.7	2631.9	2778.1	2924.4
29	784.2	941.1	1097.9	1254.8	1411.6	1568.5	1725.3	1882.2	2039.0	2195.9	2352.7	2509.6	2666.4	2823.3	2980.1	3137.0
30	839.3	1007.1	1175.0	1342.8	1510.7	1678.5	1846.4	2014.2	2182.0	2343.9	2517.8	2685.6	2853.5	3021.3	3189.2	3357.0

For tanks that are tapering, measure the diameter $\frac{4}{10}$th from the large end.

SIZE OF TANKS.

Table Showing the Number of Gallons in Cisterns and Tanks.

Depth in Feet.	DIAMETER IN FEET.																	Depth in Feet.
	5	6	7	8	9	10	11	12	13	14	15	16	18	20	22	24	25	
5	725	1060	1440	1875	2380	2925	3550	4237	4960	5765	6698	7520	9516	11750	14215	16918	18358	5
6	870	1270	1728	2250	2855	3510	4260	5084	5952	6918	8038	9024	11419	14100	17059	20302	22030	6
7	1015	1480	2016	2625	3330	4095	4970	5931	6944	8071	9378	10528	13322	16450	19902	23680	25701	7
8	1160	1690	2304	3000	3805	4680	5680	6778	7936	9224	10718	12032	15225	18800	22745	27070	29372	8
9	1305	1900	2592	3375	4280	5265	6390	7625	8928	10377	12058	13536	17128	21150	25588	30454	33043	9
10	1450	2110	2880	3750	4755	5850	7100	8472	9920	11530	13398	15040	19031	23500	28431	33838	36714	10
11	1595	2320	3168	4125	5230	6435	7810	9319	10912	12683	14738	16544	20934	25850	31274	37222	40385	11
12	1740	2530	3456	4500	5705	7020	8520	10166	11904	13836	16078	18048	22837	28200	34117	40606	44056	12
13	1885	2740	3744	4875	6180	7605	9230	11013	12896	14989	17418	19552	24740	30550	36960	43990	47727	13
14	2060	2950	4032	5250	6655	8190	9940	11860	13888	16142	18758	21056	26643	32900	39803	47374	51398	14
15	2175	3160	4320	5625	7130	8775	10650	12707	14880	17295	20098	22260	28546	35250	42646	50758	55069	15
16	2320	3370	4608	6000	7605	9360	11360	13554	15872	18448	21438	24064	30449	37600	45489	54142	58740	16
17	2465	3580	4896	6375	8080	9945	12070	14401	16864	19601	22778	25568	32352	39950	48332	57520	62411	17
18	2610	3790	5184	6750	8535	10530	12780	15248	17856	20754	24118	27072	34255	42300	51175	60910	66082	18
19	2755	4000	5472	7125	9010	11115	13490	16095	18848	21907	25458	28576	36158	44650	54018	64294	69753	19
20	2900	4210	5760	7500	9490	11700	14200	16942	19840	23060	26798	30080	38062	47000	56861	67678	73424	20

For tanks that are tapering, measure the diameter four-tenths from the large end.

TACKS.

Title.	Length.	No. per Lb.	Title.	Length.	No. per Lb.
1 oz.	⅛ inch.	16,000	10 oz.	11-16 inch.	1,600
1½ "	3-16 "	10,666	12 "	¾ "	1,333
2 "	¼ "	8,000	14 "	13-16 "	1,143
2½ "	5-16 "	6,400	16 "	⅞ "	1,000
3 "	⅜ "	5,333	18 "	15-16 "	888
4 "	7-16 "	4,000	20 "	1 "	800
6 "	9-16 "	2,666	22 "	1 1-16 "	727
8 "	⅝ "	2,000	24 "	1⅛ "	666

RELATIVE DIMENSIONS OF TYPE.

Pica has..... 72 lines to the foot.
Long Primer..... 90 " "
Brevier.....112 " "
Nonpareil.....144 " "

These figures are not absolutely correct, but are an average of the bodies of the various typefounders, and accurate enough for all practical purposes.

STONE WELL TUBING.

Vitrified and salt-glazed, without socket, in 2 and 3-foot lengths.

Diameter.		Weight.
6-inch bore,	8-inch outside.	15 pounds.
8 "	10 "	20 "
9 "	11 "	25 "
10 "	12 "	30 "
12 "	15 "	45 "
15 "	18 "	60 "
18 "	21 "	80 "

TO FIND SOLIDITY OF TIMBER.

ROUND TIMBER.

When all the dimensions are in feet.

Length multiplied by square of ¼ of mean girth equal cubic feet.

When length in feet, girth in inches.

Multiply as above, and divide by 144.

When all dimensions are in inches.

Multiply as above, and divide by 1728.

SQUARE TIMBER.

When all dimensions are in feet.

Length multiplied by breadth multiplied by depth, equal cubic feet.

When either dimensions are in inches.

Multiply as above, and divide by 12.

When any two of the dimensions are in inches.

Multiply as above, and divide by 144.

Or use the following table as shown at foot of same.

TABLE ONE-FOURTH GIRTHS.

¼ Girth in ins.	Area in Feet.	¼ Girth in ins.	Area in Feet.	¼ Girth in Ins.	Area in Feet.	¼ Girth in Ins.	Area in Feet.
6	.250	10¾	.803	15½	1.66	22½	3.51
¼	.272	11	.840	¾	1.72	23	3.67
½	.294	¼	.878	16	1.77	½	3.83
¾	.317	½	.918	¼	1.83	24	4.00
7	.340	¾	.959	½	1.89	½	4.16
¼	.364	12	1.000	¾	1.94	25	4.34
½	.390	¼	1.04	17	2.00	½	4.51
¾	.417	½	1.08	¼	2.06	26	4.69
8	.444	¾	1.12	½	2.12	½	4.87
¼	.472	13	1.17	¾	2.18	27	5.06
½	.501	¼	1.20	18	2.25	½	5.25
¾	.531	½	1.26	½	2.37	28	5.44
9	.562	¾	1.31	19	2.50	½	5.64
¼	.594	14	1.36	½	2.64	29	5.84
½	.626	¼	1.41	20	2.77	½	6.04
¾	.659	½	1.46	½	2.91	30	6.25
10	.694	¾	1.51	21	3.06		
¼	.730	15	1.56	½	3.20		
½	.766	¼	1.61	22	3.36		

Area corresponding to the ¼ girth in inches multiplied by length in feet gives solidity in feet and decimal parts for either square or round timber.

In Round Timber take the *mean* girth. Square Timber take the side, which in practice corresponds with ¼ of the girth of Round Timber.

To Obtain the Volume, in Cubic Feet, of a Tapering Stick of Squared Timber.

RULE: Add together the areas of the end and four times the area of the section at the middle of its length, measured in square feet, and multiply the sum by one-sixth the length of the stick.

The result divided by 12 will give the contents in feet, in board measure.

TABLE SHOWING NUMBER OF FEET IN BILL STUFF AND TIMBER.

Size.	12	14		16		18	20		22		24	26		28		30	32		34		36	38		40	
	Ft.	Ft.	In.	Ft.	In.	Ft.	Ft.	In.	Ft.	In.	Ft.	Ft.	In.	Ft.	In.	Ft.	Ft.	In.	Ft.	In.	Ft.	Ft.	In.	Ft.	In.
2x 4	8	9	4	10	8	12	13	4	14	8	16	17	4	18	8	20	21	4	22	8	24	25	4	26	8
2x 6	12	14		16		18	20		22		24	26		28		30	32		34		36	38		40	
2x 8	16	18	8	21	4	24	26	8	29	4	22	34	8	37	4	40	42	8	45	4	48	50	8	53	4
2x10	20	23	4	26	8	30	33	4	36	8	40	43	4	46	8	50	53	4	56	8	60	63	4	66	8
2x12	24	28		32		36	40		44		48	52		56		60	64		68		72	76		80	
2x14	28	32	8	37	4	42	46	8	51	4	56	60	8	65	4	70	74	8	79	4	84	88	8	93	4
3x 4	12	14		16		18	20		22		24	26		28		30	32		34		36	38		40	
3x 6	18	21		24		27	30		33		36	39		42		45	48		51		54	57		60	
3x 8	24	28		32		36	40		44		48	52		56		60	64		68		72	76		80	
3x10	30	35		40		45	50		55		60	65		70		75	80		85		90	95		100	
3x12	36	42		48		54	60		66		72	78		84		90	96		102		108	114		120	
3x14	42	49		56		63	70		77		84	91		98		105	112		119		126	133		140	
3x16	48	56		64		72	80		88		96	104		112		120	128		136		144	152		160	
4x 4	16	18	8	21	4	24	26	8	29	4	32	34	8	37	4	40	42	8	45	4	48	50	8	53	4
4x 6	24	28		32		36	40		44		48	52		56		60	64		68		72	76		80	
4x 8	32	37	4	42	8	48	53	4	58	8	64	69	4	74	8	80	85	4	90	8	96	101	4	106	8
6x 6	36	42		48		54	60		66		72	78		84		90	96		102		108	114		120	
6x 8	48	56		64		72	80		88		96	104		112		120	128		136		144	152		160	
6x10	60	70		80		90	100		110		120	130		140		150	160		170		180	190		200	
6x12	72	84		96		108	120		132		144	156		168		180	192		204		216	228		240	
8x 8	64	74	8	85	4	96	106	8	117	4	128	138	8	149	4	160	170	8	181	4	192	202	8	213	
8x10	80	93	4	106	8	120	133	4	146	8	160	163	4	176	8	190	203	4	216	8	240	253	4	266	
8x12	96	112		128		144	160		176		192	208		224		240	256		272		288	304		320	
10x10	100	116	8	133	4	150	166	8	183	4	200	216	8	233	4	250	266	8	283	4	300	316	8	333	4
10x12	120	140		160		180	200		220		240	260		280		300	320		340		360	380		400	
12x12	144	168		192		216	240		264		288	312		336		360	384		408		432	456		480	

Board Measure of Timber.

Dimensions in Inches.	No. of Feet B. M. per Linear Foot.	Dimensions in Inches.	No. of Feet B. M. per Linear Foot.
2 × 6	1	7 × 16	9⅓
2 × 8	1⅓	8 × 8	5⅓
2 × 10	1⅔	8 × 10	6⅔
2 × 12	2	8 × 12	8
2 × 14	2⅓	8 × 14	9⅓
3 × 6	1½	8 × 16	10⅔
3 × 8	2	10 × 10	8⅓
3 × 10	2½	10 × 12	10
3 × 12	3	10 × 14	11⅔
3 × 14	3½	10 × 16	13⅓
4 × 6	2	12 × 12	12
4 × 8	2⅔	12 × 14	14
4 × 10	3⅓	12 × 15	15
4 × 12	4	12 × 16	16
4 × 14	4⅔	12 × 18	18
4 × 16	5⅓	14 × 14	16⅓
6 × 6	3	14 × 16	18⅔
6 × 8	4	14 × 18	21
6 × 10	5	16 × 16	21⅓
6 × 12	6	16 × 18	24
6 × 14	7	18 × 18	27
6 × 16	8	18 × 20	30
7 × 7	4 1/12	20 × 20	33⅓
7 × 9	5¼	24 × 24	48

To ascertain the contents of a stick, multiply the length by the number of feet opposite the dimension in the above table.

AVERAGE WEIGHT AND AREA OF DRAIN TILE.

Size in Inch. Diameter Inside.	Weight per Foot.	No. Car Load.	Area Decimally Ex.
3 inches.	5 Lbs.	Divide capacity of car by weight of tile to be loaded. Capacity of car usually 20,000 to 40,000 pounds.	6.9 in.
4 "	7 "		12.33 "
5 "	9 "		19.6 "
6 "	11 "		28.27 "
7 "	14 "		38.46 "
8 "	17 "		50.26 "
10 "	22 "		78.54 "
12 "	23½ "		113.09 "
15 "	50 "		176.77 "
18 "	65 "		254.65 "

Carrying Capacity of Tile.

When the number of acres to be drained, and grade of drain is known it is easy to determine the size of the tile required by the following table, which shows the number of gallons discharged per minute, for specified sizes and grades:

CARRYING CAPACITY—GALLONS PER MINUTE.

Size of Tile, Diameter Inside.	1 Inch Fall per 100 Feet.	2 Inch Fall per 100 Feet.	3 Inch Fall per 100 Feet.	6 Inch Fall per 100 Feet.	9 Inch Fall per 100 Feet.	1 Foot Fall per 100 Feet.	2 Foot Fall per 100 Feet.	3 Foot Fall per 100 Feet.
3 Inch	13	19	23	32	40	46	64	79
4 "	27	38	47	66	81	93	131	163
6 "	75	105	129	183	224	258	364	450
8 "	153	216	265	375	460	529	750	923
9 "	205	290	355	593	617	711	1006	1240
10 "	267	378	463	655	803	926	1310	1613
12 "	422	596	730	1033	1273	1468	2076	2554
15 "	740	1021	1282	1818	2224	2464	3617	4467
18 "	1168	1651	2022	2860	3508	4045	5704	7047
24 "	2396	3387	4153	5871	7202	8303	11744	14466
30 "	4187	5920	7252	10257	12580	14504	20516	25257

Statistics show the maximum rain fall to be about one inch per hour, except during very heavy and uncommon storms.

One inch rain fall per hour gives 22,633 gallons per hour for each acre, or 377 gallons per minute per acre.

Drain Tiles are 12 inches long.

Weight of Brazed Copper Tubes,

(PER RUNNING FOOT, IN POUNDS.)

Diam. Inch.	Thickness in Inches.						Diam. Inch.	Thickness in Inches.					
	1/16	1/8	3/16	1/4	5/16	7/16		1/16	1/8	3/16	1/4	5/16	7/16
1	.8	1.2	1.7	2.7	3.8	4.9	3	2.3	3.5	4.7	7.3	9.9	12.5
1¼	1.	1.5	2.1	3.3	4.5	6.	3½	2.7	4.	5.5	8.4	11.4	14.4
1½	1.2	1.8	2.5	3.8	5.3	6.9	4	3.	4 6	6.3	9.5	12.9	16.3
1¾	1.4	2.1	2 8	4.4	6.	7.8	4½	3.4	5.2	7.	10.7	14.4	18.2
2	1.5	2.4	3.2	4.9	6.8	8.7	5	3.8	5.7	7.8	11.8	16.	20.1
2¼	1.8	2.6	3.6	5.5	7.6	9.7	5½	4.2	6.3	8.5	13.1	17.5	22.5
2½	1.9	2.9	4.	6.1	8.4	10.6	6	4.6	6.8	9.3	14.1	19.	23.9
2¾	2.1	3.2	4.4	6.7	9.1	11.7							

Brass and Bronze Brazed Tubing—Brown & Sharpe's Gauge.

OUTSIDE DIAMETERS.

Round, plain,	from	1/8	inch	to	3	inch	—	No.	17
" " "	"	7/16	"	"	1¾	"	—	"	22
Square, "	"	5/16	"	"	1¼	"	—	"	17
" " "	"	7/16	"	"	9/16	"	—	"	22
Round, rope,	"	5/16	"	"	1	"	—	"	17
" " "	"	5/8	"	"	1¼	"	—	"	22
" cable,	"	5/8	"	"	1	"	—	"	17
Square, twisted	"	5/8	"	"	1	"	—	"	17
" " "	"	5/8	"	"	1¼	"	—	"	22

Table of Weights per Lineal Foot of Seamless Brass and Copper Tubing.

IRON PIPE SIZES.

Outside Diameter.	Same as Iron Size.	WEIGHT PER FOOT.	
		Brass.	Copper.
		Lbs.	Lbs.
13/32	1/8″	.32	.33
9/16	1/4″	.43	.44
11/16	3/8″	.58	.60
13/16	1/2″	.81	.85
1 1/16	3/4″	1.19	1.25
1 5/16	1 ″	1.66	1.74
1 5/8	1¼″	2.42	2.54
1 7/8	1½″	2.92	3.07
2 3/8	2 ″	3.90	4.09
2 7/8	2½″	5.14	5.41
3½	3 ″	8.08	8.50
4	3½″	10.20	10.60
4½	4 ″	12.70	13.30
5½	5 ″	16.00	16.80
6½	6 ″	18.00	18.90

HYDROGEN.

A gas which, combined with oxygen, in the proportion of 1 part by weight of hydrogen, to 8 parts of oxygen, produces water. It is colorless, tasteless, inodorous, inflammable, and will not support animal life. Its specific gravity as compared with common air is as 69 to 1,000, and is exactly sixteen times lighter than oxygen.

Seamless Drawn Brass and Copper Tubing, for Locomotive, Stationary and Marine Boilers, and Many Other Purposes.

LIST OF STANDARD SIZES, WEIGHTS, ETC., OF SEAMLESS DRAWN TUBING.

Outside Diam.	B.&S. Gauge	Stubs' Gauge	WT. PER FOOT		Outside Diam.	B.&S. Gauge	Stubs' Guage	WT. PER FOOT.	
			Brass.	Cop'r.				Brass.	Copper.
			Lbs.	Lbs.				Lbs.	Lbs.
⅛	20	21			1⅝	12	14	1.65	1.74
3/16	20	21			1¾	11	13	1.79	1.88
¼	17	19	.11	.12	2	11	13	2.10	2.21
5/16	17	19	.15	.16	2¼	10	12	2.71	2.85
⅜	17	19	.18	.19	2½	10	12	3.02	3.18
7/16	17	19	.23	.24	2¾	10	12	3.33	3.51
½	16	18	.27	.29	3	9	11	4.01	4.22
9/16	16	18	.30	.32	3¼	8	10	4.94	5.20
⅝	16	18	.33	.35	3½	8	10	5.35	5.63
¾	15	17	.46	.49	4	8	10	6.14	6.46
⅞	15	17	.53	.58	4¼	8	10	6.52	6.86
1	14	16	.67	.71	4½	8	10	6.92	7.28
1⅛	14	16	.76	.80	4¾	8	10	7.30	7.68
1¼	13	15	.97	1.02	5	8	10	7.67	8.08
1⅜	12	14	1.22	1.29	6	8	10	9.31	9.79
1½	12	14	1.36	1.44	6⅜	5	7	12.93	13.60

Seamless Copper Tubes for Coppersmiths' Use.

ALL NO. 14 STUBS' GAUGE.

Outside Diameter.	Weight per Foot.	Inside Diameter.	Weight per Foot
2 inch.	1.94		
2½ "	2.45	2	2.09
3 "	2.95	2½	2.60
3½ "	3.46	3	3.08
4 "	3.97	3½	3.60
5 "	4.98	4	4.13
6 "	5.99		

Boiler Tubes.

To find the internal bursting pressure of boiler tubes.

RULE: Multiply the tensile strength of the material of the tube per square inch in pounds by twice the thickness of the tube in inches, or parts of an inch. Divide this product by the diameter of the tube in inches, and the quotient will be the bursting pressure. This rule applies to short tubes. For long tubes the bursting pressure is less.

TABLE OF WEIGHTS PER LINEAL FOOT OF SEAMLESS BRASS TUBING.

3-16 to 6 inch Outside Diameter. Nos. 8 to 25 Stubs' Gauge.

To Ascertain the Weight of Seamless Copper Tubing, add 5 per cent to the Weight of Brass Tubing.

Stubs' Gauge.	3-16	¼	5-16	3-8	7-16	½	9-16	⅝	¾	⅞	1	1¼	1½	1¾	2	2¼	2½	2¾	3	3¼	3½	3¾	4	4¼	4½	4¾	5	5¼	5½	5¾	6
8	....	....	....	.40	.52	.64	.77	.87	1.11	1.35	1.59	2.07	2.54	3.02	3.50	3.98	4.46	4.93	5.41	5.89	6.37	6.84	7.32	7.79	8.27	8.75	9 23	9.70	10.18	10 65	11.14
9	....	....	....	.39	.49	.61	.71	.82	1.04	1.25	1.46	1.89	2.32	2.75	3.17	3.60	4.03	4.45	4.88	5.31	5.73	6.16	6.59	7.02	7.44	7.88	8.30	8.73	9.15	9.58	9.99
10	....	....	....	.38	.46	.58	.65	.77	.96	1.16	1.35	1.74	2.12	2.51	2.90	3.28	3.67	4.06	4.45	4.84	5.22	5.59	5.98	6.38	6 77	7.15	7.55	7.92	8.31	8.70	9.10
11	....	.18	.26	.36	.43	.53	.61	.70	.87	1.05	1.22	1.57	1.91	2.27	2.60	2.96	3.31	3.65	4.00	4.34	4.69	5.04	5.38	5.73	6.08	6.43	6.77	7.12	7.46	7.81	8.16
12	....	.177	.256	.334	.413	.491	.570	.650	.808	.965	1.12	1.43	1.76	2.07	2.39	2.70	3.01	3.33	3.64	3.96	4.27	4.59	4.90	5.22	5.54	5.85	6.16	6.49	6.79	7.12	7.42
13	....	.170	.237	.306	.377	.445	.514	.580	.717	.855	1.00	1.27	1.55	1.82	2.09	2.37	2.65	2.92	3.20	3.47	3.73	4.02	4.29	4.57	4.84	5.12	5.40	5.66	5.94	6.21	6.49
14	....	.160	.220	.280	.340	.400	.460	.520	.640	.760	.88	1.12	1.36	1.61	1.84	2.08	2.32	2.57	2.80	3.04	3.27	3.51	3.76	3.99	4.23	4.48	4.71	4.96	5.20	5.44	5.67
15	.096	.144	.201	.251	.303	.355	.409	.461	.564	.667	.77	.99	1.19	1.40	1.61	1.81	2.02	2.22	2.43	2.64	2.85	3.06	3.26	3.48	3.69	3.89	4.10	4.30	4.51	4.72	4.93
16	.092	.138	.186	.232	.279	.326	.372	.420	.515	.609	.70	.89	1.07	1.26	1.45	1.64	1.82	2.01	2.20	2.39	2.58	2 77	2.96	3.14	3.33	3.52	3.71	3.89	4.08	4.27	4.46
17	.087	.128	.169	.212	.255	.295	.338	.380	.463	.548	.64	.80	.97	1.14	1.30	1.48	1.64	1.81	1.97	2.15	2.31	2.47	2.64	2.81	2.98	3.14	3.31	3.49	3.65	3.81	3.98
18	.078	.113	.150	.183	.220	.255	.291	.325	.397	.467	.54	.67	.82	.96	1.10	1.24	1.39	1.53	1.67	1.81	1.96	2.09	2.24	2.39	2.52	2.66	2.80	2.94	3.08	3.22	3.37
19	.070	.101	.130	.161	.193	.221	.252	.282	.343	.404	.46	.58	.71	.83	.95	1.07	1.19	1.31	1.43	1.56	1.68	1.81	1.92	2.04	2.16	2.29	2.40	2.52	2.65	2.77	2.89
20	.062	.086	.113	.136	.163	.188	.214	.238	.289	.339	.39	.49	.59	.69	.80	.893	1.00	1.10	1.20	1.30	1.41	1.50	1.61	1.71	1.81	1.91	2.01	2.12	2.22	2.32	2.42
21	.057	.081	.104	.128	.151	.173	.196	.219	.266	.312	.357	.450	.542	.635	.727	.820	.913	1.004	1.096	1.189	1.281	1.37	1.466	1.558	.650	1.743	1.835	1.928	2.02		
22	.051	.072	.093	.112	.133	.152	.174	.192	.233	.275	.316	.396	.477	.556	.638	.718	.799	.880	.960	1.041	1 122	1.203	1.283	1.364	1.446	1.526	1.607				
23	.047	.066	.082	.102	.119	.136	.155	.173	.209	.245	.281	.354	.426	.497	.571	.641	.714	.787	.858	.931	1.004	1.075	1.147	1.218	1.291						
24	.042	.058	.074	.090	.107	.121	.137	.154	.186	.218	.249	.312	.376	.438	.502	.566	.630	.693	.756	.820	.884	.946	1 009								
25	.039	.052	.068	.081	.096	.110	.126	.140	.169	.197	.226	.285	.342	.399	.457	.516	.573														

Lap-Welded Charcoal Iron Boiler Tubes.

TABLE OF STANDARD DIMENSIONS.

DIAMETER.		Thickness.	Wire gauge.	CIRCUMFERENCE.		TRANSVERSE AREAS.			LENGTH OF TUBE PER SQ. FOOT OF		Nominal Weight per Foot.
External.	Internal.			External.	Internal.	External.	Internal.	Metal.	External Surface.	Internal Surface.	
Inches.	Inches.	Inches.	No.	Inches.	Inches.	Sq. In.	Sq. In.	Sq. In.	Feet.	Feet.	Pounds.
1	.856	.072	15	3.142	2.689	.785	.575	.21	3.819	4.462	.71
1⅛	.981	.072	15	3.534	3.082	.994	.756	.238	3.395	3.894	.8
1¼	1.106	.072	15	3.927	3.475	1.227	.961	.266	3.056	3.453	.89
1 5/16	1.146	.083	14	4.123	3.6	1.353	1.031	.322	2.91	3.333	1.08
1⅜	1.209	.083	14	4.32	3.798	1.485	1.148	.337	2.779	3.159	1.13
1½	1.334	.083	14	4.712	4.191	1.767	1.398	.369	2.548	2.863	1.24
1⅝	1.435	.095	13	5.105	4.508	2.074	1.618	.456	2.357	2.662	1.53
1¾	1.56	.095	13	5.498	4.901	2.405	1.911	.494	2.182	2.448	1.66
1⅞	1.685	.095	13	5.89	5.294	2.761	2.23	.531	2 033	2.267	1.78
2	1.81	.095	13	6.283	5.686	3.142	2.573	.569	1.907	2.11	1.91
2⅛	1.935	.095	13	6.676	6.079	3.547	2.94	.607	1.797	1 974	2.04
2¼	2.06	.095	13	7.069	6.472	3.976	3.333	.643	1.698	1.854	2.16
2⅜	2.157	.109	12	7.461	6.776	4.43	3.654	.776	1.608	1.771	2.61
2½	2.282	.109	12	7.854	7.169	4.909	4.09	.819	1.528	1.674	2.75
2¾	2.532	.109	12	8.639	7.954	5.94	5.035	.905	1.389	1.509	3.04
2⅞	2.657	.109	12	9.032	8.347	6.492	5.545	.947	1.328	1.438	3.18
3	2.782	.109	12	9.425	8.74	7.069	6.079	.99	1.273	1.373	3.33
3¼	3.01	.12	11	10.21	9.456	8.296	7.116	1.18	1.175	1.26	3.96
3½	3.26	.12	11	10.996	10.241	9.621	8.347	1.274	1.091	1.172	4.28
3¾	3.51	.12	11	11.781	11.027	11.045	9.676	1.369	1.018	1.088	4.6
4	3.732	.134	10	12.566	11.724	12.566	10.939	1.627	.955	1.024	5.47

Lap-Welded Charcoal Iron Boiler Tubes.

TABLE OF STANDARD DIMENSIONS.—*Continued.*

DIAMETER.		Thickness.	Wire gauge.	CICRUMFERENCE.		TRANSVERSE AREAS.			LENGTH OF TUBE PER SQ. FOOT OF		Nominal weight per Foot.
External.	Internal.			External.	Internal.	External.	Internal.	Metal.	External Surface.	Internal Surface.	
Inches.	Inches.	Inches.	No.	Inches.	Inches.	Sq. In.	Sq. In.	Sq. In.	Feet.	Feet.	Pounds.
4¼	3.982	.134	10	13.352	12.51	14.186	12.453	1.733	.899	.959	5.82
4⅛	4.232	.134	10	14.137	13.295	15.904	14.066	1.838	.849	.902	6.17
4¾	4.482	.134	10	14.923	14.081	17.721	15.777	1.944	.804	.852	6.53
5	4.704	.148	9	15.708	14.778	19.635	17.379	2.256	.764	.812	7.58
5¼	4.954	.148	9	16.493	15.563	21.648	19.275	2.373	.728	.771	7.97
5½	5.204	.148	9	17.279	16.349	23.758	21.27	2.488	.694	.734	8.36
6	5.67	.165	8	18.85	17.813	28.274	25.249	3.025	.637	.673	10.16
7	6.67	.165	8	21.991	20.954	38.485	34.942	3.543	.546	.573	11.9
8	7.67	.165	8	25.133	24.096	50.266	46.204	4.062	.477	.498	13.65
9	8.64	.18	7	28.274	27.143	63.617	58.629	4.988	.424	.442	16.76
10	9.594	.203	6	31.416	30.14	78.54	72.292	6.248	.382	.398	20.99
11	10.56	.22	5	34.558	33.175	95.033	87.583	7.45	.347	.362	25.03
12	11.542	.229	4½	37.699	36.26	113.098	104.629	8.469	.319	.33	28.46
13	12.524	.238	4	40.841	39.345	132.733	123.19	9.543	.294	.305	32.06
14	13.504	.248	3½	43.982	42.424	153.938	143.224	10.714	.273	.283	36.
15	14.482	.259	3	47.124	45.497	176.715	164.72	11.995	.254	.264	40.3
16	15.432	.284	2	50.26	48.48	201.06	187.04	14.02	.239	.248	47.11
17	16.4	.3	1	53.41	51.52	226.98	211.24	15.74	.225	.233	52.89
18	17.32	.34	0	56.55	54.41	254.47	235.61	18.86	.212	.221	63.37

NOTE.—In estimating effective steam-heating or evaporating surface of tubes, the surface in contact with air or gases of combustion, according to manner of application, as whether internal or external, is to be thus taken. For heating liquids by steam, superheating steam, or transferring heat from one liquid or one gas to another, mean surface of tubes is to be computed.

Lap-Welded Charcoal Iron Marine Boiler Tubes.

Of Thickness of Metal Required by U. S. Law for Western Waters.

Diameter.	THICKNESS.		Circumference.	Transverse Area.	External Surface per 1 Foot Length of Tube.	Nominal Weight per Foot
Exter. Inches.	Inches.	Wire Gauge.	External Inches.	Internal Sq. Ins.	Sq. Feet.	Lbs.
12	.24	4	37.699	104.23	3.142	29.8
13	.26	3	40.841	122.33	3.403	35.0
14	.28	2	43.982	141.87	3.665	40.58
15	.29	1	47.124	163.31	3.927	45.06
16	.3125	.....	50.265	185.66	4.189	51.77

CARBON.

A non-metallic elementary solid body, which is widely diffused throughout nature, being found in all vegetable and animal substances, and forming the principal element of the various kinds of mineral coal; it is the pure combustible base of charcoal.

CARBONIC ACID.

Is composed of one equivalent of carbon and two of oxygen. When uncombined, it exists in the form of a gas, but may be reduced to a liquid under a pressure of 36 atmospheres, and even to a solid form like snow by the intense cold consequent on the rapidity of its evaporation from the liquid state; it is a constant product of combustion and of respiration, and when unmixed with atmospheric air, extinguishes flame and suffocates animals.

Lap-Welded Semi-Steel Locomotive Tubes.

TABLE OF STANDARD DIMENSIONS.

DIAMETER.		Thick-ness.	Wire Gauge.	CIRCUMFERENCE.		TRANSVERSE AREAS.			LENGTH OF TUBE PER SQ. FOOT OF		Nominal Weightper Foot.
External.	Internal.			External.	Internal.	External.	Internal.	Metal.	External Surface.	Internal Surface.	
Inches.	Inches	Inches.	Number.	Inches.	Inches.	Sq. Ins.	Sq. Ins.	Sq. Ins.	Feet.	Feet.	Pounds.
1	.834	.083	14	3.1416	2.62	.7854	.5463	.2391	3.82	4.58	.81
1¼	1.084	.083	14	3.927	3.405	1.227	.9229	.3041	3.056	3.524	1.03
1½	1.31	.095	13	4.712	4.115	1.767	1.3478	.4192	2.546	2.916	1.42
1¾	1.532	.109	12	5.498	4.813	2.405	1.8433	.5617	2.183	2.493	1.91
2	1.782	.109	12	6.283	5.598	3.1416	2.494	.6476	1.91	2.144	2 2
2¼	2.032	.109	12	7.069	6.384	3 976	3.2429	.7331	1.698	1.88	2.49
2½	2.26	.12	11	7.854	7.1	4 9087	4.011	.8977	1.528	1.69	3.05
2¾	2.51	.12	11	8.639	7.885	5.94	4.948	.992	1.389	1.522	3.37
3	2.76	.12	11	9.425	8.67	7 069	5.983	1.086	1.273	1.384	3.68

WELL TUBING.

Flush Joint.

FINISHED SMOOTH INSIDE AND OUTSIDE.

Nominal Inside Diameter. Inches.	Actual Outside Diameter. Inches.	Weight per Foot. Pounds.	No. of Threads per Inch of Screw.
2	2.37	3.61	12
2½	2.87	5.74	12
3	3.50	7.54	12
3½	4.00	9.00	12
4	4.50	10.66	12
4½	5.00	12.34	12
5	5.56	14.50	12
6	6.62	18.76	12
7	7.62	23.27	12
8	8.62	28.18	12
9	9.68	33.70	12
10	10.75	40.06	12
11	11.75	45.02	12
12	12.75	49.00	12
13	14.00	53.92	12
14	15.00	57.89	12
15	16.00	66.00	12

Flush joint tubing is of uniform inside and outside diameter, when screwed together.

Machine Screw Taps.

AMERICAN SCREW CO.'S STANDARD.

Size of Screw Gauge.	No. of Threads to Inch.			Size of Drill to Drill for Tapping.
No 2	56			No. 53
" 3	48			" 48
" 4	36	40		" 43
" 5	40			" 42
" 6	32			" 33
" 8	32			" 28
" 10	24	32		" 24
" 12	24			" 17
" 14	20	24		" 6
" 16	16	18	20	" 3
" 18	16	18	20	15/64 inch.
" 20	16	18		17/64 "
" 24	16			19/64 "
" 28	14	16		21/64 "
" 30	14	16		11/32 "

Speed of Taps for Gas and Steam Pipe Fittings.

Size of Tap.	Revolutions per Minute.
½ inch	150
¾ inch	100
1 inch	70
1¼ inch	56
1½ inch	40
2 inch	20
2½ inch	14 to 16
3 inch	10 to 12
3½ to 4 inch	8 to 9

SHRINKAGE OF TIRES.

38 inch diameter, .040 inch allowance for shrinkage.
44 " " .047 " " "
50 " " .053 " " "
56 " " .060 " " "
62 " " .066 " " "
66 " " .070 " " "

Machine steel may be strained to 30,000 pounds per square inch without giving any permanent set, or exceeding its elastic limit.

A strain of 30,000 pounds causes an elastic stretch of $\frac{1}{1000}$th part of its length.

As a general rule, allow $\frac{1}{1000}$th part of an inch for every inch in diameter for shrinkage.

COMPARISON OF THERMOMETRIC SCALES.

To convert the degrees of Centigrade into those of Fahrenheit, multiply by 9, divide by 5, and add 32.

To convert degrees of Centigrade into those of Reaumur, multiply by 4 and divide by 5.

To convert degrees of Fahrenheit into those of Centigrade, deduct 32, multiply by 5, and divide by 9.

To convert degrees of Fahrenheit into those of Reaumur, deduct 32, divide by 9, and multiply by 4.

To convert degrees of Reaumur into those of Fahrenheit, multiply by 9, divide by 4, and add 32.

In De Lisle's thermometer, used in Russia, the gradation begins at boiling point, which is marked zero, and the freezing point is 150.

EXAMPLE :

100° Centigrade equal 212° Fahrenheit.

Thus:

$$100 \times 9 = 900$$
$$\frac{900}{5} = 180$$
$$180 + 32 = 212$$

212° Fahrenheit equal 100° Centigrade.

$$212 - 32 = 180$$
$$180 \times 5 = 900$$
$$\frac{900}{9} = 100$$

SPEED TABLE FOR TRAINS.

Speed per Hour.	Time of Performing.						Speed per Hour.	Time of Performing.				
	¼ Mile.		½ Mile.		1 Mile.			¼ Mile.		½ Mile.		1 Mile.	
Miles.	M.	S.	M.	S.	M.	S.	Miles.	M.	S.	M.	S.	M.	S.
5	3	0	6	0	12	0	33	0	27	0	54	1	49
6	2	30	5	0	10	0	34	0	26	0	53	1	46
7	2	8	4	17	8	34	35	0	25	0	51	1	43
8	1	52	3	45	7	30	36	0	25	0	50	1	40
9	1	40	3	20	6	40	37	0	24	0	48	1	37
10	1	30	3	0	6	0	38	0	23	0	47	1	34
11	1	21	2	43	5	27	39	0	23	0	46	1	32
12	1	15	2	30	5	0	40	0	22	0	45	1	30
13	1	9	2	18	4	37	41	0	21	0	43	1	27
14	1	4	2	8	4	17	42	0	21	0	42	1	25
15	1	0	2	0	4	0	43	0	20	0	41	1	23
16	0	56	1	52	3	35	44	0	20	0	40	1	21
17	0	53	1	46	3	41	45	0	20	0	40	1	20
18	0	50	1	40	3	20	46	0	19	0	39	1	18
19	0	47	1	34	3	9	47	0	19	0	38	1	16
20	0	45	1	30	3	0	48	0	18	0	37	1	15
21	0	42	1	25	2	51	49	0	18	0	36	1	13
22	0	40	1	21	2	43	50	0	18	0	36	1	12
23	0	39	1	18	2	36	51	0	17	0	35	1	10
24	0	37	1	15	2	30	52	0	17	0	34	1	9
25	0	36	1	12	2	24	53	0	17	0	34	1	7
26	0	34	1	9	2	18	54	0	16	0	33	1	6
27	0	33	1	6	2	13	55	0	16	0	32	1	5
28	0	32	1	4	2	8	56	0	16	0	32	1	4
29	0	31	1	2	2	4	57	0	15	0	31	1	3
30	0	30	1	0	2	0	58	0	15	0	31	1	2
31	0	29	0	58	1	56	59	0	15	0	30	1	1
32	0	28	0	56	1	52	60	0	15	0	30	1	0

TABLE SHOWING DIFFERENCE OF TIME AT 12 O'CLOCK (NOON) AT NEW YORK.

New York	12.00 Noon.
Buffalo	11.40 A. M.
Cincinnati	11.18 "
Chicago	11.07 "
St. Louis	10.55 "
San Francisco	8.45 "
New Orleans	10.56 "
Washington	11.48 "
Charleston	11.36 "
Havana	11.25 "
Boston	12.12 P. M.

CAST IRON FLANGE UNIONS.

Table of Standard Dimensions.

Nominal Internal Diameter of Pipe.	External Diameter of Flange.	Thickness of Metal.	No. of Bolt Holes.	From Center to Center of Holes.	Size of Bolts.	Approx. Weight per Pair.
Inches.	Inches.	Inches.	.....	Inches.	Inches.	Pounds.
¾	4 5/16	1	3	3¼	⅜	5
1	4 9/16	1	3	3½	⅜	6
1¼	4⅞	1	4	3½	½	6½
1½	5¼	1	4	3⅞	½	7
2	5¾	1	4	4½	⅝	8
2½	6¼	1	4	5	⅝	9
3	7¼	1¼	5	5¾	¾	15
3½	7½	1¼	5	6	¾	17
4	8½	1⅜	5	6¾	¾	23
4½	9	1½	6	7½	¾	26
5	9	1½	6	7½	¾	29
6	10½	1½	6	8⅝	¾	31
7	11¾	1½	6	10	¾	41
8	13	1½	6	11⅛	¾	48
9	14	1½	6	12	¾	54
10	15	1½	7	12¾	⅞	60
11	16	1⅝	7	14	⅞	75
12	17	1¾	8	15	⅞	80
13	18	1¾	8	16	⅞	95
14	19	1¾	8	17⅛	⅞	100

SAFETY VALVE CALCULATIONS.

Adopted by U. S. Board of Supervising Inspectors.

To find the weight required to load a given safety-valve to blow off at any specified pressure:

Rule: 1st. Multiply the pressure in pounds per square inch at which the valve is to be set by the area of the valve in square inches. Set this product aside and designate it as number one.

2nd. Multiply the weight of the lever in pounds by the distance in inches of its center of gravity from the fulcrum; divide the product by the distance in inches from the center of the valve to the fulcrum, and add to the quotient the weight of the valve and spindle in pounds. Set the sum aside, and designate it as quantity number two.

3rd. Divide the distance in inches from the center of the valve to the fulcrum by the distance, also expressed in inches, from the center of the weight to the fulcrum. Set this quantity aside, and designate it as number three.

4th. Subtract quantity number 2 from quantity number 1, and multiply the difference by number 3. The product will be the required weight in pounds.

EXAMPLE: What must be the weight at the end of the lever to make the blowing off pressure 80 pounds, under following conditions:

Diameter of valve, 4 inches.

Distance from fulcrum to center of weight 36 inches. Distance from fulcrum to center of valve, 4 inches.

Weight of lever, 7 pounds.

Distance from fulcrum to center of gravity of lever, 15½ inches.

Weight of valve, 3 pounds.

Area of 4 inch valve = 12.566 square inch.

$$80 \times 12.566 = 1005.28.$$

$$\frac{7 \times 15.5}{4} + 3 = 30.125.$$

$$4 \div 36 = .111.$$

Then $(1005.28 - 30.125) \times .111 = 108.24$ pounds. Ans.

To find the length of the lever, or distance from the fulcrum at which a given weight must be set to cause the valve to blow at any specified pressure.

RULE:

1st. Multiply the area of the valve in square inches by the pressure in pounds per square inch at which it is required to blow. Set the product aside and designate it "number 1."

2nd. Multiply the weight of the lever in pounds by the distance in inches of its center of gravity from the fulcrum; divide the product by the distance in inches from the center of the valve to the fulcrum; add to the quotient the weight of the valve and spindle; set the sum aside, and designate it "number 2."

3rd. Divide the distance in inches from the center of valve to fulcrum by the weight of the ball in pounds, and call the quotient "number 3."

4th. Subtract "number 2" from "number 1," and multiply the difference by "number 3;" the product will express the distanee in inches that the ball must be placed from the fulcrum to produce the required pressure.

EXAMPLE:

How far must the weight be placed from the fulcrum to make the blowing-off pressure 75 pounds, under the following conditions:

Diameter of valve = 4 inches.

Distance from fulcrum to center of valve = 4 inches.

Weight of lever = 7 pounds.

Distance from fulcrum to center of gravity of lever = 15½ inches.

Weight of valve = 3 pounds.

Weight of pi = 108.24 pounds.

Then:

Area of 4″ valve = 12.566 square inches.

$$75 \times 12.566 = 942.45.$$

$$\frac{7 \times 15.5}{4} + 3 = 30.125.$$

$$4 \div 108\ 24 = .0369.$$

Then: $942.45 - 30.125 = 912.325$, and

$912.325 \times .0369 = 35.66$ inches. Ans.

To find at what pressure a safety-valve will commence to blow when the weight and its position on the lever are known.

RULE: Multiply the weight of the lever by the distance of its center of gravity from the fulcrum; add to this product that obtained by multiplying the weight of the ball by its distance from the fulcrum; divide the sum of these two products by the distance from the center of the valve to the fulcrum, and add to the quotient as obtained the weight of the valve and spindle. Divide this sum by the area of the valve; the quotient will be the required blowing-off pressure in pounds per square inch.

EXAMPLE:

At what pressure will a safety-valve commence to blow off under the following conditions?

Diameter of valve = 4 inches.

Distance from fulcrum to center of weight = 36 inches.

Distance from fulcrum to center of valve = 4 inches.

Weight of lever = 7 pounds.

Distance from fulcrum to center of gravity of lever = 15½ inches.

Weight of valve = 3 pounds.

Weight of pi = 108.24 pounds.

Then:

Area of 4 inch valve = 12.566 square inches.

$7 \times 15.5 = 108.5.$

$36 \times 108.24 = 3896.64.$

$108.5 + 3896.64 = 4005.14.$

$\frac{4005.14}{4} = 1001.285.$

$1001.285 + 3 = 1004.285.$

$\frac{1004.285}{12.566} = 79.92$ pounds pressure.

Ans.

And where the weight is placed 33.66 inches from fulcrum, we have:

$7 \times 15.5 = 108.5.$

$33.66 \times 108.24 = 3643.3584.$

$108.5 + 3643.3584 = 3751.8584.$

$\frac{3751.8584}{4} = 937.9646.$

$937.9646 + 3 = 940.9646.$

$\frac{940.9646}{12.566} = 74.88$ pounds pressure.

Ans.

To Find the Proper Area of a Safety-Valve for Any Boiler.

UNITED STATES STEAMBOAT INSPECTOR'S RULE.

For a common lever valve.

Allow one square inch of area of valve for every two square feet of area of grate.

For a spring loaded safety-valve.

Allow one square inch of area of valve, for every three square feet of area of grate.

EXAMPLE: A boiler grate is 48 inches wide, and 60 inches long, what should be the diameter of its lever safety valve?

$$48 \times 60 = 2880 \text{ sqr. inches.} \quad \frac{2880}{144} = 20 \text{ sqr. ft.}$$

Area of safety valve should be 10 sqr. inches.

$$\frac{10}{.7854} = 12.7323 + . \qquad \sqrt[2]{12.7323} = 3.57 \text{ inches nearly. Ans.}$$

Another method.

$\sqrt[2]{10} = 3.162$ nearly = side of a square whose area is 10 sqr. in. $3.162 \times 1.128 = 3.57$ nearly.

NOTE: The side of a square multiplied by 1.128 equals the diameter of an equal circle.

EXAMPLE: A boiler grate is 48 inches wide and 60 inches long, what should be the diameter of its spring loaded safety-valve?

$$\frac{2880}{144} = 20 \text{ sqr. ft.}$$

Area of safety-valve should be 6.6666 square inches.

$$\frac{6.6666}{.7854} = 8.4882 +$$

Square root of $8.4882 = 2.91 +$ = diameter of valve in inches.

Or:

Square root of $6.6666 = 2.58$. $2.58 \times 1.128 = 2.91 +$ = diameter of valve in inches.

The following table gives the area of the safety-valve for one square foot of grate as applied to boilers used at different pressures:

PRESSURES PER SQUARE INCH.

10	20	30	40	50	60	70	80	90	100	110	120
1.21	0.79	0.58	0.46	0.38	0.33	0.29	0.25	0.23	0.21	0.19	0.17

(Area of safety-valve corresponding to one square foot of grate).

EXAMPLE: Required area of safety-valve in square inches for boiler running at 80 lbs. pressure and 30 feet grate surface.

For 1 foot square from table at 80 lbs. 0.25
Square feet grate surface 30

Area of valve in square inches 7.50

To Find the Area of Opening of a Conical Safety Valve, the Diameter of Valve in Inches, the Lift, Depth of Seat and Bevel of Valve Being Given.

RULE. Multiply the diameter of the valve by the lift, and this product by the constant number 2.22. Then multiply the square of the lift by the constant number 1.11. Add the two products together and the sum will equal the area of the opening of valve in square inches.

The above rule applies only to valves with a bevel of 45 degrees.

EXAMPLE: What is the area of opening of a 3 inch valve, with ¼ inch lift, depth of seat ⅜ inch, and bevel of valve 45 degrees?

$3 \times .25 = .75$
$.75 \times 2.22 = 1.6650.$
$.25 \times .25 = .0625.$
$.0625 \times 1.11 = .069375.$
$1.6650 + .069375 = 1.734375.$
Or, 1¾ square inches, nearly. Ans.

Lap on a Slide Valve.

To find the lap on a Slide Valve.

RULE: From the length of the stroke of the piston, subtract the length of that part of the stroke that is to be made, before steam is cut off. Divide the remainder by the length of the stroke of the piston, and extract the square root of the quotient. Multiply the square root thus found by one-half the length of the stroke of the valve, and from the product take one-half the lead (if any) and the remainder will be the amount of lap required.

EXAMPLE: Suppose an engine of 48″ stroke, travel of valve 6″ (no lead) is required to cut off at half stroke, what amount of lap should the valve have?

Half stroke = 24″

$$\frac{24}{48} = .50. \quad \sqrt{.50} = .707.$$

$.707 \times 3 = 2.121''$ = amount of lap required. Ans.

Amount of Lap Required on the Steam Side of the Valve to Cut the Steam off at Any of the Under Noted Parts of the Stroke.

Length of Stroke of the Valve in Inches.	⅛	7/24	¼	5/24	1/6	⅛	1/12	1/24
3	.86	.81	.75	.68	.61	.53	.44	.30
3½	1.01	.94	.87	.80	.71	.62	.50	.35
4	1.16	1.08	1.00	.91	.82	.71	.58	.41
4½	1.30	1.21	1.12	1.03	.92	.80	.65	.46
5	1.44	1.35	1.25	1.14	1.02	.88	.72	.51
5½	1.58	1.48	1.37	1.25	1.12	.97	.79	.56
6	1.73	1.62	1.50	1.37	1.22	1.06	.86	.61
6½	1.88	1.75	1.62	1.48	1.32	1.15	.94	.66
7	2.02	1.89	1.75	1.60	1.43	1.24	1.01	.71

The strength of shafts or bars of iron is, for bending and twisting strains, as the cubes of their diameters. Thus, a 2-inch shaft is 8 times as strong as a 1-inch shaft, while a 3-inch shaft is 27 times as strong.

WEIGHT OF ONE FOOT IN LENGTH OF WIRE, OF IRON, STEEL OR COPPER.

Diameters by the Birmingham Gauge for Iron Wire, Sheet Iron, and Steel.					Diameters by Brown & Sharpe's Gauge.				
No. of Gauge.	Diam.	Iron.	Steel.	Copper.	No. of Gauge.	Diam.	Iron.	Steel.	Copper.
	Ins.	Lbs.	Lbs.	Lbs.		Ins.	Lbs.	Lbs.	Lbs.
0000	.454	.546207	.551360	.623913	0000	.46000	.56074	.566030	.640513
000	.425	.478656	.483172	.546752	000	.40964	.444683	.448879	.507946
00	.380	.382660	.386270	.437099	00	.36480	.352659	.355986	.402830
0	.340	.306340	.309230	.349921	0	.32486	.279665	.282303	.319451
1	.300	.238500	.240750	.272430	1	.28930	.221789	.223891	.253342
2	.284	.213738	.215755	.244146	2	.25763	.175888	.177548	.200911
3	.259	.177765	.179442	.203054	3	.22942	.139480	.140796	.159323
4	.238	.150107	.151523	.171461	4	.20431	.110616	.111660	.126353
5	.220	.128260	.129470	.146507	5	.18194	.087720	.088548	.100200
6	.203	.109204	.110234	.124740	6	.16202	.069565	.070221	.079462
7	.180	.085860	.086667	.098075	7	.14428	.055165	.055685	.063013
8	.165	.072146	.072827	.082410	8	.12849	.043751	.044164	.049976
9	.148	.058046	.058593	.066303	9	.11443	.034699	.035026	.039636
10	.134	.047583	.048032	.054353	10	.10189	.027512	.027772	.031426
11	.120	.038160	.038520	.043589	11	.090742	.021820	.022026	.024924
12	.109	.031485	.031782	.035964	12	.080808	.017304	.017468	.019766
13	.095	.023916	.024142	.027319	13	.071961	.013722	.013851	.015674
14	.083	.018256	.018428	.020853	14	.064084	.010886	.010989	.012435
15	.072	.013738	.013867	.015693	15	.057068	.008631	.008712	.009859
16	.065	.011196	.011302	.012789	16	.050820	.006845	.006909	.007819
17	.058	.008915	.008999	.010183	17	.045257	.005427	.005478	.006199
18	.049	.006363	.006423	.007268	18	.040303	.004304	.004344	.004916
19	.042	.004675	.004719	.005340	19	.035890	.003413	.003445	.003899
20	.035	.003246	.003277	.003708	20	.031961	.002708	.002734	.003094
21	.032	.002714	.002739	.003100	21	.028462	.002147	.002167	.002452
22	.028	.002078	.002097	.002373	22	.025347	.001703	.001719	.001945
23	.025	.001656	.001672	.001892	23	.022571	.001350	.001363	.001542
24	.022	.001283	.001295	.001465	24	.020100	.001071	.001081	.001223
25	.020	.001060	.001070	.001211	25	.017900	.0008491	.0008571	.0009699
26	.018	.0008586	.0008687	.0009807	26	.015940	.0006734	.0006797	.0007692
27	.016	.0006784	.0006848	.0007749	27	.014195	.0005340	.0005391	.0006099
28	.014	.0005194	.0005243	.0005933	28	.012641	.0004235	.0004275	.0004837
29	.013	.0004479	.0004521	.0005116	29	.011257	.0003358	.0003389	.0003835
30	.012	.0003816	.0003852	.0004359	30	.010025	.0002663	.0002688	.0003042
31	.010	.0002650	.0002675	.0003027	31	.008928	.0002113	.0002132	.0002413
32	.009	.0002147	.0002167	.0002452	32	.007950	.0001675	.0001691	.0001913
33	.008	.0001696	.0001712	.0001937	33	.007080	.0001328	.0001341	.0001517
34	.007	.0001299	.0001311	.0001483	34	.006304	.0001053	.0001063	.0001204
35	.005	.00006625	.00006688	.00007568	35	.005614	.00008366	.00008445	.0000956
36	.004	.0000424	.0000428	.00004843	36	.005000	.00006625	.00006687	.0000757
Sp. grav.....		7.77	7.85	8.89	37	.004453	.00005255	.00005304	.00006003
Wts. of a cub. foot...		485.*	490.	555.	38	.003965	.00004166	.00004205	.00004758
cub. in.....		.2807	.2836	.3212	39	.003531	.00003305	.00003336	.00003775
					40	.003144	.00002620	.00002644	.00002992

Hammered copper is heavier than rolled, and rolled heavier than cast copper, bulk for bulk.

The pressure of the cross head gibs on the guides of an engine has the same ratio to the pressure on the piston that the length of crank has to the length of the connecting rod.

TABLE INDICATING SIZE, WEIGHT AND LENGTH OF IRON AND STEEL WIRE.

Washburn & Moen's Gauge.

Gauge Numbers.	Diameter. Inch.	Weight of 100 feet. Pounds.	Weight of One Mile. Pounds.	Feet in 2,000 Lbs.	Area. Sq. Inch.
3-0	.362	34.73	1834	5,759	.102921
2-0	.331	29.04	1533	6,886	.086049
1-0	.307	25.00	1318	8,000	.074023
1	.283	21.23	1121	9,425	.062901
2	.263	18.34	968	10,905	.054325
3	.244	15.78	833	12,674	.046759
4	.225	13.39	707	14,936	.039760
5	.207	11.35	599	17,621	.033653
6	.192	9.73	514	20,555	.028952
7	.177	8.30	439	24,906	.024605
8	.162	6.96	367	28,734	.020612
9	.148	5.80	306	34,483	.017203
10	.135	4.83	255	41,408	.014313
11	.120	3.82	202	52,356	.011309
12	.105	2.92	154	68,493	.008659
13	.092	2.24	118	89,286	.006647
14	.080	1.69	89	118,343	.005026
15	.072	1.37	72	145,985	.004071
16	.063	1.05	55	190,476	.003117
17	.054	.77	41	259,740	.002290
18	.047	.58	31	344,827	.001734
19	.041	.45	24	444,444	.001320
20	.035	.32	17	625,000	.000962
21	.032	.27	14	740,741	.000804
22	.028	.21	11	952,381	.000615
23	.025	.175	9.24		.000491
24	.023	.140	7.39		.000415
25	.020	.116	6.124		.000314
26	.018	.093	4.91		.000254
27	.017	.083	4.382		.000227
28	.016	.074	3.907		.000201
29	.015	.061	3.22		.000176
30	.014	.054	2.851		.000154
31	.0135	.050	2.64		.000143
32	.013	.046	2.428		.000132
33	.011	.037	1.953		.000095
34	.010	.030	1.584		.000078
35	.0095	.025	1.32		.000071
36	.009	.021	1.161		.000064

HOW TO COMPUTE THE CONTENTS OF A HOPPER.

The following rule for computing the contents of a hopper is simple and easy of application, and will be found reliable in practice:

Multiply the length by the breadth, in inches, and this product by one-third of the depth, measuring to the point. Divide the last product by 2,150 (the number of cubic inches in a bushel), and the quotient thus obtained will be the contents of the hopper in bushels.

Weight of Copper and Brass Wire.

DIAMETERS DETERMINED BY AMERICAN GAUGE (BROWN & SHARPE).

Number of Gauge.	Size of each Number.	WEIGHT OF WIRE PER 1,000 LINEAL FEET.			
		Wrought Iron.	Steel.	Copper.	Brass.
	Inch.	Lbs.	Lbs.	Lbs.	Lbs.
0000	.46000	560.74	566.03	640.51	605.18
000	.40964	444 68	448.88	507.95	479.91
00	.36480	352.66	355.99	402.83	380.67
0	.32486	279.67	282.30	319.45	301.82
1	.28930	221.79	223.89	253.34	239.35
2	.25763	175.89	177.55	200.91	189.82
3	.22942	139.48	140.80	159.32	150.52
4	.20431	110.62	111.66	126.35	119.38
5	.18194	87.720	88.548	100.20	94.666
6	.16202	69.565	70.221	79.462	75.075
7	.14428	55.165	55.685	63.013	59.545
8	.12849	43.751	44.164	49.976	47.219
9	.11443	34.699	35.026	39.636	37.437
10	.10189	27.512	27.772	31.426	29.687
11	.090742	21.820	22.026	24.924	23.549
12	.080808	17.304	17.468	19.766	18.676
13	.071961	13.722	13.851	15.674	14.809
14	.064084	10.886	10.989	12.435	11.746
15	.057068	8.631	8.712	9.859	9.315
16	.050820	6.845	6.909	7.819	7.587
17	.045257	5.427	5.478	6.199	5.857
18	.040303	4.304	4.344	4.916	4.645
19	.035890	3.413	3.445	3.899	3.684
20	.031961	2.708	2.734	3.094	2.920
21	.028462	2.147	2.167	2.452	2.317
22	.025347	1.703	1.719	1.945	1.838
23	.022571	1.350	1.363	1.542	1.457
24	.020100	1.071	1.081	1.223	1.155
25	.017900	0.8491	0.8571	.9699	0.9163
26	.01594	0.6734	0.6797	.7692	0.7267
27	.014195	0.5340	0.5391	.6099	0.5763
28	.012641	0.4235	0.4275	.4837	0.4570
29	.011257	0.3358	0.3389	.3835	0.3624
30	.010025	0.2663	0.2688	.3042	0.2874
31	.008928	0.2113	0.2132	.2413	0.2280
32	.007950	0.1675	0.1691	.1913	.1808
33	.007080	0.1328	0.1341	.1517	.1434
34	.006304	0.1053	0.1063	.1204	.1137
35	.005614	.08366	.08445	.0956	.0915
36	.005000	.06625	.06687	.0757	.0715
37	.004453	.05255	.05304	.06003	.05671
38	.003965	.04166	.04205	.04758	.04496
39	.003531	.03305	.03336	.03755	.03566
40	.003144	.02620	.02644	.02992	.02827
Specific Gravity.....		7.7747	7.847	8.880	8.386
Weight per Cubic Foot		485.874	90.45	554.988	524.16

Weight Per Mile of Copper Wire.

Number.	Roebling.	Birmingham.	Brown & Sharpe.	English Legal Standard.
0000	2466	3286	3375	2555
000	2092	2884	2677	2210
00	1750	2305	2123	1933
0	1504	1846	1684	1682
1	1278	1437	1335	1437
2	1104	1287	1058	1216
3	950	1071	839	1012
4	808	904	665	860
5	684	773	528	718
6	588	657	418	588
7	500	517	332	495
8	419	435	263	409
9	350	350	209	332
10	291	287	166	263
11	230	230	131	215
12	176	190	104	173
13	135	144	83	135
14	102	110	65	102
15	83	83	52	83
16	64	68	41	65
17	47	53¾	33	50
18	35	38	26	37
19	27	28	20¾	26
20	19½	19½	16¼	20¾
21	16⅛	16¼	13	16¼
22	12½	12½	10¼	12½
23	10¼	10¼	8⅛	9¼
24	8¼	7¾	6½	7¾
25	6½	6½	5⅛	6½
26	5	5	4	5
27	4½	4	3¼	4
28	4	3¼	2½	3½
29	3⅝	2⅝	2	3
30	3¼	2¼	1⅝	2½

Hard Copper Telegraph Wire.

Size by Brown & Sharp Gauge.	Resistance in Ohms per Mile.	Breaking Strength.	Weight per Mile.
9	4.30	625	209
10	5.40	525	166
11	6.90	420	131
12	8.70	330	104
13	10.90	270	83
14	13.70	213	66
15	17.40	170	52
16	22.10	130	41

Iron Telegraph Wire.

TABLE OF LENGTH, SIZE, WEIGHT, STRENGTH, ETC.

Birmingham Wire Gauge.	Diameter in Inches.	Weight per 100 Feet.	Weight 1 Mile, Galvanized.	Weight 1 Mile, not Galvanized.	Breaking Strain.	Length of Bundles in Feet.
0	0.340	29.44	1490	1416	7280	213
1	0.300	22.92	1210	1150	5650	273
2	0.280	19.97	1054	1002	4930	315
3	0.260	17.22	909	854	4250	363
4	0.240	11.00	775	747	3620	429
5	0.220	12.34	651	619	3040	510
6	0.200	10.19	538	512	2510	609
7	0.185	8.72	461	438	2220	717
8*	0.170	7.37	389	370	1840	858
9*	0.155	6.12	323	307	1560	1026
10*	0.140	4.99	264	251	1280	1260
11*	0.125	3.98	211	200	1000	1587
12	0.110	3.08	163	157	800	2100
13	0.095	2.35	124	118	568	2679
14	0.085	1.84	97	93	456	3426
15	0.075	1.43	76	73	352	4404
16	0.065	1.08	57	55	264	5862
17	0.057	0.83	44	42	208	7620
18	0.050	0.64	34	32	160	9450
19	0.045	0.52	27	26	128	12255
20	0.040	0.41	21	20	104	14736

* Those marked with star are standard sizes for telegraph use.

Galvanized Telegraph and Telephone Wire.

TABLE OF SIZES AND WEIGHTS.

No.	4	wire, in	¼	-mile	bdls.,	730 lbs. per mile.
"	6	"	"	⅛	"	"	540	"
"	8	"	"	½	"	"	380	"
"	9	"	"	½	"	"	320	"
"	10	"	"	½	"	"	260	"
"	11	"	"	½	"	"	214	"
"	12	"	"	½	"	"	165	"
"	14	"	"	½	"	"	96	"

A running balance, and a standing balance, are different things.

In counterbalancing a steam engine it can be only balanced for one direction, and practice demonstrates that it is not possible to determine the weight that will give the best results in any other way than by actual trial.

WASHBURN & MOEN'S GAUGE.

Coiled Wire for Making Needles.

W. G.	Diameter Inch.	W. G.	Diameter Inch.	W. G.	Diameter Inch.
No.		No.		No.	
6	.192		.076		.053
7	.177		.075		.052
8	.162		.073		.050
9	.148	15	.072	18	.047
10	.135		.071		.046
11	.120		.069		.043
	.118		.065	19	.041
	.115		.064		.036
12	.105	16	.063	20	.035
13	.092		.062	21	.032
	.081		.057	22	.028
	.0805		.056	23	.025
14	.080		.055	24	.023
	.079	17	.054	25	.020

For very exact work, it is best to order both Drill Rods and Needle Wire in thousandths of an inch.

Sizes of American Wire Expressed in Fractions of an Inch.

(APPROXIMATE.)

No. 00000	$\frac{29}{64}$	No. 8 (small)	$\frac{5}{32}$
" 0000	$\frac{13}{32}$	" 10½	$\frac{1}{8}$
" 000	$\frac{23}{64}$	" 13	$\frac{3}{32}$
" 00	$\frac{21}{64}$	" 14 (small)	$\frac{5}{64}$
" 1 (small)	$\frac{9}{32}$	" 16 (full)	$\frac{1}{16}$
" 2	$\frac{17}{64}$	" 18 (full)	$\frac{3}{64}$
" 3 (full)	$\frac{1}{4}$	" 20½	$\frac{1}{32}$
" 5	$\frac{13}{64}$	" 28	$\frac{1}{64}$
" 6 (small)	$\frac{3}{16}$	" 36	$\frac{1}{128}$

Yards of Iron Wire to Bundle.

Wire Gauge.	Yards in Bundle.	Wire Guage.	Yards in Bundle.	Wire Gauge.	Yards in Bundle.
No. 0	71	No. 7	239	No. 14	1142
" 1	91	" 8	286	" 15	1468
" 2	105	" 9	342	" 16	1954
" 3	121	" 10	420	" 17	2540
" 4	143	" 11	529	" 18	3150
" 5	170	" 12	700	" 19	4085
" 6	203	" 13	893	" 20	4912

All Wires 63 lbs. per bundle.

KIRKALDY'S WIRE TABLES.

The Following Table is Given by Mr. David Kirkaldy, of London, to Exhibit the Tensile Strength and Resistance to Tension of Wire Made of Various Materials.

Specimens Tested.	Pulling Stress per Square Inch.		Specimens Tested.	Pulling Stress per Square Inch.	
	Hard. Lbs.	Annealed Lbs.		Hard. Lbs.	Annealed Lbs.
Copper	63.122	37.002	Phosphor Bronze, No. 1	159.515	58.853
Brass	81.156	51.550	" " No. 2	151.119	64.569
Charcoal Iron	65.834	46.60	" " No. 3	139.141	54.111
Coke Iron	65.321	61.294	" " No. 4	120.900	53.371
Steel	120.976	74.637			

Specimens Tested.	Extension per Cent.		No. Twists in 5 Inches.	Specimens Tested.	Extension per Cent.		No. Twists in 5 Inches.
	Anneal'd.	Hard.	Annealed.		Anneal'd.	Hard.	Annealed.
Copper	34.1	86.8	96	Phosphor Bronze, No. 1	46.6	13.3	66
Brass	36.5	14.7	57	" " No. 2	42.8	15.8	60
Charcoal Iron	28.	48.	87	" " No. 3	44.9	17.3	53
Coke Iron	17.	26.	44	" " No. 4	42.4	13.	124
Steel	10.9	*	79				

Of the eight pieces of steel tested, three stood from 40 to 45 twists, and five stood from 1½ to 4 twists.

Approximate Weight, per Thousand Feet, of Copper Braided Electric Light Line Wire.

BROWN & SHARPE'S GAUGE.

No.	Underwriters' Insulation.	Weather Proof Insulation.	No.	Underwriters' Insulation.	Weather Proof Insulation.
	Lbs.	Lbs.		Lbs.	Lbs.
00	450	425	10	50	45
0	350	330	11	40	35
1	290	270	12	28½	25
2	240	204	13	24	21
3	195	177	14	21	18
4	155	140	15	17	15
5	125	110	16	13	13
6	105	95	17	12	12
7	81	73	18	10	10
8	73	65	19	9	9
9	55	49	20	8½	8½

CHARACTERISTICS OF VARIOUS WOODS.

The following is a general statement of the commercial value and properties of the better known woods:

Elasticity.—Ash, hickory, hazel, lancewood, chestnut (small), yew, snakewood.

Elasticity and toughness —Oak, beech, elm, lignum-vitæ, walnut, hornbeam.

Even grain (for carving and engraving).—Pear, pine. box, lime tree.

Durability (in dry works).—Cedar, oak, poplar, yellow pine, chestnut.

Building (ship building).—Cedar, pine (deal), fir, larch, elm, oak, locust, teak. Wet construction (as piles, foundations, flumes, etc.—Elm, alder, beech, oak, plane tree, white cedar.—House building.—Pine, oak, whitewood, chestnut, ash, spruce, sycamore,

Machinery and millwork (frames).—Ash, beech, pine, elm, oak. Rollers, etc.—Box, lignum-vitæ, mahogany. Teeth of wheels —Crab tree, hornbeam, locust. Foundry patterns.—Alder, pine, mahogany.

Furniture (common).—Beech, birch, cedar, cherry, pine, whitewood. Best furniture.—Amboyna, black ebony, mahogany, cherry, maple, walnut, oak, rosewood, satinwood, sandalwood, chestnut, cedar, tulip wood, zebra wood, ebony.

Of these varieties, those that chiefly enter into commerce in this country are oak, hickory, ash, elm, cedar, black walnut, maple, cherry, butternut, etc.

The temperature of the water in a steam boiler is the same as that of the steam generated from it.

Number, Diameter, Weight, Length and Resistance of Pure Copper Wire.

BROWN & SHARPE'S GAUGE.

Number.	Diam.	Weight. Sp. Gr. —8.889		Length.	Resistance of Pure Copper at 70° Fahr.		
	Inches.	Grs. per Foot.	Lbs. per 1000 Ft.	Feet per lb.	Ohms per 1000 Feet.	Feet per Ohm.	Ohms per lb.
0000	.460	4475.33	639.33	1.56	.051	19605.69	.0000798
000	.40964	3549.07	507.01	1.97	.064	15547.87	.000127
00	.36480	2814.62	402.09	2.49	.081	12330.36	.000202
0	.32495	2233.28	319.04	3.13	.102	9783.63	.000320
1	.28930	1770.13	252.88	3.95	.129	7754.66	.00051
2	.25763	1403.79	200.54	4.99	.163	6149.78	.000811
3	.22942	1113.20	159.03	6.29	.205	4876.73	.001289
4	.20431	882.85	126.12	7.93	.259	3867.62	.00205
5	.18194	700.10	100.01	10.00	.326	3067.06	.00325
6	.16202	555.20	79.32	12.61	.411	2432.22	.00518
7	.14428	440.27	62.90	15.90	.519	1928.75	.00824
8	.12849	349.18	49.88	20.05	.654	1529.69	.01311
9	.11443	276.94	39.56	25.28	.824	1213.22	.02083
10	.10189	219.57	31.37	31.88	1.040	961.91	.03314
11	.09074	174.15	24.88	40.20	1.311	762.93	.05269
12	.08081	138.11	19.73	50.69	1.653	605.03	.08377
13	.07196	109.52	15.65	63.91	2.084	479.80	.13321
14	.06408	86.86	12.41	80.59	2.628	380.51	.2118
15	.05706	68.88	9.84	101.63	3.314	301.75	.3368
16	.05082	54.63	7.81	128.14	4.179	239.32	.5355
17	.04525	43.32	6.19	161.59	5.269	189.78	.8515
18	.04030	34.35	4.91	203.76	6.645	150.50	1.3539
19	.03589	26.49	3.78	264.26	8.617	116.05	2.2772
20	.03196	21.61	3.09	324.00	10.566	94.65	3.423
21	.02846	17.13	2.45	408.56	13.323	75.06	5.443
22	.025347	13.59	1.94	515.15	16.799	59.53	8.654
23	.022571	10.77	1.54	649.66	21.185	47.20	13.763
24	.0201	8.54	1.22	819.21	26.713	37.43	21.885
25	.0179	6.78	.97	1032.96	33.684	29.69	34.795
26	.01594	5.37	.77	1302.61	42.477	23.54	55.331
27	.014195	4.26	.61	1642.55	53.563	18.68	87.979
28	.012641	3.38	.48	2071.22	67.542	14.81	139.893
29	.011257	2.68	.38	2611.82	85.170	11.47	222.449
30	.010025	2.13	.30	3293.97	107.391	9.31	353.742
31	.008928	1.69	.24	4152.22	135.402	7.39	562.221
32	.00795	1.34	.19	5236.66	170.765	5.86	894.242
33	.00708	1.06	.15	6602.71	215.312	4.64	1421.646
34	.0063	.84	.12	8328.30	271.583	3.68	2261.82
35	.00561	.67	.10	10501.35	342.443	2.92	3596.104
36	.005	.53	.08	13238.83	431.712	2.32	5715.36
37	.00445	.42	.06	16691.06	544.287	1.84	9084.71
38	.003965	.34	.05	20854.65	686.511	1.46	14320.26
39	.003531	.27	.04	26302.23	865.046	1.16	22752.6
40	.003144	.21	.03	33175.94	1091.865	.92	36223 59

A cement composed of one-fourth of iron bi-hydrogen, and three-fourths of red lead, or white lead, will make wrought iron steam pipe joints perfectly tight.

AVERAGE NUMBER OF WASHERS IN A BOX OR KEG OF 150 LBS. OF STANDARD SIZES.

Diameter.	Size of Hole.	Thickness Wire Gauge Number.	Size of Bolt.	Number in 150 Lbs.
½	¼	18	3/16	80,000
5/8	5/16	16	¼	34,285
¾	5/16	16	¼	22,000
7/8	3/8	16	5/16	18,500
1	7/16	14	3/8	10,550
1¼	½	14	7/16	7,500
1⅜	9/16	12	½	4,500
1½	5/8	12	9/16	3,850
1¾	11/16	10	5/8	2,500
2	13/16	10	¾	1,600
2¼	15/16	9	7/8	1,300
2½	1 1/16	9	1	950
2¾	1¼	9	1⅛	700
3	1⅜	9	1¼	550
3½	1½	9	1⅜	450

Standard List of Wrought Iron Washers.

Width.	Holes.	Thickness.	Size of Bolt.
9/16	¼	No. 18	3/16
¾	5/16	" 16	¼
7/8	3/8	" 16	5/16
1	7/16	" 14	3/8
1¼	½	" 14	7/16
1⅜	9/16	" 12	½
1½	5/8	" 12	9/16
1¾	11/16	" 10	5/8
2	13/16	" 10	¾
2¼	15/16	" 9	7/8
2½	1 1/16	" 9	1
2¾	1¼	" 9	1⅛
3	1¾	" 9	1¼
3¼	1½	" 8	1⅜
3½	1⅝	" 8	1½
3¾	1¾	" 8	1⅝
4	1⅞	" 8	1¾
4¼	2	" 8	1⅞
4½	2⅛	" 8	2

One or two quarts of crude petroleum introduced into a boiler will remove the scale. Use the boiler exactly as if no oil were present. One quart would be about sufficient for a 50-horse power boiler.

Velocity and Force of the Wind.

Description.	Miles per Hour.	Feet per Minute.	Feet per Second.	Force in lbs. per sq. ft.
Hardly perceptible	1	88	1.47	.005
Just perceptible	2	176	2.93	.020
	3	264	4.40	.044
Gentle breeze	4	352	5.87	.079
	5	440	7.33	.123
Pleasant breeze	10	880	14.67	.492
	15	1320	22.0	1 107
Brisk gale	20	1760	29.3	1.968
	25	2200	36.6	3.075
High wind	30	2640	44.0	4.428
	35	3080	51.3	6.027
Very high wind	40	3520	58.6	7.872
	45	3960	66.0	9.963
Storm	50	4400	73.3	12.300
Great storm	60	5280	88.0	17.712
	70	6160	102.7	24.108
Hurricane	80	7040	117.3	31.488
	100	8800	146.6	49.200

WATER.

A U. S. standard gallon holds 231 cubic inches, and 8⅓ pounds of water at 62 deg. Fahr.

A British imperial gallon holds 277.274 cubic inches, and 10 pounds of water at 62 deg. Fahr.

Sea water (average) has a specific gravity of 1.028, boils at 213.2 degrees Fahr., and weighs 64 pounds per cubic foot at 62 deg. Fahr.

A British thermal unit is that quantity of heat which will raise one pound of water at the freezing point, one degree Fahr.

According to B. F. Sturtevant, a column of water $27\frac{672}{1000}$ inches in height will give a pressure of one pound to the square inch.

Water at Different Temperatures.

Freezing point at sea level	32 deg. Fahr.
Point of maximum density	39.1 " "
British standard for specific gravity	62 " "
Boiling point at sea level	212 " "
Weight per cu. ft. at 32 deg. Fahr	62.418 lbs.
" " 39.1 " "	62.425 "
" " 62 " "	62.355 "
" " 212 " "	59.760 "
Weight per cu. in at 32 " "	.03612 "
" " 39.1 " "	.036125 "
" " 62 " "	.03608 "
" " 212 " "	.03458 "

Boiling Point of Water.

Barometer at 31 inches	213.57°
" " 29 "	210.38°
" " 28 "	208.69°
" " 27 "	206.85°
" in vacuo	88°

PRESSURE OF WATER.

The pressure of water in pounds per square inch for every foot in height to 300 feet; and then by intervals, to 1000 feet head. By this table, from the pounds pressure per square inch, the feet head is readily obtained; and *vice versa*.

Feet Head	Pressure per square inch.	Feet Head	Pressure per square inch.	Feet Head	Pressure per square inch.	Feet Head	Pressure per square inch.	Feet Head	Pressure per square inch.
1	0.43	65	28.15	129	55.88	193	83.60	257	111.32
2	0.86	66	28.58	130	56.31	194	84.03	258	111.76
3	1.30	67	29.02	131	56.74	195	84.47	259	112.19
4	1.73	68	29.45	132	57.18	196	84.90	260	112.62
5	2.16	69	29.88	133	57.61	197	85.33	261	113.06
6	2.59	70	30.32	134	58.04	198	85.76	262	113.49
7	3.03	71	30.75	135	58.48	199	86.20	263	113.92
8	3.46	72	31.18	136	58.91	200	86.63	264	114.36
9	3.89	73	31.62	137	59.34	201	87.07	265	114.79
10	4.33	74	32.05	138	59.77	202	87.50	266	115.22
11	4.76	75	32.48	139	60.21	203	87.93	267	115.66
12	5.20	76	32.92	140	60.64	204	88.36	268	116.09
13	5.63	77	33.35	141	61.07	205	88.80	269	116.52
14	6.06	78	33.78	142	61.51	206	89.23	270	116.96
15	6.49	79	34.21	143	61.94	207	89.66	271	117.39
16	6.93	80	34.65	144	62.37	208	90.10	272	117.82
17	7.36	81	35.08	145	62.81	209	90.53	273	118.26
18	7.79	82	35.52	146	63.24	210	90.96	274	118.69
19	8.22	83	35.95	147	63.67	211	91.39	275	119.12
20	8.66	84	36.39	148	64.10	212	91.83	276	119.56
21	9.09	85	36.82	149	64.54	213	92.26	277	119.99
22	9.53	86	37.25	150	64.97	214	92.69	278	120.42
23	9.96	87	37.68	151	65.40	215	93.13	279	120.85
24	10.39	88	38.12	152	65.84	216	93.56	280	121.29
25	10.82	89	38.55	153	66.27	217	93.99	281	121.72
26	11.26	90	38.98	154	66.70	218	94.43	282	122.15
27	11.69	91	39.42	155	67.14	219	94.86	283	122.59
28	12.12	92	39.85	156	67.57	220	95.30	284	123.02
29	12.55	93	40.28	157	68.00	221	95.73	285	123.45
30	12.99	94	40.72	158	68.43	222	96.16	286	123.89
31	13.42	95	41.15	159	68.87	223	96.60	287	124.32
32	13.86	96	41.58	160	69.31	224	97.03	288	124.75
33	14.29	97	42.01	161	69.74	225	97.46	289	125.18
34	14.72	98	42.45	162	70.17	226	97.90	290	125.62
35	15.16	99	42.88	163	70.61	227	98.33	291	126.05
36	15.59	100	43.31	164	71.04	228	98.76	292	126.48
37	16.02	101	43.75	165	71.47	229	99.20	293	126.92
38	16.45	102	44.18	166	71.91	230	99.63	294	127.35
39	16.89	103	44.61	167	72.34	231	100.06	295	127.78
40	17.32	104	45.05	168	72.77	232	100.49	296	128.22
41	17.75	105	45.48	169	73.20	233	100.93	297	128.65
42	18.19	106	45.91	170	73.64	234	101.36	298	129.08
43	18.62	107	46.34	171	74.07	235	101.79	299	129.51
44	19.05	108	46.78	172	74.50	236	102.23	300	129.95
45	19.49	109	47.21	173	74.94	237	102.66	310	134.28
46	19.92	110	47.64	174	75.37	238	103.09	320	138.62
47	20.35	111	48.08	175	75.80	239	103.53	330	142.95
48	20.79	112	48.51	176	76.23	240	103.96	340	147.28
49	21.22	113	48.94	177	76.67	241	104.39	350	151.61
50	21.65	114	49.38	178	77.10	242	104.83	360	155.94
51	22.09	115	49.81	179	77.53	243	105.26	370	160.27
52	22.52	116	50.24	180	77.97	244	105.69	380	164.61
53	22.95	117	50.68	181	78.40	245	106.13	390	168.94
54	23.39	118	51.11	182	78.84	246	106.56	400	173.27
55	23.82	119	51.54	183	79.27	247	106.99	500	216.58
56	24.26	120	51.98	184	79.70	248	107.43	600	259.90
57	24.69	121	52.41	185	80.14	249	107.86	700	303.22
58	25.12	122	52.84	186	80.57	250	108.29	800	346.54
59	25.55	123	53.28	187	81.00	251	108.73	900	389.86
60	25.99	124	53.71	188	81.43	252	109.16	1000	433.18
61	26.42	125	54.15	189	81.87	253	109.59		
62	26.85	126	54.58	190	82.30	254	110.03		
63	27.29	127	55.01	191	82.73	255	110.46		
64	27.72	128	55.44	192	83.17	256	110.89		

To Find the Horse Power of Water Flowing in Streams.

RULE: Multiply the velocity of the current in feet per minute, by the cross-section area of the stream of water in square feet, and this product by 62.3. Divide the result thus obtained by 33,000, and the quotient will be the horse power.

Strength of Brick Walls.

For first-class buildings with good workmanship, the general average should not exceed a greater number of feet in height than three times the thickness of the wall in inches, and the length not to exceed double the height, without lateral supports of walls, buttresses, etc., as follows, for safety:

Thickness.	Safe Height.	Length.
8½ inch walls	25 feet	50 feet
13 " "	40 "	80 "
17 " "	55 "	110 "
22 " "	66 "	130 "
26 " "	78 "	150 "

Relative Hardness of Wood.

Hickory	100
Pignut Hickory	96
White oak	84
White ash	77
Dogwood	75
Scrub oak	73
White hazel	72
Apple tree	70
Red oak	69
White beech	65
Black walnut	65
Black birch	62
Yellow and black oak	60
Hard maple	56
White elm	58
Red cedar	56
Cherry	55
Yellow pine	54
Chestnut	52
Yellow poplar	51
Butternut	43
White birch	43
White pine	35

DRIVING WHEELS.

Number of Revolutions per Mile.

Diameter of wheel	2 ft.	2½ ft.	3 ft.	3½ ft.	4 ft.	4½ ft.	5 ft.
Revolutions per mile	840	672	560	480	420	373	336
Diameter of wheel	5½ ft.	6 ft.	6½ ft.	7 ft.	8 ft.	9 ft.	10 ft.
Revolutions per mile	305½	280	258½	240	210	187	168

BUFFALO EXHAUST DISK WHEELS.

Showing Cubic Feet of Air Removed by Exhaust Wheel per Minute.

NUMBER OF REVOLUTIONS OF WHEEL PER MINUTE.	AMOUNT OF AIR THROWN IN CUBIC FEET PER MINUTE.							
	24 Inch.	30 Inch.	36 Inch.	42 Inch.	48 Inch.	54 Inch.	60 Inch.	72 Inch.
100	.....	.....	.....	.....	4,245	6,059	8,387	14,936
110	.....	.....	.....	.....	4,676	6,665	9,258	16,506
120	.....	.....	.....	.....	5,100	7,278	10,137	18,000
130	.....	.....	.....	.....	5,530	7,897	11,024	19,688
140	.....	.....	.....	.....	5,965	8,522	11,919	21,300
150	....	.....	.....	.....	6,405	9,154	12,822	22,926
160	.....	.....	.....	.....	6,851	9,792	13,733	24,566
170	.....	.....	.....	.....	7,302	10,437	14,652	26,220
180	.....	.....	.....	5,038	7,758	11,008	15,579	27,880
190	.....	.....	.....	5,321	8,219	11,746	16,514	29,570
200	.....	.....	3,594	5,607	8,686	12,410	17,457	31,267
210	.....	.....	3,779	5,896	9,158	13,088	18,407	32,976
220	.....	2,341	3,966	6,188	9,635	13,764	19,367	34,700
230	.....	2,457	4,155	6,482	10,117	14,447	20,334	36,438
240	.....	2,575	4,347	6,779	10,605	15,136	21,309	38,190
250	1,307	2,696	4,541	7,079	11,098	15,822	22,292	39,956
260	1,444	2,819	4,738	7,382	11,596	16,534	23,283	41,736
270	1,502	2,945	4,937	7,688	12,099	17,243	24,282	43,530
280	1,561	3,074	5,139	7,906	12,609	17,958	25,289	45,338
290	1,622	3,205	5,343	8,307	13,122	18,680	26,304	47,160
300	1,684	3,338	5,550	8,621	13,641	19,408	27,327	48,996
310	1,747	3,474	5,759	8,938	14,165	20,143	28,358	50,846
320	1,812	3,612	5,971	9,258	14,695	20,884	29,397	52,710
330	1,878	3,753	6,185	9,580	15,230	21,632	30,444	54,588
340	1,945	3,896	6,402	9,905	15,770	22,386	31,499	56,480
350	2,014	4,042	6,621	10,233	16,315	23,147	32,565	58,386
360	2,083	4,190	6,843	10,564	16,865	23,914	33,633	60,306
370	2,154	4,344	7,067	10,898	17,421	24,688	34,712	62,240
380	2,227	4,494	7,294	11,234	17,982	25.468	35.799	64,180
390	2,300	4,650	7,523	11,573	18,508	26,255	36,894	66,103
400	2,375	4,808	7,755	11,915	19,119	27.048	37,997	67,985
410	2,452	4,969	7,989	12,260	19,696	27,748	39,108	69.834
420	2,529	5,132	8,221	12,608	20.278	28,654	40,227	71.650
430	2,608	5,298	8,464	12,958	20,865	29,467	41,354	73,433
440	2,688	5,466	8,706	13,311	21,457	30,286	42,489	75,183
450	2,770	5,636	8,950	13,967	22,055	31,112	43,632	76,900
460	2.853	5,808	9,197	14,026	22,658	31,944	44,783	78,584
470	2,937	5,982	9,446	14,388	23,268	32,783	45,942	80,235
480	3,022	6,158	9,699	14,752	23,884	33,628	47,109	81,853
490	3,109	6,336	9,953	15,119	24,503	34,480	48,284	.....
500	3,197	6,516	10,210	15,489	25 127	35,338	49,467	.....
510	3,286	6,698	10,470	15,862	25.755	36,203	50,640	.....
520	3,376	6,882	10,632	16,238	26,390	37,074	51,795	.....
530	3,468	7,068	10,897	16,616	27,030	37,952	52,632	.....
540	3,561	7,256	11,162	16,997	27,675	38,836	54,051	.....
550	3,656	7,446	11,430	17,381	28,325	39,727	55,152	.....
560	3,752	7,638	11,702	17,768	28,980	40,624	56,235	.....
570	3.849	7,832	11,976	18,158	29,640	41,528	57,300	.....
580	3,947	8,028	12,254	18,550	30,283	42,438	58,347	.....
590	4,047	8,226	12,534	18,945	30,909	43,355	59,376	.....
600	4,148	8,426	12,816	19,345	31,518	44,277	60,401	.....
610	4,250	8,628	13,101	19,744	32,110	45,208	.....	.....
620	4,354	8,832	13,388	20,148	32,685	46,144	.....	.....
630	4,459	9,038	13.678	20,554	33,243	47,087	.....	.....
640	4,565	9,246	13,970	20,963	33.784	48,036	.....	.....
650	4,671	9,456	14,265	21,375	34,310	48.992	.....	.....
660	4,779	9,668	14.562	21,790	34,836	49,954	.....	.....
670	4,888	9,882	14,862	22,202	35,362	50,923	.....	.....
680	4,998	10,098	15,164	22,611	35,888	51,898	.....	.....
690	5,109	10,316	15,469	23,017	36,414	52,880	.....	.....
700	5,221	10,536	15,776	23,420	36,940	53,858	.....	.....

The air we breathe consists of oxygen and nitrogen in the relative bulks of 20.90 of the former, to 79.10 of the latter; or by weight 23.10 of oxygen to 70.90 of nitrogen.

Table of Capacity of Large Fan Wheels.

Diam. of Wheel.	Pressure of Blast.	Revolutions.	CUBIC FEET OF AIR.		HORSE POWER.	
			Narrow.	Wide.	Narrow.	Wide.
6 Feet	¼ oz.	137	12058	15503	1.23	1.58
	½ "	193	17068	21945	3.49	4.48
	¾ "	237	20915	27091	5.60	7.33
	1 "	273	24144	31043	9.87	12.70
7 Feet	¼ oz.	117	15718	21102	1.61	2.15
	½ "	166	22250	29870	4.55	6.10
	¾ "	203	27264	36601	7.44	9.98
	1 "	235	31474	42253	12.74	17.28
8 Feet	¼ oz.	102	20671	27561	2.11	2.82
	½ "	145	29260	39014	5.98	7.97
	¾ "	177	35854	47806	9.77	13.03
	1 "	205	41391	55188	16.93	22.57
9 Feet	¼ oz.	91	25839	34883	2.64	3.57
	½ "	128	36576	49377	7.38	10.09
	¾ "	158	44818	60505	12.22	16.69
	1 "	182	51739	69877	21.16	28.57
10 Feet	¼ oz.	82	32300	43065	3.34	4.40
	½ "	116	45720	60960	9.34	12.46
	¾ "	142	56023	74697	15.45	20.36
	1 "	164	64674	86232	26.46	35.28
12 Feet	¼ "	68	46510	62014	4.75	6.34
	½ "	96	65836	87776	13.46	17.95
	¾ "	118	80673	107564	22.00	29 32
	1 "	136	93130	124174	38.10	50.80
14 Feet	¼ "	58	63306	84336	6.47	8.62
	½ "	82	89611	119380	18.31	24.41
	¾ "	101	109805	146282	29.94	39.89
	1 "	117	126761	168071	51.86	68.09
16 Feet	¼ oz.	51	82685	110247	8.46	11.28
	½ "	72	117043	156057	23.95	31.91
	¾ "	89	143419	191225	39.11	52 15
	1 "	102	165565	220753	67.73	90.31

Sizes and Weights of Cast Iron Tramway Wheels.

SPOKE WHEELS.

Diam.	No. of Spokes.	Tread.	Weight.	Diam.	No of Spokes.	Tread.	Weight.
20″	8	3⅜″	106 lbs.	14″	6	3⅜″	98 lbs.
18	5	3½	91 "	13	4	4¼	50 "
18	5	3⅜	102 "	12	6	3½	52 "
18	5	3⅜	93 "	12	6	2½	36 "
18	5	3⅜	95 "	12	6	2½	31 "
18	5	3⅜	87 "	12	5	2½	27 "
18	5	3⅜	77 "	10	6	3	29 "
17	6	3⅝	92 "	10	6	3	38 "
17	6	3½	72 "	10	6	2⅝	23 "
16	5	3¼	87 "	10	5	3	34 "
16	5	3¼	80 "	9¾	6	1½	19 "
16	5	3	56 "				

Plate Wheels.

Diam.	No. of Spokes.	Tread.	Weight.	Diam.	No. of Spokes.	Tread.	Weight.
19″	6	2¼″	40	16	6	2¼	42
17	6	2	28	12	6	2¼	19
17	6	2	14				

Spoke Wheels Without Flanges.

Diam.	Tread.	Weight.	Diam.	Tread.	Weight.
18″	3⅜″	145 lbs.	12	6	84 lbs.
16	3	140 "	12	3	46 "
14	4	169 "	12	3⅛	85 "

When wheels are to be pressed on their axles, an iron of medium hardness should be used. If too hard, the hub is apt to split; if too soft, the hub will "fuller" in a short time and become loose. Scrap iron makes a cheap, and at the same time, a poor wheel.

RATE OF WAGES TABLE.

35 Cents per Hour.

Hours.	Amount.	Hours.	Amount.	Hours.	Amount.	Hours.	Amount
½	$0.18						
1	0.35	16	$5.60	31	$10.85	46	$16.10
1½	0.53	16½	5.78	31½	11.03	46½	16.28
2	0.70	17	5.95	32	11.20	47	16.45
2½	0.88	17½	6.13	32½	11.38	47½	16.63
3	1.05	18	6.30	33	11.55	48	16.80
3½	1.23	18½	6.48	33½	11.73	48½	16.98
4	1.40	19	6.65	34	11.90	49	17.15
4½	1.58	19½	6.83	34½	12.08	49½	17.33
5	1.75	20	7.00	35	12.25	50	17.50
5½	1.93	20½	7.18	35½	12.43	50½	17.68
6	2.10	21	7.35	36	12.60	51	17.85
6½	2.28	21½	7.53	36½	12.78	51½	18.03
7	2.45	22	7.70	37	12.95	52	18.20
7½	2.63	22½	7.88	37½	13.13	52½	18.38
8	2.80	23	8.05	38	13.30	53	18.55
8½	2.98	23½	8.23	38½	13.48	53½	18.73
9	3.15	24	8.40	39	13.65	54	18.90
9½	3.33	24½	8.58	39½	13.83	54½	19.08
10	3.50	25	8.75	40	14.00	55	19.25
10½	3.68	25½	8.93	40½	14.18	55½	19.43
11	3.85	26	9.10	41	14.35	56	19.60
11½	4.03	26½	9.28	41½	14.53	56½	19.78
12	4.20	27	9.45	42	14.70	57	19.95
12½	4.38	27½	9.63	42½	14.88	57½	20.13
13	4.55	28	9.80	43	15.05	58	20.30
13½	4.73	28½	9.98	43½	15.23	58½	20.48
14	4.90	29	10.15	44	15.40	59	20.65
14½	5.08	29½	10.33	44½	15.58	59½	20.83
15	5.25	30	10.50	45	15.75	60	21.00
15½	5.43	30½	10.68	45½	15.93		

Eelskins make the best possible strings for lacing belts. One lace will outlast any belt, and will stand wear and hard usage where hooks or any other fastenings fail.

Rate of Wages Table—*Continued.*

37½ CENTS PER HOUR.

Hours.	Amount.	Hours.	Amount.	Hours.	Amount.	Hours.	Amount.
½	$0.19						
1	0.38	16	$6.00	31	$11.63	46	$17.25
1½	0.56	16½	6.19	31½	11.81	46½	17.44
2	0.75	17	6.38	32	12.00	47	17.63
2½	0.94	17½	6.56	32½	12.19	47½	17.81
3	1.13	18	6.75	33	12.38	48	18.00
3½	1.31	18½	6.94	33½	12.56	48½	18.19
4	1.50	19	7.13	34	12.75	49	18.38
4½	1.69	19½	7.31	34½	12.94	49½	18.56
5	1.88	20	7.50	35	13.13	50	18.75
5½	2.06	20½	7.69	35½	13.31	50½	18.94
6	2.25	21	7.88	36	13.50	51	19.13
6½	2.44	21½	8.06	36½	13.69	51½	19.31
7	2.63	22	8.25	37	13.88	52	19.50
7½	2.81	22½	8.44	37½	14.06	52½	19.69
8	3.00	23	8.63	38	14.25	53	19.88
8½	3.19	23½	8.81	38½	14.43	53½	20.06
9	3.38	24	9.00	39	14.62	54	20.25
9½	3.56	24½	9.19	39½	14.81	54½	20.44
10	3.75	25	9.38	40	15.00	55	20.63
10½	3.94	25½	9.56	40½	15.19	55½	20.81
11	4.13	26	9.75	41	15.38	56	21.00
11½	4.31	26½	9.94	41½	15.56	56½	21.19
12	4.50	27	10.13	42	15.75	57	21.38
12½	4.69	27½	10.31	42½	15.94	57½	21.56
13	4.88	28	10.50	43	16.13	58	21.75
13½	5.06	28½	10.69	43½	16.31	58½	21.94
14	5.25	29	10.88	44	16.50	59	22.13
14½	5.44	29½	11.06	44½	16.69	59½	22.31
15	5.63	30	11.25	45	16.88	60	22.50
15½	5.81	30½	11.44	45½	17.06		

The art of cutting diamonds was long practiced in India and China, but was not known in Europe till after the fifteenth century, when it was discovered by Louis Van Berguen, of Bruges.

Rate of Wages Table.—*Continued.*

55 CENTS PER HOUR.

Hours.	Amount.	Hours.	Amount.	Hours.	Amount.	Hours.	Amount
½	$0.28						
1	0.55	16	$8.80	31	$17.05	46	$25.30
1½	0.83	16½	9.08	31½	17.33	46½	25.58
2	1.10	17	9.35	32	17.60	47	25.85
2½	1.38	17½	9.63	32½	17.88	47½	26.13
3	1.65	18	9.90	33	18.15	48	26.40
3½	1.93	18½	10.18	33½	18.43	48½	26.68
4	2.20	19	10.45	34	18.70	49	26.95
4½	2.48	19½	10.73	34½	18.98	49½	27.23
5	2.75	20	11.00	35	19.25	50	27.50
5½	3.03	20½	11.28	35½	19.53	50½	27.78
6	3.30	21	11.55	36	19.80	51	28.05
6½	3.58	21½	11.83	36½	20.08	51½	28.33
7	3.85	22	12.10	37	20.35	52	28.60
7½	4.13	22½	12.38	37½	20.63	52½	28.88
8	4.40	23	12.65	38	20.90	53	29.15
8½	4.68	23½	12.93	38½	21.18	53½	29.43
9	4.95	24	13.20	39	21.45	54	29.70
9½	5.23	24½	13.48	39½	21.73	54½	29.98
10	5.50	25	13.75	40	22.00	55	30.25
10½	5.78	25½	14.03	40½	22.28	55½	30.53
11	6.05	26	14.30	41	22.55	56	30.80
11½	6.33	26½	14.58	41½	22.83	56½	31.08
12	6.60	27	14.85	42	23.10	57	31.35
12½	6.88	27½	15 13	42½	23.38	57½	31.63
13	7.15	28	15.40	43	23.65	58	31.90
13½	7.43	28½	15.68	43½	23.93	58½	32.18
14	7.70	29	15.95	44	24.20	59	32.45
14½	7.98	29½	16.23	44½	24.48	59½	32.73
15	8.25	30	16.50	45	24.75	60	33.00
15½	8.53	30½	16.78	45½	25.03		

Rate of Wages Table.—*Continued.*

60 CENTS PER HOUR.

Hours.	Amount.	Hours.	Amount.	Hours.	Amount.	Hours.	Amount
½	$0.30						
1	0.60	16	$9.60	31	$18.60	46	$27.60
1½	0.90	16½	9.90	31½	18.90	46½	27.90
2	1.20	17	10.20	32	19.20	47	28.20
2½	1.50	17½	10.50	32½	19.50	47½	28.50
3	1.80	18	10.80	33	19.80	48	28.80
3½	2.10	18½	11.10	33½	20.10	48½	29.10
4	2.40	19	11.40	34	20.40	49	29.40
4½	2.70	19½	11.70	34½	20.70	49½	29.70
5	3.00	20	12.00	35	21.00	50	30.00
5½	3.30	20½	12.30	35½	21.30	50½	30.30
6	3.60	21	12.60	36	21.60	51	30.60
6½	3.90	21½	12.90	36½	21.90	51½	30.90
7	4.20	22	13.20	37	22.20	52	31.20
7½	4.50	22½	13.50	37½	22.50	52½	31.50
8	4.80	23	13.80	38	22.80	53	31.80
8½	5.10	23½	14.10	38½	23.10	53½	32.10
9	5.40	24	14.40	39	23.40	54	32.40
9½	5.70	24½	14.70	39½	23.70	54½	32.70
10	6.00	25	15.00	40	24.00	55	33.00
10½	6.30	25½	15.30	40½	24.30	55½	33.30
11	6.60	26	15.60	41	24.60	56	33.60
11½	6.90	26½	15.90	41½	24.90	56½	33.90
12	7.20	27	16.20	42	25.20	57	34.20
12½	7.50	27½	16.50	42½	25.50	57½	34.50
13	7.80	28	16.80	43	25.80	58	34.80
13½	8.10	28½	17.10	43½	26.10	58½	35.10
14	8.40	29	17.40	44	26.40	59	35.40
14½	8.70	29½	17.70	44½	26.70	59½	35.70
15	9.00	30	18.00	45	27.00	60	36.00
15½	9.30	30½	18.30	45½	27.30		

Lead in contact with steam under pressure of over 10 lbs. per square inch very soon loses its strength, and it is therefore good neither for packing joints nor for conveying steam.

Rate of Wages Table—*Continued.*

62½ CENTS PER HOUR.

Hours.	Amount.	Hours.	Amount.	Hours.	Amount.	Hours.	Amount.
½	$0.31						
1	0.63	16	$10.00	31	$19.38	46	$28.75
1½	0.94	16½	10.31	31½	19.69	46½	29.06
2	1.25	17	10.63	32	20.00	47	29.38
2½	1.56	17½	10.94	32½	20.31	47½	29.69
3	1.88	18	11.25	33	20.63	48	30.00
3½	2.19	18½	11.56	33½	20.94	48½	30.31
4	2.50	19	11.88	34	21.25	49	30.63
4½	2.81	19½	12.19	34½	21.56	49½	30.94
5	3.13	20	12.50	35	21.88	50	31.25
5½	3.44	20½	12.81	35½	22.19	50½	31.56
6	3.75	21	13.13	36	22.50	51	31.88
6½	4.06	21½	13.44	36½	22.81	51½	32.19
7	4.38	22	13.75	37	23.13	52	32.50
7½	4.69	22½	14.06	37½	23.44	52½	32.81
8	5.00	23	14.38	38	23.75	53	33.13
8½	5.31	23½	14.69	38½	24.06	53½	33.44
9	5.63	24	15.00	39	24.38	54	33.75
9½	5.94	24½	15.31	39½	24.69	54½	34.06
10	6.25	25	15.63	40	25.00	55	34.38
10½	6.56	25½	15.94	40½	25.31	55½	34.69
11	6.88	26	16.25	41	25.63	56	35.00
11½	7.19	26½	16.56	41½	25.94	56½	35.31
12	7.50	27	16.88	42	26.25	57	35.63
12½	7.81	27½	17.19	42½	26.56	57½	35.94
13	8.13	28	17.50	43	26.88	58	36.25
13½	8.44	28½	17.81	43½	27.19	58½	36.56
14	8.75	29	18.13	44	27.50	59	36.88
14½	9.06	29½	18.44	44½	27.81	59½	37.19
15	9.38	30	18.75	45	28.13	60	37.50
15½	9.69	30½	19.06	45½	28.44		

The invention of drawing wire is ascribed to Rodolph of Nuremberg, in A. D. 1410.

Rate of Wages Table—*Continued.*

65 CENTS PER HOUR.

Hours.	Amount.	Hours.	Amount.	Hours.	Amount.	Hours.	Amount.
½	$0.33						
1	0.65	16	$10 40	31	$20.15	46	$29.90
1½	0.98	16½	10.73	31½	20.48	46½	30.23
2	1.30	17	11.05	32	20.80	47	30.55
2½	1.63	17½	11.38	32½	21.13	47½	30.88
3	1.95	18	11.70	33	21.45	48	31.20
3½	2.28	18½	12.03	33½	21.78	48½	31.53
4	2.60	19	12.35	34	22.10	49	31.85
4½	2.93	19½	12.68	34½	22.43	49½	32.18
5	3.25	20	13.00	35	22.75	50	32.50
5½	3.58	20½	13.33	35½	23.08	50½	32.83
6	3.90	21	13.65	36	23.40	51	33.15
6½	4.23	21½	13.98	36½	23.73	51½	33.48
7	4.55	22	14.30	37	24.05	52	33.80
7½	4.88	22½	14.63	37½	24.38	52½	34.13
8	5.20	23	14 95	38	24.70	53	34.45
8½	5.53	23½	15 28	38½	25.03	53½	34.78
9	5.85	24	15.60	39	25.35	54	35.10
9½	6.18	24½	15.93	39½	25.68	54½	35.43
10	6.50	25	16.25	40	26.00	55	35.75
10½	6.83	25½	16.58	40½	26 33	55½	36.08
11	7.15	26	16.90	41	26.65	56	36.40
11½	7.48	26½	17.23	41½	26.98	56½	36.73
12	7.80	27	17.55	42	27.30	57	37.05
12½	8.13	27½	17.88	42½	27.63	57½	37.38
13	8.45	28	18.20	43	27.95	58	37.70
13½	8.78	28½	18.53	43½	28.28	58½	38.03
14	9.10	29	18 85	44	28.60	59	38.35
14½	9.43	29½	19.18	44½	28.93	59½	38.68
15	9.75	30	19.50	45	29.25	60	39.00
15½	10.08	30½	19.83	45½	29.58		

In the first century B.C., Nicomedes invented a conchoid curve for the purpoes of bisecting an angle.

DIAMETERS AND REVOLUTIONS OF DIFFERENT KINDS OF EMERY WHEELS.

VITRIFIED WHEEL.			VULCANITE WHEEL.	
Diam. in Inches.	Revolutions per Minute.		Diam. in Inches.	Revolutions per Minute.
	Minimum.	Maximum.		
1	13000	18000	1½	15000 to 24000
1½	10500	14000	2	15000 to 24000
2	7900	11000	2½	10000 to 16000
2½	6330	8800	3	8250 to 13400
3	5275	7400	3½	7250 to 11600
3½	4500	6300	4	6250 to 10000
4	3950	5500	5	5000 to 8000
4½	3500	4900	6	4200 to 6688
5	3160	4400	6½	3850 to 6170
6	2640	3700	7½	3350 to 5348
7	2260	3160	8	3150 to 5045
8	1980	2770	8½	2950 to 4726
9	1760	2460	9½	2650 to 4222
10	1580	2210	10½	2450 to 3820
12	1320	1850	12	2100 to 3344
14	1130	1580	14	1800 to 2870
16	990	1380	16	1550 to 2508
18	880	1230	18	1400 to 2230
20	790	1100	20	1250 to 2006
22	720	1000	22	1150 to 1840
24	660	920	24	1050 to 1672
26	600	850	26	950 to 1542
30	500	735	30	835 to 1336
			36	700 to 1116
			48	525 to 840

In ordering an emery wheel always state whether the wheel is to run dry, or in water. Keep the wheel "true." It will last twice as long if you do so. Emery wheels sometimes burst when they are treated badly. Give the wheel a chance before you condemn the manufacturer. Every bad effect has its cause. In the case of emery wheels it is generally ill usage.

Emery Wheels.—*Continued.*

MECHANICAL.		CELLULOID.		CHEMICAL.	
Diam. in Inches.	Revolutions per Minute.	Diam. in Inches.	Revolutions per Minute.	Diam. in Inches.	Revolutions per Minute.
1½	10000	¾			
2	10000	1			
2½	8000	1½		1½	14400
3	6000	2		2	10800
3½	5000	2½		2½	8640
4	4500	3	7400	3	7200
4½	4000	3½	6425	4	5400
5	3700	4	5450	5	4320
6	3200	5	4400	6	3600
7	2700	6	3600	7	3086
8	2400	7	3150	7½	2880
9	2100	8	2750	8	2700
10½	1800	9	2450	9	2400
12	1600	10	2200	10	2150
14	1350	12	1850	12	1800
16	1200	14	1600	14	1570
18	1050	16	1400	16	1350
20	950	18	1250	18	1222
22	900	20	1100	20	1080
24	850	22	1000	22	1000
26	750	24	925	24	917
30	700			26	611
36	550				

CUP WHEELS.	
8	1200
9	1000
12	800
14	700
16	600
18	500
20	450
24	400

The Vitrified Wheel is composed of clay and emery, in different proportions, hardened to vitrifaction in a kiln like crockery ware. The vulcanite is composed of emery and rubber vulcanized.

The Celluloid is a composition of gun-cotton and camphor mixed with emery, and hardened at a low temperature.

The mechanical wheel is made a flux, of which the foundation is linseed oil, and is hardened under 300 degrees of heat. The chemical wheel is made

by using chemicals that harden into a sort of artificial stone when mixed with emery.

"The centrifugal force of a body, moving with different velocities in the same circle, is proportional to the square of the velocity. Thus the centrifugal force of a body making 10 revolutions in a minute is four times as great as the centrifugal force of the same body making five revolutions in a minute. Hence in equal circles the forces are inversely as the squares of the times of revolution."

The centrifugal force evolved by an emery wheel in motion is, as the square of its velocity; hence a wheel of any given size is subject to four times the breaking strain at 2,000 revolutions that it is at 1,000, and at intermediate rates, of course, in proportion.

Experience has demonstrated beyond controversy that, taking into account safety, durability, and liability to heat, 5,500 feet per minute at the periphery, or outer surface, gives the best results.

EXAMPLES:

Wheel 10″ diam. squared = 100 } centrifugal force
" 5″ " " = 25 } equals 4 times.
" 12″ " " = 144 } centrifugal force
" 8″ " " = 64 } equals 2¼ times.
" 12″ " " = 144 } centrifugal force
" 4″ " " = 16 } equals 9 times.

APPROXIMATE WEIGHT OF SHEET ZINC.

Zinc Numbers.	Weight per Square Foot.	Thickness in Decimals of an Inch.	About Equal to Stubs' Gauge.	About Equal to B. & S. Gauge.
5	.37	.010 ($\frac{1}{100}$)	31	30
6	.45	.012	30	28s
7	.52	.014	28	27
8	.60	.016	27	26
9	.67	.018	26	25
10	.75	.020 ($\frac{1}{50}$)	25	24
11	.90	.024	23	22½
12	1.05	.028	22	21
13	1.20	.032	21	20
14	1.35	.036	20	19
15	1.50	.040 ($\frac{1}{25}$)	19s	18
16	1.68	.045	18s	17
17	1.87	.050	18f	16
18	2.06	.055	17s	15s
19	2.25	.060 ($\frac{1}{17}$)	17f	14½
20	2.62	.070	15s	13s
21	3.00	.080	14s	12
22	3.37	.090	13s	11
23	3.75	.100 ($\frac{1}{10}$)	12	10
24	4.70	.125 ($\frac{1}{8}$)	11	8s
25	9.40	.250 ($\frac{1}{4}$)	3s	2s
26	14.10	.375 ($\frac{3}{8}$)	00s	00f
½ in.	18.80	.500		
1 in.	37.60	1.000		

Weights of Pure Zinc Drawn Round Rods, per Lineal Foot.

3/8-inch Diameter	.33 Lbs.
1/2 " "	.58 "
5/8 " "	.90 "
3/4 " "	1.30 "
7/8 " "	1.78 "
1 " "	2.32 "

Approximate Weights, per Lineal Foot, of Brazed Zinc Tubing.

No. 22 B. & S. Gauge.—.02534 Inch.

	Lb. per Foot.
3/8-inch O. D.	.0840
1/2 " "	.1300
5/8 " "	.1950
3/4 " "	.2064
7/8 " "	.2382
1 " "	.2812
1 1/4 " "	.3900
1 1/2 " "	.4687

The ore from which zinc is obtained is called "Black Jack" among miners and metallurgists. The reduced ore cast into slabs is called "Spelter." Spelter when rolled into sheets and drawn into tubes is called zinc, by which name the metal is most generally known. The very rare metal gallium is extracted from Black Jack. It is found in such minute quantities, and is so difficult of extraction, as to render it the most costly of all the rarer metals, being quoted at over $3,000 per ounce.

Electrical Department.

ELECTRICITY.

Before dealing with this subject it is necessary that the terms and words which are used should convey a clear and comprehensive meaning to the reader. The terms used by the engineer in the electrical work which comes under his care and direction are the "Ampere," the "Volt," the "Ohm" and the "Watt."

The Volt.

The Volt is the practical unit of electro-motive force—such an electro-motive force as would cause a current of one ampere to flow against the resistance of one ohm.

This unit is the one, perhaps, most frequently used in common conversation and print. It is difficult to explain the meaning of this term in popular language, unless we describe it as somewhat similar to the pressure of steam or water in a pipe. As we increase the pressure of water in a pipe we know it will increase the quantity of the current if it is free to move; so if we increase electrical pressure in a conductor we will increase the quantity of electrical energy passing through this conductor.

If we increase the pressure of water in a pipe where it has no chance to flow, we know we will increase the liability to leakage or breaking through its confinement. This is also true of electrical pressure as measured by volts. In these comparisons we must always remember that bodies like water have weight and cause friction when in motion, while in electrical measurements we can measure effects only. We have no more ability to see or handle electricity than we can see or handle the human soul.

Electro-motive force is sometimes said to be the soul of matter. Perhaps we may yet find it the source of all animal and vegetable life as well as of all motion in the universe. Its effects in producing motion, heat, light, or in exciting magnetic or chemical changes gives us the only means to measure it.

Although the conception of the meaning of the term volt is more ideal than that of bodily pressure, caused by a weight or a water pressure, yet as a measuring unit it is precise and positive in its own province.

The Ohm.

The ohm is the unit of electrical resistance—such a resistance as would limit the flow of electricity under an electro-motive force of one volt to a current of one ampere. A meg ohm is 1,000,000 ohms.

A legal ohm is the resistance of a column of mercury one square millometer in area of cross section, and 106 centimeters in length, at a temperature of 0 degrees C. or 32 degrees F.

In popular language the ohm may be compared to the resistance water meets with as it flows through a pipe. When electricity is going through a conductor, part of its energy is expended in the effort. It is like taking toll

from a spirit. It has been found by experiment that a pure copper wire, one-thousandth of an inch in diameter, at normal temperature, takes its toll from its ghost-like passenger at the rate of about ten ohms for each foot of wire in length. This gives us a convenient, practical measure, by which to calculate the resistance that electricity meets with in passing through copper conductors of various sizes. This resistance varies largely when electricity passes through different conducting substances depending on the material as well as on area and temperature. The resistance to the passage of electricity through the fine carbon filament of the incandescent lamp, causes it to glow with its brilliant light. In this case, the electricity pays its toll in performing useful work. It causes such intense molecular action among the atoms of the carbon filament as to raise them to an intense heat. It gives us heat and light without combustion. Cold carbon has about twenty-five hundred times the resistance of copper of the same temperature and area, although when the carbon is heated to incandescence, this resistance is decreased to about one-half. A more graphic conception of the resistance in the carbon filaments of a group of twelve ordinary sixteen-candle power incandescent lamps can be obtained, when we are told that as much energy is expended in causing this molecular action as would be necessary to throw a pound weight each second over the hat of the statue of Penn when placed in its proposed position on the tower of the Philadelphia City Hall. This is equivalent to about one horse power.

The Ampere.

The ampere is the practical unit of electric current—such a current [or rate of flow, or transmission of electricity] as would pass, with an electro-motive force of one volt, through a circuit whose resistance is equal to one ohm; a current of such a strength as would deposit from solution .006084 grain of copper per second.

To carry out the analogy between the flow of water and electrical energy, bearing in mind that we want to know the rate of the flow as well as the pressure behind it to find this energy, so in electrical measurements we want the rate of flow expressed in amperes, and the pressure in volts, to find the electrical effect. This is what the practical business man wants to know.

The Watt.

The watt is the unit of electric power—the volt-ampere; the power developed when 44.25 foot-pounds of work are done per minute, or .7375 foot-pounds per second; $\frac{1}{746}$ horse power.

There are three equations which give the value of the watt: [1st], C E-watts; [2nd], $C^2 R$=watts; [3rd], $\frac{E^2}{R}$ = watts. Where C equals the current in amperes, E equals the electro-motive force in volt, and R equals the resistance in ohms.

A kilo-watt is one thousand watts.

Dynamos are bought and sold, measured by their capacity to deliver this marketable, although intangible, unweighable influence for practical every-day use. Builders of electrical generators issue their commercial

lists with the ability of their machines "to do work," marked by the mysterious symbol K. W., meaning kilo-watts or one thousand watts.

The watt is the electrical unit of ability to do work and is similar in use to the well-known mechanical unit horse-power. Seven hundred and forty-six watts are equivalent to one horse-power.

As the medical profession go farther back in history than the electrical, they have chosen the dead Latin language for many of their symbols and terms, while electricians in their measurements have wisely seized the modern as well as more elegant and precise metric system of the French. It is an open and most grateful tribute paid by the able men of all nations engaged in electrical affairs, to the nicety and brilliancy of the French intellect. The names of these units are given in honor of the well-known electricians, Volta, Ohm, Ampere, while the unit of work is in honor of the great steam engineer, Watt.

Ohm's Law.

The fundemental law which gives the mathematical phase of electrical engineering is called "Ohm's Law," and is extremely simple. It is "*The strength of current* [*amperes*] *in any circuit varies directly as the electro-motive force* [*volts*], *and inversely as the total resistance* [*ohms*] *of the circuit.*" Likewise, the current between any two points varies as the difference of potential between those points, and inversely as the resistance to be overcome.

This law is usually expressed in units, by means of symbols, where C is the current in amperes, E the electro-motive force in volts, and R the resistance in ohms. The law is stated, $C = \frac{E}{R}$

Candle Power.

The candle-power is the unit of light; and a standard candle is a candle of definite composition which, with a given consumption in a given time, will produce a light of a fixed and definite brightness. A candle which burns 120 grains of spermaceti wax per hour, or two grains per minute, will give an illumination equal to one standard candle.

In comparing the capacity of electrical machines in candle-power a great mistake is made, as the electrical generators or dynamos do not produce light, but produce electrical energy; and this energy in being transformed into light, is subject to the efficiency of the lamp which transforms the one energy into the other—that is, electrical energy into the energy of illumination.

According to Slinger and Broker, the measurement of candle-power from standard candles is difficult, as the following causes for incorrect results are apt to occur and necessitate great care in making observations:

1st. Definite forms of candle-power, which cause a varying consumption of material per second, and consequently a varying light for the standard candle.

2d. Variations in the consumption of the spermaceti of which the candle is composed, as spermaceti is not a definite chemical compound but consists of a mixture of various substances; therefore, even if the consumption is maintained constant, the light-giving power is not necessarily constant.

3d. Variations in the consumption and the character of the wick—such as the number and size of the threads of which it is formed, and the closeness of the strands—all of which circumstances influence the amount of light given off by the candle.

4th. The light emitted in certain directions varies in a marked degree with the shape of the wick. The mere bending of a wicks, therefore, may cause the amount of light to vary considerably.

5th. The light varies with the thickness of the wick. Thick wicks give less light than thin wicks.

6th. The light given by the standard candle varies with the temperature of the testing room. As the temperature rises the light given off by the standard candle increases.

7th. Currents of air, by producing variations in the amount of melting wax in the cup of the candle, vary the amount of light emitted.

These difficulties in obtaining a fixed amount of light from a standard candle, together with the difficulty of comparing a feeble light of a single candle-power with the light of a much more powerful source, such as the arc lamp, coupled with the additional difficulty arising from the difference in the colors of the light, have led to the use of other standards of light than those furnished by the standard candle.

Nominal Candle-Power is a term sometimes applied to the candle-power taken in a certain favorable direction. This term is generally used in arc lighting. In the ordinary arc lamp the greatest amount of light is emitted at a particular point, viz.: from the crater in the upper or positive carbon. The term "rated candle-power" is sometimes used for nominal candle-power.

Spherical Candle-Power is the average or mean value of candle-power taken at a number of points around the source of light.

Efficiency of Incandescent Lamps: As all incandescent lamps are rated in candle-power, it is well to know the amount of electrical energy that is used in the lamp to obtain the candle-power at which the lamp is rated. Lamps in commercial use today vary from three and one-half watts for each candle-power developed to as high as five and one-half watts. The following table compiled by Mr George Cutter gives the average of the amount of energy each lamp consumes per candle-power:

Amperes Per Lamp.

Volts	52	75	110	220	330	440	1000	2000
Watts per C. P.	3.6	3.6	4.2	4.2	4.2	4.2	3.6	3.6
10 C. P.	.69	.48	.38	.19	.127	.095	.036	.018
16 C. P.	1.10	.76	.61	.30	.20	.15	.0576	.0288
20 C. P.	1.38	.96	.76	.38	.253	.19	.072	.036
25 C. P.	1.73	1.2	.95	.475	.32	.24	.09	.045
32 C. P.	2.21	1.53	1.22	.61	.41	.305	.115	.0575
50 C. P.	3.46	2.4	1.9	.95	.63	.47	.18	.09
100 C. P.	6.92	4.8	3.8	1.90	1.26	.94	.36	.18
150 C. P.	10.38	7.2	5.7	2.85	1.89	1.41	.54	.27

Arc Lamps of a nominal 2,000-candle power require about 500 watts; and the arc light circuits which are in use today by the standard systems have a current of from eight to ten amperes.

Horse Power.

A horse-power is a mechanical unit, and is the work done in raising 550 pounds one foot high in one second, or 33,000 pounds one foot high per minute; 746 watts equal one horse-power.

Electrical horse-power and mechanical horse-power are equivalent; both have the same value, one being expressed in electrical units, the other in foot pounds.

Methods of Wiring.

Multiple Arc Wiring is the system used most extensively for incandescent lighting and power purposes, and it is frequently spoken of as wiring in parallel. Two wires are run side by side, one the negative and one the

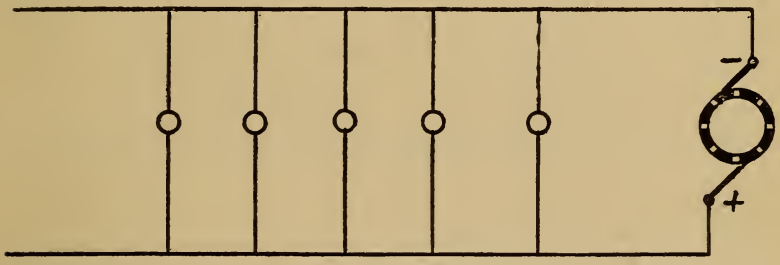

positive, and lamps or motors are connected across from one side to the other, as shown in diagram No. 1, a constant difference of pressure being maintained between the positive and negative wires, and the current varying as the number of devices for utilizing the same are increased or decreased.

The Series System is in the nature of a loop, the greatest difference of pressure being at the terminals of a loop. The current in this system of

wiring is constant, while the pressure varies as the devices are cut in or cut out of circuit. The principle of this system is shown in diagram No. 2.

The Series Multiple is a system where a number of multiple arc systems

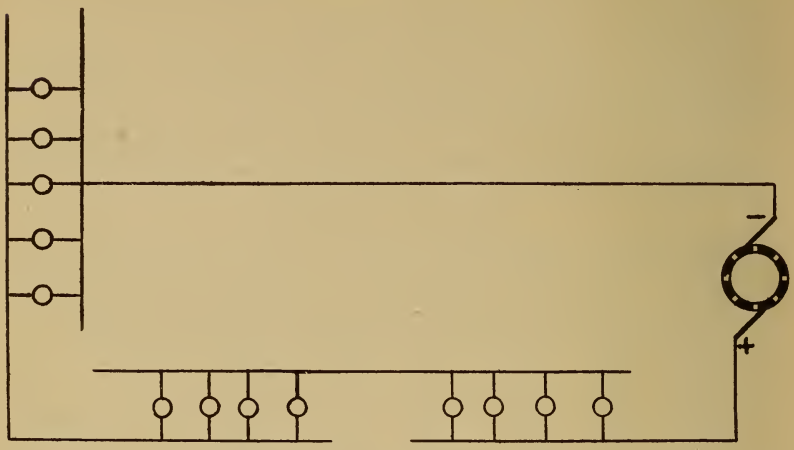

is placed in series, and will be indicated by its name, as shown in diagram No. 3.

The Multiple Series is a system where a number of small series or de-

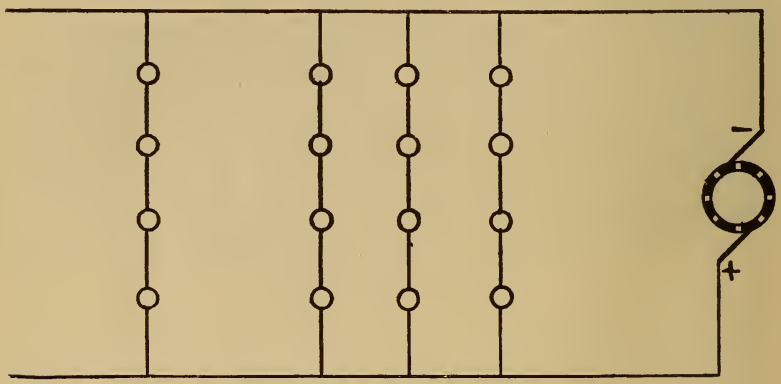

vices are connected up on a multiple arc system, as is shown in diagram No. 4.

The Edison Three-Wire System is in the nature of a multiple series. Incandescent lamps, not being made to stand a higher pressure than slightly above 110 volts, a system was devised so that 220 volts could be used by placing on a multiple arc system two lamps in series, each taking 110 volts, or the two taking 220 volts. The difficulty with this system was that two lamps had to be turned off or on at the same time. To avoid this, a third wire, which is called the neutral wire, was placed between the two lamps of the

series, and run back to the dynamo. In this way, if there were ten lamps on one side of the neutral wire and but eight on the other, the surplus current would flow back to the central station and permit the turning on or

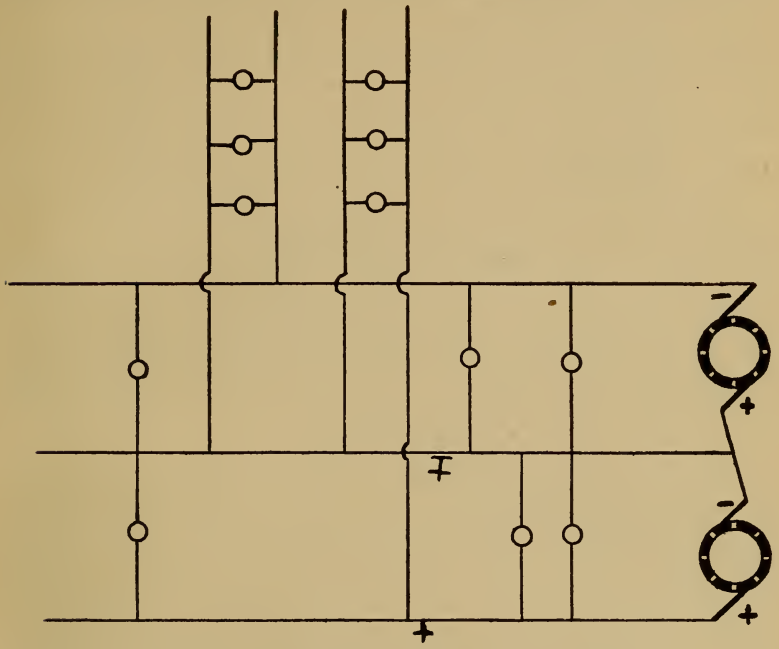

off of lights at will, arrangements being made at the central station to take care of the current on the neutral wire. This system is shown in diagram No. 5.

Conductors and Insulators or Non-Conductors.

All substances offer to the transmission of electrical energy more or less resistance. The bodies which offer the greatest resistance have been classed as insulators or non-conductors, and those which offer the least resistance are called conductors. The transition from a conductor to a non-conductor is not abrupt, for the poorest conductors are to some extent insulators, and even the best conductor offers some resistance to the passage of electricity. The following table exhibits the comparative position occupied by different substances:

CONDUCTORS.	NON-CONDUCTORS OR INSULATORS.
Metals,	Ice,
Charcoal,	Caoutchouc,
Graphite,	Dry air,
Acids,	Silk,
Water,	Glass,
Animals,	Wax,
Soluble Salts.	Sulphur and resins,
	Amber,
	Shellac.

Among the metals there is a great difference in the resistance offered to the transmission of electrical energy, and the following is a table of relative resistance, taking silver as a unit:

	RELATIVE RESISTANCE.
Silver, at 32° Fahr.	1.
Copper "	1.06
Zinc "	3.74
Platinum "	6.02
Iron "	6.46
German silver "	13.91
Mercury "	63.24

In the above table there is some question as to the correctness of the relative resistance of copper, as some experimenters have claimed that copper offers even a lower resistance than silver. Copper, however, in addition to its electrical qualities, commercially and mechanically offers advantages which has made it almost universally adopted for the transmission of electrical energy; and in practical work the engineer will find that it is the copper wire that he has to deal with. All electric light and power wiring tables are based upon copper wire.

Circular Mill.

A circular mill is the unit of area. A mill is one-thousandth part of an inch, and a circular mill is the area of a circle whose diameter is one mill.

Let us inquire why we use area of a circle, in giving the size of a wire, rather than the area of a square as is done in all other mechanical calculations. Why not use a square mill instead of a circular mill? As far as the minuteness in size is concerned, one would answer just as well as the other. A wire of but one-tenth of an inch in diameter has a sectional area of 10,000 circular mills. A circular mill is only about one-fourth smaller than a square mill. If our wires were square instead of round, electricians would have used the square mill instead of the circular mill. So we may answer that, as wires are round and as we frequently desire to compare their respective areas, we can do so most conveniently in circular mills. We can measure their diameters and compute these diameters in thousandths of an inch. As the areas of all circles vary as the squares of their diameters, then, by having the diameters, we can, by one simple act of multiplication, find the number of circular mills contained in each wire. As the electrical capacity of a wire to convey electricity varies as its sectional area we use this simple method to obtain the area, which is of great convenience in ordinary electrical calculations.

The Resistance of Copper Wire.

The resistance of any conductor varies directly as its length and inversely as its sectional area. That is, if we increase the length of a wire, just as we increase the length we increase the resistance; and if we double the area of a wire, we halve the resistance. Knowing this, all that is necessary to determine the resistance of any piece of copper wire is to decide upon some unit of length and some unit of area, and determine the resist-

ance; and from this we will know that the resistance of any length of wire will be as many times greater than it is greater than the unit in length, and as many times less as it is greater in area. The unit of length used in America is the foot, and the unit of area of the wire is the circular mill. It is found by experiment that the resistance of one foot of copper wire, one circular mill in area, at between fifty and sixty degrees Fahr., is about 10.61 ohms. If we had a wire of a thousand circular mills in area and one hundred feet long, and we wish to know the resistance, we would see that, due to the length, the resistance would be increased 100 times, while, due to the area, it would be decreased 1,000 times; and we would simply multiply 10.61 ohms by 100 and divide by 1,000, which would give us practically a result of 1.06 ohms.

Determination of Wires.

The three units and Ohm's law represent the fundamental basis upon which all electrical wiring is determined.

The resistance of a substance varies directly as its length, and inversely as its area of cross section. Thus, by increasing the length of a wire we increase the total resistance in proportion. But, on the other hand, as we increase the area we decrease the resistance. It requires pressure (volts) to overcome this resistance, and it is only pressure that is lost or used up. The analogy of forcing water along a pipe illustrates this point. We lose the pressure, but the quantity of water remains unchanged; and so it is with electrical energy. If in this conducting circuit we start out with one ampere, the ampere is not lost, but returns to the generating apparatus, and only the pressure (volts generated) is lost in doing the work of overcoming the resistance in the circuit. The work done in various portions of the circuit is proportional to the resistance of each portion. In electric wiring the end in view is to transmit as much of the electrical energy to the points at which it is to be used and to use as little as possible in the wires forming the path-way.

Wiring tables have been prepared so that the size of conductors may be determined for any percentage of loss. Thus, wires figured for two per cent loss, means that two per cent of the total pressure is to be used up in forcing the electrical energy along the wire, and ninety-eight per cent of the pressure is utilized in doing the work—in the incandescent lamp, or whatever appliance may be in the circuit.

It requires one volt to force an ampere through a conductor having a resistance of one ohm; or, in other words, we lose just one volt. If we had fifty-one volts at the start, we would have fifty volts multiplied by one ampere, or fifty watts of energy available for work, the work done in overcoming the resistance being one volt multiplied by one ampere, or one watt —practically, just about two per cent, of the total energy supplied.

Method of Preparing a Wiring Table.

The resistance of one foot of copper one circular mill in area is 10.61 ohms. The resistance of a conductor will change more or less with the change of temperature, but as far as practical wiring is concerned, resist-

ance is a constant factor. The length of wire in American tables is in feet, and the area in sizes of some standard wire gauge. The Brown & Sharpe [B. & S.], or American gauge, and the Birmingham wire gauge, are the ones in use. In all of the wiring tables given, the wires are in the B. & S. gauge unless otherwise stated.

In preparing a wiring table, a certain loss of energy is decided upon, and the first step is to ascertain the size of wire that will carry an ampere a distance of one foot, consuming an amount of energy that has been decided upon as the basis for the table. Then, knowing the size to carry one ampere a distance of one foot, the relative sizes for a number of amperes and a variety of distances are determined by multiplying this known size by the number of amperes and the number of feet. A variety of results are figured out and put in tabular form to simplify the calculation. The areas in these tables are expressed in the sizes of wire in use in the commercial world instead of using the number of circular mills.

To illustrate by example will make the explanation more explicit. The table being determined will be a two-wire multiple arc table, and will have for the basis 50 volts pressure, with a loss of one per cent. The units in the table will be amperes and feet. One per cent of 50 volts is one-half volt. To carry an ampere a distance of one foot would mean carrying it along two feet of wire, as there would be one foot for the out-going or positive and one for the return circuit or negative wire, thus making two feet of wire. The amount of energy consumed depends upon the resistance to be overcome; and as we have fixed the distance one foot, or the length of the wire as two feet, the dimensions to determine, in order to obtain the correct resistance, is the area. The total loss of pressure in the wire is about one-half volt, and the current transmitted one ampere. The resistance [ohms] is equal to the pressure divided by the current. In this case it is one-half volt, divided by one ampere, which gives us as the required resistance, one-half ohm. The resistance of one foot of copper wire one circular mill in area is 10.61 ohms, and two feet will be double that, or 21.22 ohms. As the resistance varies inversely as the area, and the resistance of a wire one circular mill is 21.22 ohms, the area of a wire having but one-half ohm resistance would have to be as many times greater in area as one-half is divided into 21.22, which is 42.44; and therefore 42.44 circular mills is the area required for a wire which will carry one ampere a distance of one foot with the expenditure of one-half volt; and this is constant for a 50-volt table for one per cent loss.

To carry 10 amperes 20 feet the number of amperes is multiplied by the number of feet, and this is multiplied by the constant [10x20x42.44,] which is 8488 circular mills, which corresponds approximately with No. 11 B. & S. wire [8234 circular mills equal No. 11 B. & S. wire.] This operation repeated, starting with one ampere up to 100 amperes, with distances of from 10 feet up to 200 feet, will give the results for a complete wire table. If the table was to be based upon one volt loss, the constant would be decreased to one-half, or 21.22. The reason for this is plain: the pressure to be lost or used in the wire has been doubled, and the resistance must be equally increased; and by doubling the resist-

ance of the same length of wire we halve the area. The constant for a table based upon amperes transmitted and volts lost is the same for all voltages, it being dependent upon the volts lost. That is, the constant for 100 volt table for one volt loss, and the constant for a table of 50 volts with one volt loss, is the same; but the constant for 100 volt table at two per cent loss, which is two volts, and the constant for a two per cent loss of fifty volts [which is but one volt], are not the same.

Wiring Tables.

In incandescent wiring the electro-motive force or the pressure in volts most commonly used are 50 volts, 110 volts and 220 volts. Sometimes the pressure used in stations will be a little above or a little below these standards, but in figuring for the sizes of wires to be used, the tables hereinafter given are all-sufficient.

Wiring Table for 50 Volt, 16 Candle Power Lamps.

LOSS OF 1 VOLT.

NO. OF LAMPS.	DISTANCE IN FEET TO CENTER OF DISTRIBUTION.							WIRE SIZES ARE INDICATED BELOW IN B. & S. GAUGE.								
	20′	25′	30′	35′	40′	45′	50′	60′	70′	80′	90′	100′	120′	140′	160′	180′	200′
1	16	16	16	16	16	16	16	16	16	16	16	16	16	15	14	14	13
2	16	16	16	16	16	16	16	16	15	15	14	13	13	12	12	11	10
3	16	16	16	16	16	15	15	14	13	13	12	12	11	10	10	9	9
4	16	16	16	15	15	14	13	13	12	11	11	10	10	9	8	8	7
5	16	16	15	14	13	13	13	12	11	11	10	10	9	8	8	7	7
6	16	15	14	13	13	12	12	11	11	10	10	9	8	8	7	7	6
7	15	14	13	13	12	12	11	11	10	9	9	8	8	7	6	6	5
8	15	14	13	12	12	11	11	10	9	9	8	8	7	6	6	5	5
9	14	13	12	12	11	11	10	9	9	8	8	7	6	6	5	5	4
10	14	13	12	11	11	10	10	9	8	8	7	7	6	5	5	4	4
12	13	12	11	11	10	10	9	8	8	7	7	6	5	5	4	4	3
14	12	11	10	10	9	9	8	7	7	6	6	5	4	4	3	3	2
16	12	11	10	9	9	8	8	7	6	6	5	5	4	3	3	2	2
18	11	10	9	8	8	7	7	6	6	5	5	4	3	3	2	2	1
20	11	10	9	8	8	7	7	6	5	5	4	4	3	2	2	1	1
25	10	9	8	7	7	6	6	5	4	4	3	3	2	1	1	0	0
30	9	8	7	7	6	5	5	4	3	3	2	2	1	0	0	0	00
35	8	7	7	6	5	5	4	4	3	2	2	1	1	0	00	00	000
40	8	7	6	5	5	4	4	3	2	2	1	1	0	00	000	000	000
45	7	6	5	5	4	4	3	2	2	1	1	0	00	00	000	000	0000
50	6	6	5	4	4	3	3	2	1	1	0	0	00	000	000	0000	0000
55	6	5	5	4	3	3	2	2	1	0	0	00	00	000	0000	0000	0000
60	5	5	4	4	3	3	2	1	0	0	00	00	000	000	0000	....	....
65	5	5	4	3	3	2	2	1	0	0	00	00	000	0000	0000	....	....
70	4	4	4	3	2	2	1	1	0	00	00	000	000	0000	0000	....	....
75	4	4	3	3	2	1	1	0	00	00	000	000	0000	0000	....	....	....
80	3	3	3	2	2	1	1	0	00	00	000	000	0000	0000	....	....	....
90	3	3	2	2	1	1	0	00	00	000	000	0000	0000		....	....	....
100	2	2	2	1	1	0	0	00	000	000	0000	0000	....	....	....	....	....

Wiring Table for 110 Volt, 16 Candle Power Lamps.

LOSS OF 1 1-10 VOLTS.

NO. OF LAMPS.	DISTANCE IN FEET TO CENTER OF DISTRIBUTION.								WIRE SIZES ARE INDICATED BELOW IN B. & S. GAUGE.								
	20′	25′	30′	35′	40′	45′	50′	60′	70′	80′	90′	100′	120′	140′	160′	180′	200′
1	19	19	19	19	19	19	19	19	19	19	19	19	19	18	17	17	16
2	19	19	19	19	19	19	19	19	18	18	17	16	16	15	15	14	13
3	19	19	19	19	19	18	18	17	16	16	15	15	14	13	13	12	12
4	19	19	19	18	18	17	16	16	15	14	14	13	13	12	11	11	10
5	19	19	18	17	16	16	16	15	14	14	13	13	12	11	11	10	10
6	19	18	17	16	16	15	15	14	14	13	13	12	11	11	10	10	9
7	18	17	16	16	15	15	14	14	13	12	12	11	11	10	9	9	8
8	18	17	16	15	15	14	14	13	12	12	11	11	10	9	9	8	8
9	17	16	15	15	14	14	13	12	12	11	11	10	9	9	8	8	7
10	17	16	15	14	14	13	13	12	11	11	10	10	9	8	8	7	7
12	16	15	14	14	13	13	12	11	11	10	10	9	8	8	7	7	6
14	15	14	13	13	12	12	11	10	10	9	9	8	7	7	6	6	5
16	15	14	13	12	12	11	11	10	9	9	8	8	7	6	6	5	5
18	14	13	12	11	11	10	10	9	9	8	8	7	6	6	5	5	4
20	14	13	12	11	11	10	10	9	8	8	7	7	6	5	5	4	4
25	13	12	11	10	10	9	9	8	7	7	6	6	5	4	4	3	3
30	12	11	10	10	9	8	8	7	6	6	5	5	4	3	3	3	2
35	11	10	10	9	8	8	7	7	6	5	5	4	4	3	2	2	1
40	11	10	9	8	8	7	7	6	5	5	4	4	3	2	1	1	1
45	10	9	8	8	7	7	6	5	5	4	4	3	2	2	1	1	0
50	9	9	8	7	7	6	6	5	4	4	3	3	2	1	1	0	0
55	9	8	8	7	6	6	5	5	4	3	3	2	2	1	0	0	0
60	8	8	7	7	6	6	5	4	3	3	2	2	1	1	0	.	....
65	8	8	7	6	6	5	5	4	3	3	2	2	1	0	0	....	....
70	7	7	7	6	5	5	4	4	3	2	2	1	1	0	0	....	..
75	7	7	6	6	5	4	4	3	2	2	1	1	0	0	....	....	....
80	6	6	6	5	5	4	4	3	2	2	1	1	0	0		....	....
90	6	6	5	5	4	4	3	2	2	1	1	0	0	....	....	....	. ..
100	5	5	5	4	4	3	3	2	1	1	0	0	....	....	....	....	....

In figuring for alternating currents, the pressure used for the primary circuits, or the lines used for transmitting the current before it reaches the converter, is either 1,000 or 2,000 volts. On the right-hand corner of the table is shown the amount of current which the different sized candle power lamps will take at the voltage upon which the table is based.

Wiring Table for Primary Circuits.

Sizes of Wire in B. & S. Gauge.	PER CENT LOSS AT 1,000 VOLTS.								THE FIGURES AT THE TOP OF EACH COLUMN INDICATE PRIMARY CURRENTS IN AMPERES. DISTANCES GIVEN BELOW IN FEET TO CENTER OF DISTRIBUTION.											
	2.	2.5	3.15	4.	5.	6.3	8.	10.	1.	1.5	2.	3.	4.	6.	8.	10.	12.	14.	16.	18.	20.
								0000	978,000	652,000	489,000	326,000	244,500	163,000	122,250	97,800	81,500	69,850	61,125	54,300	48,900
							0000	000	775,000	516,660	387,500	258,300	194,000	129,150	97,000	77,500	64,575	55,350	48,500	43,050	38,750
						0000	000	00	616,000	410,660	308,000	205,300	154,000	102,650	77,000	61,600	51,325	44,000	38,500	34,200	30,800
					0000	000	00	0	489,000	326,000	244,500	163,000	122,200	81,500	61,100	48,900	40,750	34,925	30,550	27,150	24,450
				0000	000	00	0	1.	389,000	259,330	194,500	129,600	97,200	64,800	48,600	38,900	32,400	27,780	24,300	21,600	19,450
			0000	000	00	0	1.	2.	309,000	206,000	154,500	103,000	77,200	51,500	38,600	30,900	25,750	22,075	19,300	17,150	15,450
		0000	000	00	0	1.	2.	3.	245,000	163,330	122,500	81,660	61,200	40,830	30,600	24,500	20,415	17,500	15,300	13,600	12,250
	0000	000	00	0	1.	2.	3.	4.	194,000	129,330	97,000	64,600	48,500	32,300	24,250	19,400	16,150	13,860	12,125	10,800	9,700
	000	00	0	1.	2.	3.	4.	5.	154,000	102,660	77,000	51,300	38,500	25,650	19,250	15,400	12,825	11,000	9,625	8,550	7,700
	00	0	1.	2.	3.	4.	5.	6.	122,000	81,330	61,000	40,660	30,400	20,330	15,200	12,200	10,165	8,725	7,600	6,800	6,100
	0	1.	2.	3.	4.	5.	6.	7.	97,060	64.660	48,500	32,300	24,200	16,170	12,100	9,700	8,085	6,925	6,050	5,400	4,850
	1.	2.	3.	4.	5.	6.	7.	8.	76,900	51,260	38,450	25,630	19,220	12,815	9,610	7,690	6,407	5,490	4,805	4,270	3.845
	2.	3.	4.	5.	6.	7.	8.	9.	61,000	40,660	30,500	20,300	15,200	10,150	7,600	6,100	5,075	4,350	3,800	3,385	3,050
	3.	4.	5.	6.	7.	8.	9.	10.	48,400	32,260	24,200	16,130	12,100	8,065	6,050	4.840	4.032	3,455	3.025	2,690	2,420
	4.	5.	6.	7.	8.	9.	10.	11.	38,400	25,600	19,200	12,800	9,600	6,400	4,800	3,840	3,200	2,740	2,400	2,135	1,920
	5.	6.	7.	8.	9.	10.	11.	12.	30,400	20,260	15,200	10,130	7,600	5,065	3,800	3,040	2 532	2,175	1,900	1,688	1,520
	6.	7.	8.	9.	10.	11.	12.	13.	24,100	16,060	12,100	8,030	6,020	4,015	3,010	2,410	2,007	1,720	1,505	1,340	1,210
	7.	8.	9.	10.	11.	12.	13.	14.	19,200	12,800	9,600	6,400	4,800	3,200	2,400	1,920	1,600	1,370	1,200	1,066	960
	8.	9.	10.	11.	12.	13.	14.	15.	15,200	10,130	7,600	5,070	3,800	2,535	1,900	1,520	1,270	1,085	950	845	760
	9.	10.	11.	12.	13.	14.	15.	16.	12,100	8,060	6,050	4,030	3,025	2,015	1,512	1,210	1,007	864	756	672	605
	10.	11.	12.	13.	14.	15.	16.	.....	9,600	6,400	4,800	3,200	2,400	1,600	1,200	960	800	686	600	533	480
	11.	12.	13.	14.	15.	16.	.....	.....	7,610	5,070	3,805	2,540	1,902	1,270	951	761	635	544	475	422	380
	12.	13.	14.	15.	16.	.....	.....	.....	6,040	4,020	3,020	2,010	1,510	1,005	755	604	502	431	377	336	302
	13.	14.	15.	16.	.....	....	.....	.....	4,800	3,200	2,400	1,600	1,200	800	600	480	400	343	300	266	240
	14.	15.	16.	.....	.....	.....	.. ...	.....	3.800	2,533	1,900	1,266	950	633	475	380	316	271	237	211	190
	15.	16.	.....	.....	....	.....	.....	.....	3,020	2,013	1,510	1,006	755	503	377	302	251	215	188	168	151
	16.	.....	.....	.....	.....	.....	.....		2,390	1,593	1,195	796	597	398	298	239	199	171	149	133	119

Wiring Table for Primary Circuits—*Continued.*

PER CENT LOSS AT 1,000 VOLTS.								THE FIGURES AT THE TOP OF EACH COLUMN INDICATE PRIMARY CURRENTS IN AMPERES. DISTANCES GIVEN BELOW IN FEET TO CENTER OF DISTRIBUTION.											
2.	2.5	3.15	4.	5.	6.3	8.	10.	25.	30.	35.	40.	45.	50.	55.	60.	65.	70.	75.	80.	90.	100.
Sizes of Wire in B. & S. Gauge.							0000	39,120	32,600	27,940	24,450	21,730	19,560	17,780	16,300	15,040	13,970	13,040	12,220	10,860	9,780
						0000	000	31,000	25,830	22,140	19,400	17,220	15,500	14,090	12,910	11,920	11,070	10,330	9,700	8,610	7,750
					0000	000	00	24,640	20,530	17,600	15,400	13,690	12,320	11,200	10,260	9,499	8,800	8,213	7,700	6,840	6,160
				0000	000	00	0	19,560	16,300	13,970	12,220	10,870	9,780	8,891	8,150	7,523	6,985	6,553	6,110	5,430	4,890
			0000	000	00	0	1.	15,560	12,960	11,110	9,720	8,645	7,780	7,073	6,480	5,985	5,555	5,188	4,860	4,320	3,890
		0000	000	00	0	1	2.	12,360	10,300	8,830	7,720	6,867	6,180	5,618	5,150	4,754	4,415	4,120	3,860	3,430	3,090
	0000	000	00	0	1.	2.	3.	9,800	8,166	7,000	6,120	5,445	4,900	4,455	4,080	3,769	3,500	3,266	3,060	2,720	2,450
0000	000	00	0	1.	2.	3.	4.	7,760	6,460	5,544	4,850	4,311	3,880	3,527	3,230	2,985	2,772	2,586	2,425	2,160	1,940
000	00	0	1.	2.	3.	4.	5.	6,160	5,130	4,400	3,850	3,422	3,080	2,800	2,570	2,369	2,200	2,050	1,935	1,710	1,540
00	0	1.	2.	3.	4.	5.	6.	4,880	4,066	3,490	3,040	2,711	2,440	2,218	2,030	1,877	1,745	1,626	1,520	1,360	1,220
0	1.	2.	3.	4.	5.	6.	7.	3,880	3,230	2,771	2,420	2,156	1,940	1.764	1,617	1,492	1,385	1,293	1,210	1,080	970
1.	2.	3.	4.	5.	6.	7.	8.	3,076	2,563	2,197	1,922	1,709	1,538	1,398	1,281	1,183	1,098	1,025	961	854	769
2.	3.	4.	5.	6.	7.	8.	9.	2,440	2,030	1,743	1,520	1,356	1,220	1,109	1.016	938	871	813	760	677	610
3.	4.	5.	6.	7.	8.	9.	10.	1,936	1,613	1,383	1,210	1,076	968	880	807	745	691	645	605	538	484
4.	5.	6.	7.	8.	9.	10.	11.	1,536	1,280	1,097	960	853	768	698	640	590	548	512	480	427	.....
5.	6.	7.	8.	9.	10.	11.	12.	1,216	1,013	870	760	675	608	553	506	468	435	405	380	.....	.....
6.	7.	8.	9.	10.	11.	12.	13.	964	803	689	602	535	482	438	401	370	344	.....	.....	.....	.....
7.	8.	9.	10.	11.	12.	13.	14.	768	640	549	480	426	384	349	320	.....	.....	.....	.....	.....	.....
8.	9.	10.	11.	12.	13.	14.	15.	608	507	434	380	338	304	276	.....	.....	.....	.....	.....	.....	.....
9.	10.	11.	12.	13.	14.	15.	16	484	403	346	302	269	.....	.....	.....	.....	.....	.....	.....	.....	.....
10.	11.	12.	13.	14.	15.	16	.....	384	320	274	240	.....	.....	.....	.....	.....	.....				
11.	12.	13.	14.	15.	16.	.....	.....	305	254	217	.....	.....	.....	.....	.....	.....	.....				
12.	13.	14.	15.	16.	.....	.....	.....	242	201	.....	.....	.....	.....	.....	.....	.....	.....				
13.	14.	15.	16.	.....	.....	.....	.....	192	.....	.....	.....	.....	.....	.....	.....	.....	.....				
14.	15.	16.	.....	.....	.....	.....	.....	152	.....	.....	.....	.....	.....	.....	.....	.....	.....				
15.	16.	.....	.....	.....	.....	.....	.....	.....	.....	.....	.....	.....	.....	.....	.....	.....	.....				
16.	.....	.....	.....	.....	.....	.....	.....	.....	.....	.....	.....	.....	.....	.....	.....	.....	.....				

PRIMARY CURRENT At 1,000 Volts for STANDARD LAMPS.	
10 c. p.	.035 amp.
16 "	.050 "
25 "	.075 "
50 "	.15 "
150 "	.45 "

Wiring Table for Primary Circuits.

PER CENT LOSS AT 2,000 VOLTS.								THE FIGURES AT THE TOP OF EACH COLUMN INDICATE PRIMARY CURRENTS IN AMPERES. DISTANCES GIVEN BELOW IN FEET TO CENTER OF DISTRIBUTION.											
2.	2.5	3.15	4.	5.	6.3	8.	10.	1.	1.5	2.	3.	4.	6.	8.	10.	12.	14.	16.	18.	20.
Sizes of within B. & S. Gauge.							0	978.000	652,000	489,000	326,000	244,500	163,000	122,250	97,800	81,500	69,850	61,125	54,300	48,900
						0	1.	775,000	516,660	387,500	258,300	194,000	129,150	97,000	77,500	64,575	55,350	48,500	43,050	38,750
					0	1.	2.	616,000	410,660	308,000	205,300	154,000	102,650	77,000	61,600	51,325	44,000	38,500	34,200	30,800
				0	1.	2.	3.	489,000	326,000	244,500	163,000	122,200	81,500	61,100	48,900	40,750	34.925	30,550	27,150	24,450
			0	1.	2.	3.	4.	389,000	259,330	194,500	126,600	97,200	64,800	48,600	38,900	32,400	27,780	24,300	21,600	19,450
		0	1.	2.	3.	4.	5.	309,000	206,000	154,500	103,000	77,200	51,500	38,600	30,900	25,750	22,075	19,300	17,150	15,450
	0	1.	2.	3.	4.	5.	6.	245,000	163,330	122,500	81,660	61,200	40,830	30,600	24,500	20,415	17,500	15,300	13,600	12,250
0	1.	2.	3.	4.	5.	6.	7.	194,000	129,330	97,000	64,600	48,500	32,300	24,250	19,400	16,150	13,860	12,125	10,800	9,700
1.	2.	3.	4.	5.	6.	7.	8.	154,000	102,660	77,000	51,300	38,500	25,650	19,250	15,400	12,825	11,000	9,625	8,550	7,700
2.	3.	4.	5.	6.	7.	8.	9.	122,000	81,330	61,000	40,660	30,400	20,330	15,200	12,200	10,165	8,725	7,600	6,800	6,100
3.	4.	5.	6.	7.	8.	9.	10.	97,000	64,660	48,500	32,300	24,200	16,170	12,100	9,700	8,085	6,925	6,050	5.400	4,850
4.	5.	6.	7.	8.	9.	10.	11.	76,900	51,260	38,450	25,630	19,220	12,815	9,610	7,690	6,407	5,490	4,805	4,270	3,845
5.	6.	7.	8.	9.	10.	11.	12.	61,000	40,660	30,500	20,300	15,200	10.150	7,600	6,100	5,075	4.350	3,800	3,385	3,050
6.	7.	8.	9.	10.	11.	12.	13.	48,400	32,260	24,200	16,130	12,100	8,065	6,050	4,840	4,032	3,455	3,025	2,690	2,420
7.	8.	9.	10.	11.	12.	13.	14.	38,400	25,600	19,200	12,800	9,600	6,400	4,800	3,840	3,200	2,740	2,400	2,135	1,920
8.	9.	10.	11.	12.	13.	14.	15.	30,400	20,260	15,200	10,130	7,600	5,065	3,800	3,040	2,532	2.175	1,900	1,688	1,520
9.	10.	11.	12.	13.	14.	15.	16.	24,100	16,060	12,100	8,030	6,020	4,015	3,010	2,410	2,007	1,720	1,505	1,340	1,210
10.	11.	12.	13.	14.	15.	16.	.....	19,200	12,800	9,600	6,400	4,800	3,200	2,400	1,920	1,600	1,370	1,200	1,066	960
11.	12.	13.	14.	15.	16.	.....	.....	15 200	10,130	7,600	5,070	3.800	2,535	1,900	1,520	1,270	1,085	950	845	760
12.	13.	14.	15.	16.	.....	.....	.....	12,100	8,060	6,050	4,030	3,025	2,015	1,512	1,210	1,007	864	756	672	605
13.	14.	15.	16.	.....	.....	.....	.....	9,600	6,400	4,800	3,200	2,400	1,600	1,200	960	800	686	600	533	480
14.	15.	16.	.....	.....	.....	.....	.....	7,610	5,070	3,805	2,540	1,902	1,270	951	761	635	544	475	422	380
15.	16.	.....	.....	.....	.....	.....	.....	6,040	4,020	3,020	2,010	1,510	1,005	755	604	502	431	377	336	302
16.	.....	.....	.....	.....	.....	.....	.....	4,800	3,200	2,400	1,600	1,200	800	600	480	400	343	300	266	240
.....	.....	.....	.....	.....	.....	.....	.....	3,800	2,533	1,900	1,266	950	633	475	380	316	271	237	211	190
.....	.....	.....	.....	.....	.....	.....	.....	3,020	2,013	1,510	1,006	755	503	377	302	251	215	188	168	151
.....	.....	.....	.....	.....	.....	.....	.....	2,390	1,593	1,195	796	597	398	298	239	199	171	149	133	119

Wiring Table for Primary Circuits.—*Continued.*

PER CENT LOSS 2,000 VOLTS.								THE FIGURES AT THE TOP OF EACH COLUMN INDICATE PRIMARY CURRENTS IN AMPERES. DISTANCES GIVEN BELOW IN FEET TO CENTER OF DISTRIBUTION.												
2.	2.5	3.15	4.	5.	6.3	8.	10.	25.	30.	35.	40.	45.	50.	55.	60.	65.	70.	75.	80.	90.	100.
Sizes of wire in B. & S. Gauge.							0	39,120	32,600	27,940	24,450	21,730	19,560	17,780	16,300	15,040	13,970	13,040	12,220	10,860	9,780
						0	1.	31,000	25,830	22,140	19,400	17,220	15,500	14,090	12.910	11,920	11,070	10,330	9,700	8,610	7,750
					0	1.	2.	24,640	20,530	17,600	15,400	13,690	12,320	11,200	10,260	9,499	8,800	8,213	7,700	6,840	6,160
				0	1.	2.	3.	19,560	16,300	13,970	12,220	10,870	9,780	8,891	8,150	7,523	6.985	6,553	6,110	5,430	4,890
			0	1.	2.	3.	4.	15,560	12,960	11,110	9,720	8,645	7,780	7,073	6,480	5,985	5,555	5,188	4,860	4,320	3,890
		0	1.	2.	3.	4.	5.	12,360	10,300	8,830	7,720	6,867	6,180	5.618	5,150	4,754	4,415	4,120	3,860	3,430	3,090
	0	1.	2.	3.	4.	5.	6.	9,800	8,166	7,000	6,120	5,445	4,900	4,455	4,080	3,769	3,500	3,266	3,060	2,720	2,450
0	1.	2.	3.	4.	5.	6.	7.	7,760	6,460	5,544	4,850	4,311	3,880	3,527	3,230	2,985	2,772	2,586	2,425	2,160	1,940
1.	2.	3.	4.	5.	6.	7.	8.	6,160	5,130	4,400	3,850	3,422	3,080	2,800	2,570	2,369	2,200	2,050	1,935	1,710	1,540
2.	3.	4.	5.	6.	7.	8.	9.	4,880	4,066	3,490	3,040	2,711	2,440	2,218	2,030	1,877	1,745	1,626	1,520	1,360	1,220
3.	4.	5.	6.	7.	8.	9.	10.	3,880	3,230	2,771	2,420	2,156	1,940	1.764	1,617	1,492	1,385	1,293	1,210	1,080	970
4.	5.	6.	7.	8.	9.	10.	11.	3,076	2,563	2,197	1,922	1,709	1,538	1,398	1,281	1,183	1,098	1,025	961	854	769
5	6.	7.	8.	9.	10.	11.	12.	2,440	2,030	1,743	1,520	1,356	1,220	1,109	1,016	928	871	813	760	677	610
6.	7.	8.	9.	10.	11.	12.	13.	1,936	1,613	1,383	1,210	1,076	968	880	807	745	691	645	605	538	484
7.	8.	9.	10.	11.	12.	13.	14.	1,536	1,280	1,097	960	853	768	698	640	590	548	512	480	427	.....
8.	9.	10.	11.	12.	13.	14.	15.	1,216	1,013	870	760	675	608	553	506	468	435	405	380	.. ...	.....
9.	10.	11.	12.	13.	14.	15.	16.	964	803	689	602	535	482	438	401	370	344	.....	.....	.....	.....
10.	11.	12.	13.	14.	15.	16.	.....	768	640	549	480	426	384	349	320	.....	.....	.....	.....	.....	.....
11.	12.	13.	14.	15.	16.	.....	.....	608	507	434	380	338	304	276	.....	.....	.....	.....	.....	.....	.....
12.	13.	14.	15.	16.	.....	.....	.....	484	403	346	302	269	.....	.....	.....	.....	.....	.....	.....	.....	.....
13.	14.	15.	16.	.....	.....	.....	.....	384	320	274	240	.....	.....	.....	.....	.....	.....	PRIMARY CURRENT At 2,000 Volts for STANDARD LAMPS.			
14.	15.	16.	.....	.....	.....	.....	.....	305	254	217	.....	.....	.....	.....	.....	.....	.....				
15.	16.	.....	.....	.....	.....	.....	.....	242	201	.....	.....	.....	.....	.....	.....	.....	.....				
16.	.....	.....	.....	.....	.....	.....	.....	192	.....	... ...	.....	.....	.....	.....	.....	.....	.....	10 c. p. ...	.0175 amps.		
....	.....	.....	.....	.....	.....	.....	.....	152	.....	.....	.....	.....	.....	.....	.....	.....	.....	16 "	.0250 "		
	.....	.....	.....	.....	.....	.....	.....											25 "	.0375 "		
....	.....	.....	.....	.....	.....	.....	.....	.....	.....	.....	.....	.....	.....	.....	.....	.....	.....	50 "	.0750 "		
....	.....	.....	.....	.....	.....	.....	.....	.....	.....	.....	.....	.....	.....	.....	.....	.....	.....	150 "	.2250 "		

Wiring for Motor Circuits.

The size of a motor, which is given in horse power, is the maximum power that may be safely developed at the pulley. To obtain this mechanical power from the electrical energy there is a loss, and consequently there is more than one horse power of electrical energy supplied to a motor for every mechanical horse power developed at the pully.

To determine the size of wire for a motor circuit, it is necessary, first, to know the number of amperes that will develop the horse power. The electrical energy is the product of the voltage and the amperes. Therefore, the number of amperes required to develop one horse power will depend upon the voltage. In determining the number of amperes to develop a horse power, allowance must be made for the loss of electrical energy. Motors, though of the same type, yet of different sizes, will vary in efficiency, and motors of different types transform electrical energy into mechanical energy with different degrees of economy. To give the number of amperes required to develop the rated horse power on different sized motors, and for motors at different voltages, the following table has been compiled, the efficiency of the various sized motors being taken at such a per cent that will approximate nearest to the actual conditions.

Amperes per Motor.

This table is arranged to show the amperes per motor at the efficiencies indicated for various horse powers up to 150, and various voltages up to 1,200. One column shows the watts per motor, and another shows the number of 16-candle power lamps that equal the energy the motor draws from the circuit.

A uniform loss or drop of electrical pressure in service lines should be established in every central station supplying current for power purposes.

The pressure supplied at the motor brushes should be 110 volts for a 110 volt motor, and for motors of other voltages the pressure should be the same as the voltage at which they are rated. This is a point sometimes overlooked; the pressure supplied at the motor brushes being several volts lower than the pressure for which they are rated.

Amperes per Motor.

Table originated by George Cutter. Recompiled and enlarged by Thos. G. Grier.

H.P.	PER CENT OF EFFICIENCY.	WATTS.	16 C. P. 60 WATTS LAMPS.	THE TOP ROW INDICATES VOLTS.									
				50	75	110	220	400	500	600	800	1,000	1,200
½	75	497	8.2	10.0	6.62	4.5	2.25	1.24	1.00	.83	.62	.497	.41
¾	75	746	12.4	14.9	9.94	6.78	3.38	1.86	1.48	1.24	.93	.746	.62
1	75	995	16.6	20.0	13.24	9.0	4.5	2.5	2.00	1.66	1.24	1.	.82
1½	80	1,492	24.7	29.8	19.8	13.56	6.78	3.73	2.98	2.48	1.86	1.492	1.24
2	80	1,865	31.1	37.3	24.9	16.9	8.5	4.7	3.8	3.1	2.33	1.9	1.6
3	80	2,797	46.6	55.9	37.2	25.4	12.7	6.99	5.59	4.66	3.49	2.797	2.33
4	80	3,730	62.	74.6	49.8	33.8	16.9	9.3	7.5	6.2	4.66	3.8	3.1
5	80	4,662	77.7	93.2	62.1	42.3	21.1	11.65	9.32	7.77	5.82	4.662	3.88
7½	90	6,217	103.	124.0	82.9	56.5	28.2	15.54	12.43	10.36	7.77	6.217	5.18
10	90	8,288	138.	165.0	110.	75.3	37.6	20.72	16.57	13.81	10.36	8.288	6.90
15	90	12,433	207.	248.0	165.	113.	56.5	31.08	24.86	20.72	15.54	12.43	10.36
20	90	16,578	276.	331.0	221.	150.	75.3	41.44	33.15	27.63	20.72	16.57	13.98
25	90	20,722	345.	414.0	276.	188.	94.1	51.8	41.6	34.5	25.9	20.7	17.2
30	90	24,866	414.	497.0	331.	226.	113.	62.	49.7	41.4	31.	24.8	20.7
40	90	33,155	552.	663.0	442.	301.	150.	82.8	66.3	55.2	41.4	33.1	27.6
50	90	41,444	690.	828.0	552.	376.	188.	103.	82.8	69.	51.8	41.4	34.5
60	90	49,733	828.	994.0	663.	452.	226.	124.	99.4	82.8	60.	49.7	41.4
70	90	58,022	967.	1160.0	773.	527.	263.	145.	116.	96.7	72.5	58.	48.3
80	90	66,311	1105.	1326.0	884.	602.	301.	165.	132.	110.	82.9	66.3	55.2
90	90	74,599	1243.	1491.0	994.	678.	339.	186.	149.	124.	93.	74.5	62.
100	90	82,888	1381.	1657.0	1105.	753.	376.	207.	165.	138.	103.	82.8	69.
120	90	99,457	1657.	1989.0	1326.	904.	452.	548.	198.	165.	124.	99.	82.8
150	90	24,312	2072.	2486.0	1657.	1131.	565.	310.	248.	207.	155.	124.	103.

Minimum Size Wire for Motor Services.

A copper conductor will not carry with safety more than a certain number of amperes. In the installation of a motor, the service wires should always be of sufficient size to carry the number of amperes that will be required to develop the maximum rated horse power of the motor.

It is not advisable in motor circuits to use wire smaller than No. 14 B. & S. gauge, as wire of smaller size is liable to be broken.

The table gives the minimum size wire that should be used for motor services.

Minimum Size Wire for Motor Services.

H. P.	SIZE WIRE B. & S. GAUGE.		
	110 Volts.	220 Volts.	500 Volts.
½	14	14	14
1	14	14	14
2	10	14	14
3	8	12	14
4	6	10	14
5	5	8	14
7½	3	6	12
10	2	5	10
15	00	3	8
20	000	2	6
25	0000	1	5
30	.....	00	4
40	.....	000	2
50	.....	0000	1

Wiring for Motor Services.

This table is designed for any loss that may be adopted. The first three columns are for the horse power of the motor; the fourth column, the ampere capacity required by the motor to develop its rated horse power. The amperes in this table are a close approximation to actual practice, and so long as the question of efficiency of the motor is a variable one, the most valuable electric tables must be based upon approximation derived from actual practice. In the other columns of the table is given the distance which the various amounts of power can be transmitted on different sized wires with a loss of one volt. The five lines at the top of the table give information in regard to the wires of different sizes. The safe carrying capacity in this table is that which was adopted by the National Electric Light Association at Montreal, September 10th, 1891. The method used in applying this table is to divide the total distance from the street connections to the motor by the number of volts which are to be allowed for loss in the service wire. This will give the distance for one volt loss. See in what columns opposite the horse power this distance or the nearest amount to it is, and this will indicate the size wire required.

Sectional Area in Circular Mills																
Diameter in "Inches"																
Pounds per 100 feet																
Safe Carrying Capacity in Amperes																
Gauge Number "B. & S."																
				2583	4107	6530	10382	16510	26251	33102	41743	52634	66373	83695	105592	133079	167805	211600
				.051	.064	.081	.102	.128	.162	.182	.204	.229	.258	.289	.325	.365	.410	.460
				.782	1.243	1.977	3.143	4.998	7.946	10.02	12.64	15.93	20.10	25.34	31.96	40.28	50.80	64.05
				5	10	15	20	25	35	45	50	60	70	95	100	120	145	175
				16	14	12	10	8	6	5	4	3	2	1	0	00	000	0000
H. P. AT 110 VOLTS.	H. P. AT 220 VOLTS.	H. P. AT 500 VOLTS.	AMPERE LOAD OF MOTOR.	DISTANCE IN FEET THAT THE DIFFERENT "HORSE-POWERS" CAN BE TRANSMITTED WITH ONE VOLT LOSS.														
.....	.....	½ H. P.	1.00	121	192	308	490	778	1232	1560	1920	2433	3122	3940	4928	6271	8907	9971
.....	.....	1	2.00	60	96	154	245	389	616	780	960	1216	1561	1970	2464	3135	4453	4985
.....	½ H. P.	.....	2.30	52	83	135	213	348	535	680	834	1057	1357	1713	2142	2726	3872	4335
.....	.....	2	4.00	30	48	77	122	194	308	390	480	608	780	985	1232	1567	2226	2492
½ H. P.	1	.....	4.50	27	43	68	108	173	273	346	426	540	700	875	1095	1395	1975	2215
.....	.....	3	6.00	.....	32	51	81	127	205	260	320	405	520	656	821	1045	1484	1661
.....	.....	4	7.50	.....	25	40	65	104	164	208	258	328	416	525	657	836	1187	1330
1	2	.....	9.00	.....	21	34	54	86	137	173	213	270	347	438	547	697	990	1108
.....	.....	5	9.30	.....	20	33	53	84	132	167	206	261	335	423	530	674	947	1072
.....	3	7½	12.50	.....	.....	24	40	61	100	125	153	194	250	315	394	501	712	798
.....	.....	10	16.50	.....	.....	.....	29	47	76	96	118	147	189	239	298	380	539	604
2	4	.....	18.00	.....	.....	.....	27	43	68	86	106	135	173	219	273	348	495	524
.....	5	.....	21.10	.....	.....	.....	.....	37	58	77	91	115	146	186	233	297	422	472
3	.....	15	25.00	.....	.....	.....	.....	30	50	62	76	97	125	157	197	250	356	399
.....	7½	.....	28.20	.....	.....	.....	.....	.....	43	55	68	86	110	140	174	222	315	353
4	.....	20	33.15	.....	.....	.....	.....	.....	37	47	58	76	94	119	148	189	271	300
.....	10	.....	37.60	.....	.....	.....	.....	.....	.....	41	51	64	83	104	131	164	236	265
5	.....	25	42.00	.....	.....	.....	.....	.....	.....	38	45	58	73	93	116	143	211	236
.....	.....	30	49.70	.....	.....	.....	.....	.....	.....	.....	39	49	64	79	99	126	179	200
7½	15	.....	56.50	.....	.....	.....	.....	.....	.....	.....	.....	43	55	70	87	111	157	176
.....	.....	40	66.30	.....	.....	.....	.....	.....	.....	.....	.....	.....	47	60	79	95	135	150
10	20	.....	75.30	.....	.....	.....	.....	.....	.....	.....	.....	.....	41	52	65	82	118	132
.....	.....	50	82.80	.....	.....	.....	.....	.....	.....	.....	.....	.....	.....	47	59	75	107	120
.....	25	.....	94.10	.....	.....	.....	.....	.....	.....	.....	.....	.....	.....	41	52	66	94	106
15	30	.....	113.00	.....	.....	.....	.....	.....	.....	.....	.....	.....	.....	.....	.....	55	78	83
20	40	.....	150.00	.....	.....	.....	.....	.....	.....	.....	.....	.....	.....	.....	.....	.....	59	66
25	50	.....	188.00	.....	.....	.....	.....	.....	.....	.....	.....	.....	.....	.....	.....	.....	.....	53
30	60	.....	226.00	.....	.....	.....	.....	.....	.....	.....	.....	.....	.....	.....	.....	.....	.....	.....

Compiled and Copyrighted by Thos. G. Grier.

To clearly explain the workings of this table, several examples will be given illustrating different conditions:

Example 1.—A 15-horse power motor, 220 volts, at 400 feet from the street connection, with eight volts loss allowed for loss in service wire?

Eight volts loss in 400 feet distance means a loss of one volt for every ⅛ of 400 feet, or one volt loss in 50 feet. Referring to the table, we find 15-horse power under 220 volts can be transmitted 43 feet on No. 3 wire, or 55 feet on No. 2 wire. No. 2 being the nearest size is the wire desired.

Example 2.—Given a 110 volt five-horse power motor, 380 feet, 10 volts loss? Dividing 380 feet by 10 gives 38 feet for one volt. Referring to the table we find 38 feet, opposite five-horse power 110 volt motor, under No. 5 wire.

Example 3.—A 30-horse power 500 volt motor, 600 feet from street connection, 10 volts loss allowed? Six hundred feet divided by 10 gives 60 feet for one volt. Sixty-four feet is the nearest to 60 feet, opposite 30-horse power motor, and indicates No. 2 wire.

Simplified Copper Wire Equations.

BY CHARLES WIRT.

The following formulæ are for commercial copper of 97 per cent conductivity at 75 degrees Fahrenheit. They are correct within a fraction of one per cent, and are shorter than the usual form of these equations.

M=Circular Mils.
C''=Circular Inches.
R=Resistance in Ohms.
W=Weight in Pounds.
L=Length in Feet.

$$R=\frac{11L}{M} \qquad L=\frac{MR}{11}$$

$$R=\frac{L^2}{30000W} \qquad L=\sqrt{WR3000}$$

$$W=\frac{L^2}{30000R} \qquad C''=\frac{W}{3.03L}$$

$$W=C''x3.03L \qquad M=\frac{11L}{R}$$

$$W=\frac{Mx3.03L}{1000000} \qquad M=\frac{1000000W}{3.03L}$$

Amount of Drop in Wires with a Given Current.

AMERICAN GAUGE, BROWN & SHARPE'S NO.	CIRCULAR MILS, (d2)	FALL OF POTENTIAL IN VOLTS, PER AMPERE PER 1,000 FT.	AMERICAN GAUGE, BROWN & SHARPE'S NO.	CIRCULAR MILS, (d2)	FALL OF POTENTIAL IN VOLTS, PER AMPERE PER 1,000 FT.
0000	211600.00	.0505318	9	13094.00	.8165943
000	167805.00	.0637158	10	10381.00	1.03
00	133079.40	.0803503	11	8234.00	1.298521
0	105592.50	.1012593	12	6529.90	1.637494
1	83694.20	.1277612	13	5178.40	2.064841
2	66373.00	.1610920	14	4106.80	2.668524
3	52634.00	.2031469	15	3256.70	3.208450
4	41742.00	.2561507	16	2582.90	4.139673
5	33102.00	.3230183	17	2048.20	5.220349
6	26250.50	.4073238	18	1624.30	6.582833
7	20816.00	.5136713	19	1252.40	8.537567
8	16509.00	.6476743	20	1021.50	10.46789

Comparative Table of Diameter and Weight of Copper Wire.

AMERICAN GAUGE.				BIRMINGHAM GAUGE.			
No. of Gauge	Diameter in Mils.	Area in CM=d2	Pounds per 1,000 ft.	No. of Gauge	Diameter in Mils.	Area in CM=d2	Pounds per 1,000 ft.
4-0	4600	211600	639.33	4-0	454	206116	623.925
3-0	4096	167805	507.01	3-0	425	180625	546.76
2-0	3648	133079	402.01	2-0	380	144400	437.107
				0	340	115600	349.928
0	3249	105592	319.04	1	300	90000	272.435
1	2893	83694	252.88	2	284	180656	244.15
2	2576	66373	200.54	3	259	67081	202.965
3	2294	52634	159.03	4	238	56644	171.465
				5	220	48400	146.51
4	2043	41742	126.12	6	203	41209	124.742
5	1819	33102	100.01	7	180	32400	98.076
6	1623	26244	79.32	8	165	27225	82.41
7	1443	20822	62.90	9	148	21904	66.305
8	1285	16512	49.88	10	134	17956	54.354
9	1144	13110	39.56	11	120	14400	43.59
10	1019	10381	31.37	12	109	11881	35.964
11	0907	8226	24.88	13	095	9025	27.319
12	0808	6528	19.73	14	083	6889	20.853
13	0722	5184	15.65	15	072	5184	15.692
14	0641	4110	12.41	16	065	4225	12.789
15	0571	3260	9.84	17	058	3364	10.18
16	0508	2581	7.81	18	049	2401	7.268
17	0452	2044	6.19	19	042	1764	5.340
18	0403	1624	4.91				
19	0359	1253	3.78	20	035	1225	3.708
20	032	1024	4.09	21	032	1024	3.099
21	0285	820	2.45	22	028	784	2.373
22	0253	626	1.94	23	025	625	1.892
23	0226	510	1.54	24	022	484	1.465
24	0201	404	1.22	25	020	400	1.211
25	0179	320	.97	26	018	324	.9807
26	0159	254	.77	27	016	256	.7749
27	0142	201	.61	28	014	196	.5933
28	0126	159	.48	29	013	169	.5116
29	0113	127	.38	30	012	144	.4359
30	010	100	.20	31	010	100	.3027
31	0089	79	.24	32	009	81	.2452
32	0079	63	.19	33	008	64	.1937
33	007	49	.15	34	007	49	.1483
34	006	36	.12				
35	0056	28	.10				
36	005	25	.08	35	005	25	.07568
37	0045	18	.06				
38	004	16	.05	36	004	16	.04843

Table of Dimensions and Resistances of Pure Copper Wire.

AMERICAN OR BROWN & SHARPE GAUGE.	DIAMETER. MILS.	AREA.		WEIGHT AND LENGTH. SP. GR. .89.			RESISTANCE @ 75° F.				LOG DZ.	LOG R.
		CIRCULAR MILS ($d2$) 1 MIL = .001 IN.	SQUARE MILS ($d2 \times .7854$)	LBS. PER 1,000 FT.	LBS. PER MILE.	FEET PER LB.	R OHMS PER 1,000 FT.	OHMS PER MILE.	FEET PER OHM.	OHMS PER LB.		
0000	460.000	211600.00	166190.	639.33	3375.7	1.56	.04906	.25903	20383.	.000076736	5.3255157	2.6907235
000	409.640	167805.00	131790.	507.01	2677.0	1.97	.06186	.32664	16165.	.00012039	5.2248000	2.7914392
00	364.800	133079.40	104520.	402.09	2123.0	2.49	.07801	.41187	12820.	.00019423	5.1241128	2.8921264
0	324.950	105592.50	82932.	319.04	1684.5	3.13	.09831	.51909	10409.	.00030772	5.0236310	2.9926082
1	289.300	83694.20	65733.	252.88	1335.2	3.95	.12404	.65490	8062.3	.00048994	4.9226953	1.0935439
2	257.630	66373.00	52130.	200.54	1058.8	4.99	.15640	.82582	6393.7	.00078045	4.8219914	1.1942478
3	229.420	52634.00	41339.	159.03	839.68	6.29	.19723	1.0414	5070.2	.0012406	4.7212664	1.2949728
4	204.310	41742.00	32784.	126.12	665.91	7.93	.24869	1.3131	4021.0	.0019721	4.6205733	1.3956659
5	181.940	33102.00	25998.	100.01	528.05	10.00	.31361	1.6558	3188.7	.0031361	4.5198542	1.4963850
6	162.020	26250.50	20617.	79.32	418.81	12.61	.39546	2.0881	2528.7	.0049868	4.4191300	1.5971092
7	144.280	20816.00	16349.	62.90	332.11	15.90	.49871	2.6331	2005.2	.0079294	4.3183973	1.6978419
8	128.490	16509.00	12966.	49.88	263.37	20.05	.62881	3.3201	1590.3	.012608	4.2177208	1.7985184
9	114.430	13594.00	10284.	39.56	208.88	25.28	.79281	4.1860	1261.3	.020042	4.1170723	1.8991669
10	101.890	10381.00	8153.2	31.37	165.63	31.38	1.	5.2800	1000.0	.031380	4.0162392	0.0000000
11	90.742	8234.00	6467.0	24.88	137.37	40.20	1.2607	6.6568	793.18	.050682	3.9156109	0.1006283
12	80.808	6529.90	5128.6	19.73	104.18	50.69	1.5898	8.3940	629.02	.080585	3.8149065	0.2013327
13	71.961	5178.40	4067.1	15.65	82.632	63.91	2.0047	10.585	498.83	.12841	3.7141956	0.3020436
14	64.084	4106.80	3146.9	12.41	65.525	80.59	2.5908	13.680	385.97	.20880	3.6027977	0.4134415
15	57.068	3256.7	2557.8	9.84	51.956	101.63	3.1150	16.477	321.02	.31658	3.5187778	0.4934614
16	50.820	2582.9	2028.6	7.81	41.237	128.14	4.0191	21.221	248.81	.51501	3.4121076	0.6041316
17	45.257	2048.2	1608.8	6.19	32.683	161.59	5.0683	26.761	197.30	.81900	3.3113724	0.7048668
18	40.303	1624.3	1275.7	4.91	25.925	203.76	6.3911	33.745	156.47	1.3023	3.2106662	0.8055730
19	35.390	1252.4	983.64	3.78	20.051	264.26	8.2889	43.765	120.64	2.1904	3.0977431	0.9184961
20	31.961	1021.5	802.28	3.09	16.315	324.00	10.163	53.658	98.401	3.2926	3.0092384	1.0070008
21	28.462	810.10	636.25	2.45	12.936	408.56	12.815	67.660	78.037	5.2355	2.9085386	1.1077006

Table of Dimensions and Resistances of Pure Copper Wire.—*Continued.*

AMERICAN OR BROWN & SHARPE GAUGE.	DIAMETER MILS.	AREA.		WEIGHT AND LENGTH, SP. GR. 89.			RESISTANCE @ 75° F.				LOG D1.	LOG R.
		CIRCULAR MILS (D^2) 1 MIL= .001 IN.	SQUARE MILS (D^2 x .7854	LBS. PER 1,000 FT.	LBS. PER MILE.	FEET PER LB.	R OHMS PER 1,000 FT.	OHMS PER MILE.	FEET PER OHM.	OHMS PER LB.		
22	25.347	642.70	504 78	1.94	10.243	515.15	16.152	85.283	61.911	8.3208	2.8080083	1.2082309
23	22.571	509 45	400.12	1.54	8.1312	649.66	20.377	107.59	49.087	13.238	2.7071016	1.3091376
24	20.100	404.01	317.31	1.22	6.4416	819.21	25.695	135.67	38.918	21.050	2.6063921	1.4098471
25	17.900	320.40	251 64	.97	5.1216	1032.96	32.400	171.07	30.864	33.466	2.5056925	1.5105467
26	15.940	254.01	199.50	.77	4.0656	1302.61	40.868	215.70	24.469	53.235	2.4048508	1.6113884
27	14.195	201.50	158.26	.61	3.2208	1642.55	51.519	272.02	19.410	84.644	2.3042751	1.7119641
28	12.641	159.79	125.50	.48	2.5344	2071.22	64.966	343.02	15.393	134.56	2 2035496	1.8126896
29	11.257	126.72	99.526	.38	2.0064	2611.82	81.921	432.54	12.207	213.96	2 1028452	1.9133940
30	11.025	100.5	78.933	.30	1.5840	3293.97	103.30	545.39	9.6812	340.25	2.0021661	2.0140731
31	8.928	79.71	62.604	.24	1.2672	4152.22	127.27	679.99	7.8573	528.45	1.9015128	2.1047264
32	7.950	63.20	49.637	.19	1.0032	5236.66	164.26	867.27	6.0880	860.33	1.8007171	2 2155221
33	7.080	50.13	39.372	.15	.7920	6602.71	207.08	1093.4	4.8290	1367.3	1.7000977	2.3161415
34	6.304	39.74	31.212	.12	.6336	8328.30	261.23	1379.3	3.8281	2175.5	1.5992279	2 4170113
35	5.614	31.52	24.756	.10	.5280	10501.35	329.35	1738.9	3 0368	3458.5	1.4985862	2.5176530
36	5.000	25.00	19.635	.08	.4224	13238.83	415.24	2192.5	2.4082	5497.4	1.8979400	2.6182992
37	4.453	19.83	15.567	.06	.3168	16691.06	523.76	2765.5	1.9093	8742.1	1.2971037	2.7191355
38	3.965	15.72	12.347	.05	.2640	20854.65	660.37	3486.7	1.5143	13772.	1.1964525	2.8197867
39	3.531	12.47	9.7939	.04	.2112	26302.23	832.48	4395.5	1.2012	21896.	1.0958665	2.9203727
40	3.144	9.89	7.7676	.03	.1584	33175.94	1049.7	5542.1	.9527	34823.	0.9951963	3.0210429

This table has been prepared by George B. Prescott, Jr., by whose permission it is published.

Units of Measurement.

As the science of electricity has adopted the more complete and scientific metric system in the greater part of its work, we give the metric system and its equivalents in the units now in common use, also the table of decimal equivalents of the fractions of an inch.

Decimal Equivalents and the Metric System.

TABLE OF DECIMAL EQUIVALENTS OF 8THS, 16THS, 32DS AND 64THS OF AN INCH.

For use in connection with the micrometer caliper.

8ths.		
$\frac{1}{8} = .125$	$\frac{9}{32} = .28125$	$\frac{19}{64} = .296875$
$\frac{1}{4} = .250$	$\frac{11}{32} = .34375$	$\frac{21}{64} = .328125$
$\frac{3}{8} = .375$	$\frac{13}{32} = .40625$	$\frac{23}{64} = .359375$
$\frac{1}{2} = .500$	$\frac{15}{32} = .46875$	$\frac{25}{64} = .390625$
$\frac{5}{8} = .625$	$\frac{17}{32} = .53125$	$\frac{27}{64} = .421875$
$\frac{3}{4} = .750$	$\frac{19}{32} = .59375$	$\frac{29}{64} = .453125$
$\frac{7}{8} = .875$	$\frac{21}{32} = .65625$	$\frac{31}{64} = .484375$
16ths.	$\frac{23}{32} = .71875$	$\frac{33}{64} = .515625$
	$\frac{25}{32} = .78125$	$\frac{35}{64} = .546875$
$\frac{1}{16} = .0625$	$\frac{27}{32} = .84375$	$\frac{37}{64} = .578125$
$\frac{3}{16} = .1875$	$\frac{29}{32} = .90625$	$\frac{39}{64} = .609375$
$\frac{5}{16} = .3125$	$\frac{31}{32} = .96875$	$\frac{41}{64} = .640625$
$\frac{7}{16} = .4375$		$\frac{43}{64} = .671875$
$\frac{9}{16} = .5625$	64ths.	$\frac{45}{64} = .703125$
$\frac{11}{16} = .6875$		$\frac{47}{64} = .734375$
$\frac{13}{16} = .8125$	$\frac{1}{64} = .015625$	$\frac{49}{64} = .765625$
$\frac{15}{16} = .9375$	$\frac{3}{64} = .046875$	$\frac{51}{64} = .796875$
32ds.	$\frac{5}{64} = .078125$	$\frac{53}{64} = .828125$
	$\frac{7}{64} = .109375$	$\frac{55}{64} = .859375$
$\frac{1}{32} = .03125$	$\frac{9}{64} = .140625$	$\frac{57}{64} = .890625$
$\frac{3}{32} = .09375$	$\frac{11}{64} = .171875$	$\frac{59}{64} = .921875$
$\frac{5}{32} = .15625$	$\frac{13}{64} = .203125$	$\frac{61}{64} = .953125$
$\frac{7}{32} = .21875$	$\frac{15}{64} = .234375$	$\frac{63}{64} = .984375$
	$\frac{17}{64} = .256625$	

The Metric System.—Weights.

Metric Denominations and Values.			Equivalents in Denominations in use.	
Names.		No. Grams.	Weight of what quantity of water at maximum density.	Avoirdupois Weight.
Millier or tonneau	=	1,000,000	= 1 cubic meter	= 2204.6 pounds.
Quintal	=	100,000	= 1 hectoliter	= 220.46 pounds.
Myriagram	=	10,000	= 10 liters	= 22.046 pounds.
Kilogram or Kile	=	1,000	= 1 liter	= 2.2046 pounds.
Hectogram	=	100	= 1 deciliter	= 3.5274 ounces.
Dekagram	=	10	= 10 c. centimet.	= 0.3527 ounce.
Gram	=	1	= 1 c. centimet.	= 15.432 grains.
Decigram	=	.1	= .1 c. centimet.	= 1.5432 grain.
Centigram	=	.01	= 10 c. millimet.	= 0.1543 grain.
Milligram	=	.001	= 1 c. millimet.	= 0.0154 grain.

Measures of Length.

Metric Denominations and Values.			Equivalents in Denominations in use.
Myriameter	=	10,000 meters	= 6.2137 miles.
Kilometer	=	1,000 meters	= 0.62137 m. or 3.280 ft. 10 in.
Hectometer	=	100 meters	= 328 feet and 1 inch.
Dekameter	=	10 meters	= 393 7 inches.
Meter	=	1 meter	= 39.37 inches.
Decimeter	=	.1 of a meter	= 3.937 inches.
Centimeter	=	.01 of a meter	= 0.3937 inch.
Millimeter	=	.001 of a meter	= 0.0394 inch.

Measures of Surface.

Metric Denominations and Values.			Equivalents in Denominations in use.
Hectare	=	10,000 square meters	= 2.471 acres.
Arc	=	100 square meters	= 119.6 square yards.
Centarc	=	1 square meter	= 1.550 square inches.

Measures of Capacity.

Metric Denominations and Values.			Equivalents in Denominations in use.		
Names.		No. Liters.	Cubic Measure.	Dry Measure.	Wine Measure.
Kiloliter	=	1,000	= 1 cubic meter	= 1.308 cubic yards	= 264.17 galls.
Hectoliter	=	100	= .1 cubic meter	= 2 bush. 3.35 pks.	= 26.417 galls.
Decaliter	=	10	= 10 c. decimeters	= 9.08 quarts.	= 2.6417 galls.
Liter	=	1	= 1 c. decimeter	= 0.908 quart.	= 1.0567 qrts.
Deciliter	=	.1	= .1 c. decimeter	= 6.1022 cubic in.	= 0.845 gill.
Centiliter	=	.01	= 10 c. centimeters	= 0.6102 cubic in.	= 0.388 fluid oz
Milliliter	=	.001	= 1 c. centimeter	= 0.061 cubic in.	= 0.27 fluid dr.

Dynamo Electric Machinery.

In the practical operation of dynamo electric machinery there are two expressions commonly used to denote different phases of the current, namely, "direct current" and "alternating current." Both of them at the present time have about an equal share in the transmission of electrical energy, the direct current being used for arc lighting and for both central stations and isolated work in incandescent lighting, and also for street railway and power purposes. The alternating current is used to a very slight extent in all of the above except in the field of central station lighting, where it occupies a most prominent position.

Direct Current: The meaning of the expression "direct current" is almost explained in the name itself. The current is always traveling in the same direction, the positive wire always being positive and the negative always being negative.

Alternating Current: In alternating current working the current is rapidly reversed, rising and falling in a succession of impulses or waves. Electricity is, in fact, oscillating backwards and forwards through the conductor or conducting line with enormous rapidity, under the influence of a rapidly reversing electromotive force. The adjectives "alternate," "oscillatory," "periodic," "undulatory" and "harmonic," have all been used to describe such currents. The term "wave currents" perhaps gives a better expression. The properties of alternate currents differ somewhat from those of direct or continuous currents. They are affected not only by the resistance of the circuit, but also by its inertia or self-induction, which diminishes the amplitude of the waves, retards their phase and smooths them down in general.

Induction.

Induction is one of the marked peculiarities of electrical action. In popular language it may be compared as somewhat similar to the radiation of heat. The leakage of electricity, on account of imperfect insulation or the act of leaving the conductor and jumping through the air in search of another conductor, differs from induction. When a current of electricity is passing through a conductor, in the ordinary manner, there is an influence supposed to be encircling the conductor in whirling rings, producing magnetic and electrical effects by induction.

The magnetic effect can be shown by passing an electrically insulated conductor, in a vertical direction, through a small hole in a sheet of paper and sprinkling iron filings on the paper round the wire. The instant a direct current of electricity is passed through the wire, the iron filings obey the unseen power and become magnetic, arranging themselves in regular circles around the wire.

When the wires are laid side by side and each of them is electrically insulated, in the ordinary way, and when one of these wires has an electrical current passed through it, the other one shows some of this influence by means of delicate instruments or by other practical effects.

When an electrical current is produced in a closed conductor, by passing it in a certain direction through a magnetic field, we have another one of the effects of induction. In fact, this is especially the fundamental principle of the dynamo.

When an electrical current is passed through an electrically insulated conductor, coiled around a mass of iron, magnetism is produced by induction. This is the active principle which is so largely utilized in magnetizing the iron encasing the armatures of our dynamo. Other illustrations might be given to show the skill used in practical electrical affairs, either in using this general principle or showing the ingenious methods taken to prevent its interference with the satisfactory working of electrical currents. A principle so active as induction has often puzzled our most skillful electricians in its successful management.

In static electricity the peculiarities of induction have been longer under the eye of electricians, and were perhaps more fully understood. In dynamic electricity, since such largely important industries are depending on the mastering of this manifestation of force in its various forms, the study has assumed immense commercial importance and utility. As experiment is the only royal road to scientific knowledge, we are happy to know that there is a little army of some of the brightest men in the world constantly at work experimenting in the entire electrical field. They are yearly giving up to us the valuable products of their labor. Tesla, of late, seems to be one of the most prolific experimenters in inductive electrical effects produced by alternating currents of enormous frequency. What he has discovered may only be a foretaste of what may yet be in store for the world.

When an electrical current flows through an electrically insulated conductor, the magnetic force with which that wire is made alive does not seem to be in the wire itself, but in the space surrounding it. By giving our imagination a little play, we may say, "the live wire has two souls." The electrical is contained in the conductor, entangled among its molecules; while the magnetic one, seeming even more spiritual, hovers around outside of the conductor. In all probability the relationship between the two is very close. Each of these manifestations of force is easily and quickly changed from one to the other by methods familiar to electricians.

Converters: The utility of converters, or transformers, now so extensively used in connection with the alternating current for incandescent lighting, depends on induction. The electric energy which is sent from the dynamo into the street mains does its work in the lamps, although the conductors have no direct connection with the lamps. In fact, these conductors are electrically insulated; They enter and leave the converter, depending on induction in the converter for the execution of their duty in making the carbons glow. This mysterious outside influence is utilized by grouping coils of wire

connected with the dynamos with another group, in close neighborhood, leading to the lamps. These respective groups of wire are made effective by the magnetic action of bundles of soft iron around which the wires are coiled. By this method electrical energy, of a very high pressure, is transferred on the street by comparatively small and hence cheap wires. And what is of immense importance, the pressure is reduced at the pleasure of the constructor so as to suit the capacity of the lamps for endurance, and at the same

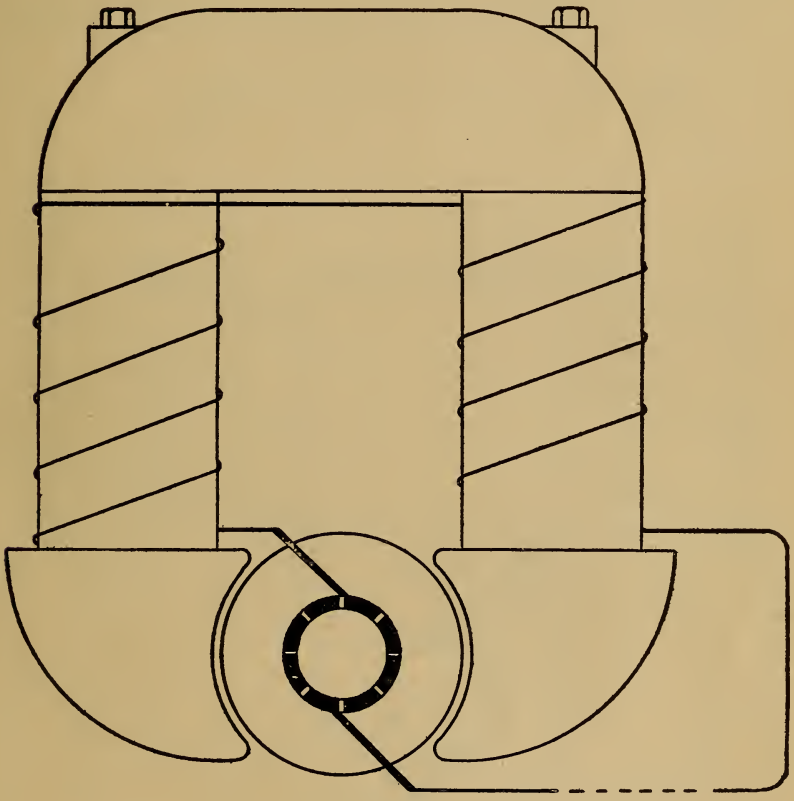

FIG. A.—SERIES WOUND

time making the current harmless to human life. We are told that this transformation is made at a loss of only about four per cent.

While only touching the surface of this interesting study, we acknowledge its subtleties, yet we can all comprehend and utilize some of its effects. The task for the mass of us engaged in electrical industries is not in the field of discovery, but it requires all our mental energy in the effort to grasp an understanding of some of the laws so fully described for us by our electri-

cians. We can see the dust raised ahead by our leaders, and all we can do is to keep within hailing distance of the procession and encourage our foot-sore comrades engaged with us in asking questions of nature.

The Dynamo.

The dynamo is a machine for generating electrical current. There are two classes in general use, the direct current and the alternating-current

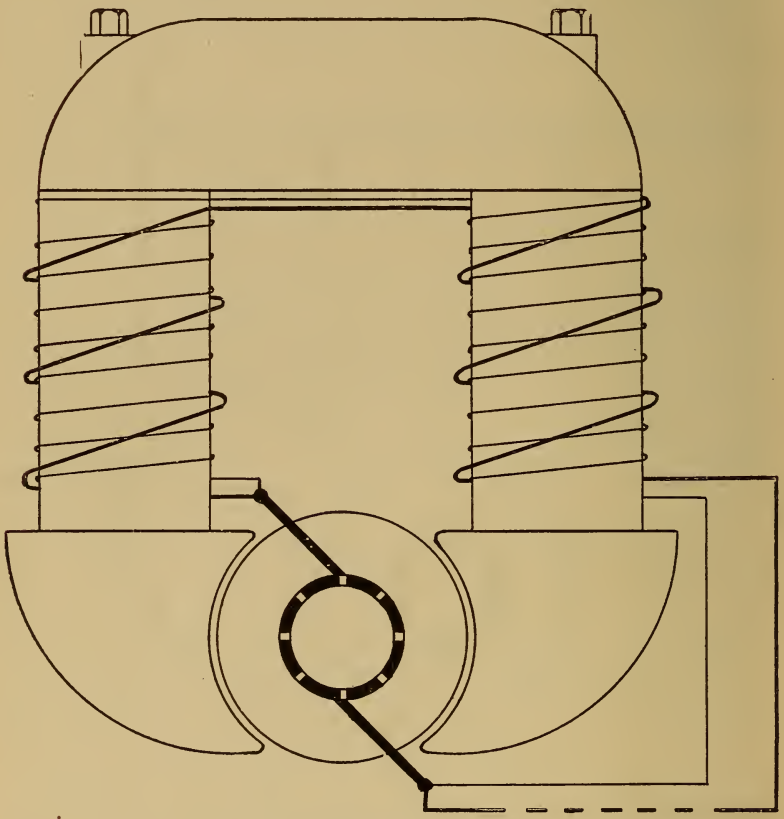

FIG. B.—COMPOUND WOUND.

dynamo. The direct-current dynamo may be sub-divided or classed as follows: the constant potential and the constant current. The constant potential dynamo is used for incandescent lighting and for power purposes. The constant current dynamo is usually series wound, that is, the field

magnets and the armature unite in series, a diagrammatic representation of which is given in figure A. The incandescent dynamo, or rather the constant-potential dynamo, is either compound wound or shunt wound, as shown in diagrams B and C. The first three diagrams show machines which are self-exciting; diagram D shows a dynamo which has its fields excited from some external source.

All dynamos are based upon the discovery made by Faraday in 1831,

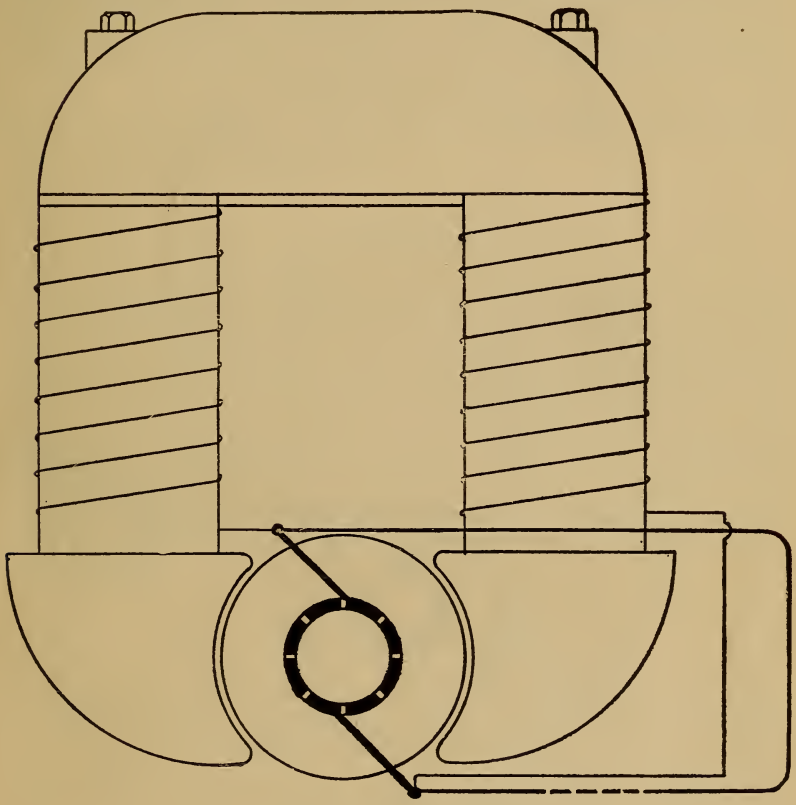

FIG. C.—SHUNT WOUND.

that electric currents are generated in conductors by moving them in a magnetic field. An electromotive force is produced in a conductor when it is moved in a field of magnetic force in such a way as to cut the lines of force in a direction at right-angles to the direction of the action, and at right-angles to the direction of the lines of force. This induced electromotive force is proportional to the intensity of the magnetic field, and to the length and velocity of the moving conductor. According to Ohm's well known

law, the flow of electricity in this conductor is directly proportional to this electromotive force and inversely proportional to the resistance of the conductor.

Alternaters.

Alternating dynamos will be classed in three sorts:

1st. Those with stationary field magnets and rotating armature. The Westinghouse Electric Co., the Ft. Wayne Jenney Co., the Thomson-Houston Co., and the National Electric Co. all manufacture alternating current dynamos of this type.

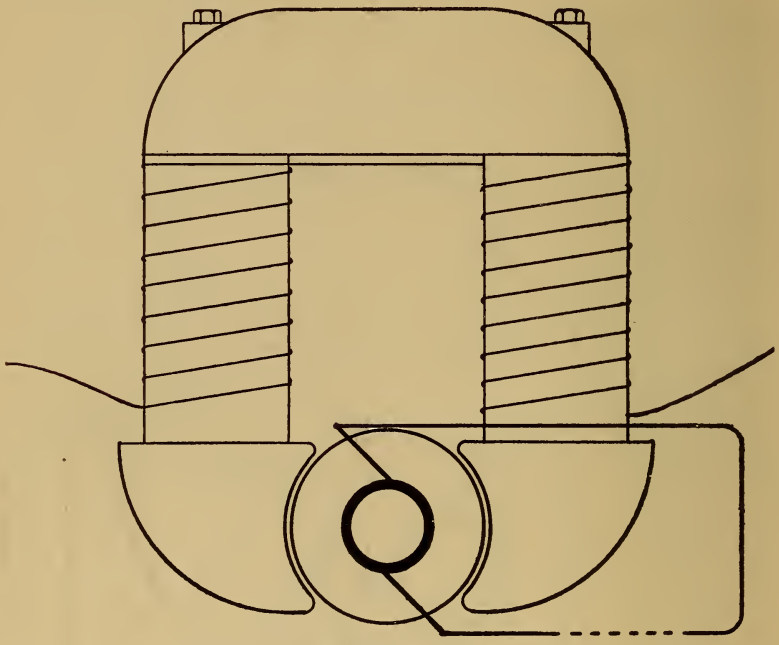

FIG. D.—SEPARATELY EXCITED.

2d. Those with rotating field magnets and stationary armature. This type of machine is manufactured by the Brush Electric Co.

3d. Those with both field magnet part and armature part stationary, the amount of magnetic induction from the latter through the former being caused to vary or alternate in direction by the revolution of appropriate pieces of iron called "inductors." The Royal Co. is experimenting with a machine of this make.

Alternaters are also either series or compound wound; but all alternating current dynamos in commercial use to day in the United States are excited by a direct current machine; that is, a small machine is connected to

the coils around the fields, and a direct current produces the magnetism necessary for the operation of the machine. All machines that are used for lighting generate a simple two phase current, which means that the current rapidly oscillates or changes direction.

There are alternating current machines manufactured for the purpose of driving motors which generate what is called a "multi-phase," and in these machines there are several currents whose wave length is the same, yet one lags behind the other.

In all alternaters the electromotive force rises and falls in a rapid periodic fashion, a wave of electricity being forced through the circuit first in one direction, then in the other, with great rapidity. The time taken for one complete alternation to and fro of the current is called one period. The frequency used in practice variates between 40 periods per second and 100, or sometimes 150 periods per second.

Armatures.

Armature Cores: The cores are always luminated, being constructed of either sheet-iron discs, (2d) iron ribbon, or (3d) iron wire. For drum armatures and elongated rings, discs stamped out from soft sheet iron are almost universal. The usual thickness is from 40 to 80 thousandths of an inch. To obtain the best results, these discs are lightly insulated one from the other, one side usually being covered with thin varnished paper, or the face of the disc being enameled. When iron wire is used, it is varnished or slightly oxidized on its surface and taped externally. The Brush arc light machines use the Gramme ring almost exclusively. The Edison incandescent dynamos offer an example as to the drum armature, more frequently known as the Slemens.

Balancing of Armatures.

It is very needful that armatures should be properly balanced, otherwise they will set up injurious vibrations in running. Most makers test their armatures for balance by laying the journals on two parallel metal rails, or knife edges, and notice whether the armature remains in any position without tending to roll. Armatures should be balanced with the pulleys on them.

Binding Wires.

After an armature has been wound, the conductors must be secured in place by a number of external bands. These must be very strong; as, should they become loose through the speed of the armature, the armature will be burnt or short-circuited.

Commutators.

The insulation between the segments of a commutator should be very good, and the commutator should always be kept scrupulously clean. Vaseline makes a very good lubricator for a commutator, a very little bit being applied to it, preferably by one's finger.

Brushes.

The kind of a brush most frequently used for receiving currents from the collector commutator, consists of a quantity of straight copper wires, or ribbons, soldered together at one end and held in a suitable clamp. The number of conducting points secured by this method is advantageous in reducing the sparking. Carbon brushes are coming into use of late to a great extent, the sparking from a carbon brush being much less than with the use of copper brushes. In setting brushes, they should be set so that they are diametrically opposite; and on all commutators center-punch marks will be found, so that the brushes can be set. The brushes should be held firmly and joined with a good metallic contact with their circuit. Brushes must be held to make contact at the proper angle to the surface of the commutator. Brushes must bear with proper pressure upon the commutator—if too light, they will jump and spark; if too heavy, they will cut the commutator into ruts. The object of a number of brushes on each side is that, in adjusting the brushes to obviate the sparking when the machine is running, the circuit will not be broken if one brush should be lifted from off the commutator. Insulated handles should be provided for all dynamos working above 100 volts, so that the brushes may be raised and adjusted without risk of shocks. It is always well to see that the insulation of the brush, or the brush and brush holders together, is very thorough, as bad insulation at this point will cause considerable trouble. Dirt on the commutators or armature is one of the greatest difficulties to be guarded against in the proper operation of the dynamo or motor.

Electric Motors.

"Dynamo electric machinery" is a term used to mean machinery for converting energy in the form of mechanical power into energy in the form of electric currents, or vice-versa. The electric motor is the inverse of the dynamo, its function being to convert the energy of electric currents into the energy of mechanical motion. An electric motor is an apparatus which does the mechanical work at the expense of electrical energy. Every one knows that a magnet will attract the opposite pole of another magnet and will pull it around. We also know that every mag-

net, placed in a magnetic field, tends to turn around and set itself along the lines of force. It is not, therefore, difficult to understand that very soon after the invention of the electro-magnet, which gave us for the first time a magnet whose power was under control, a number of ingenious persons conceived that it was possible to construct an electro-magnetic engine in which an electro-magnet placed in the magnetic field, should be pulled around, and that the rotation should be kept up continuously by cutting off or reversing the current at the proper moment. The first electro-motor which could be considered a practical success was designed by Jacobi for an electric boat in 1883. Professor Henry had designed one as early as 1823, exhibiting a motor which, though a mere toy, had all the elements of the motor of the present day.

Counter Electromotive Force.

Two points which are of vital importance are the propelling drag and the counter electromotive force. The first is that the real driving force, which propels the revolving armature is the drag which the magnetic field exerts upon the armature wires through which the current is flowing. In the generator the drag acts in the direction which opposes rotation, and is, in fact, the counter force or reaction against the driving force. In a motor the drag is the driving force and produces rotation. Let it be remembered that wherever a current flows through some portion of the circuit in which there is an electromotive force, the current will there either receive or give up energy, according to whether the electromotive force acts with the current or against it. The existence of this counter electromotive force is of the utmost importance in considering the action of the motor, because upon the existence and magnitude of this counter electromotive force depends the degree with which any given motor enables us to utilize electric energy that is supplied to it in the form of an electric current. In fact, this counter electromotive force is an absolute and necessary factor in the power of the motor. The counter electromotive force is proportional to the velocity, and acts as a check to the flow of the current through the armature. An armature running with a light load will generate a very high electromotive force; and although the actual resistance of the wire in the armature is very low, due to the backing up, as it were, of this counter electromotive force, only a small portion of current can flow through. As it requires current through the armature to do work, it will be easily understood that as the load is thrown on the motor, this counter electromotive force will gradually fall, allowing more current to flow through the armature.

Motors are made in shunt, compound wound and series wound. The compound wound and series wound motors are used on constant potential circuits, in which the electromotive force is constant and the quantity of current varies as the load. The series motors are used principally upon the arc light circuits, where the current is constant and the difference of pressure between the brushes of the motor varies with the load. Series motors require a governor, so that the speed can be constant. The governors are

usually made somewhat similar to the ball governors used on throttle engines. They work a lever which cuts in and out the sections of the fields, the principle of the governor being that the fields are strengthened or weakened accordingly, as the load increases or decreases. Shunt and compound wound motors which are in commercial use to-day are practically self-governing within the limits of their rated capacity.

General Remarks on Motors.

In locating a motor, always make allowance for the proper length of belt. A horizontal belt is most desirable. Never, when it can be avoided, place the motor directly above or below the shaft to be driven. This necessitates a tight belt and a useless and injurious strain upon the armature shaft. When circumstances will permit, place the motor so that the angle of belt will not be more than 45 degrees. It is better to transmit the power from the motor by an open belt. This is easily accomplished, as most motors can be made to run in either direction.

The Kind of Belt to be Used.

It is found in practice that a thin, soft leather belt, of the width of the pulley which is furnished with the motor, will transmit the power of the motor for which it is intended without being drawn tight enough to cause any sign of heating or slipping. If it is found to do either, it is a sure sign that the machine is doing more work than it ought or the belt is too tight. A solid and level foundation, preferably a wooden bench or platform, several feet above the level of the floor will give the best results. The starting box, or rheostat, should always be set up and connected at a place convenient for getting at it. If the bearings are self-lubricating, the old oil should be drawn out of the box at least once a day. In setting brushes, make allowance for the end chase of the shaft, and set them far enough away from the end of the commutator, so that there will be no possibility of contact between either brush and the commutator head.

Starting a Motor.

See that the bearings are properly lubricated, wipe the ends of brushes, and adjust them to the proper contact on the commutator. See that the lever on the rheostat, or starting box, is turned to the extreme end, so that the resistance will all be thrown in circuit. Close the main-line switch. This charges the fields. Then start the motor by moving the lever slowly but steadily, gradually cutting out the resistance in the armature circuit. Never allow the lever to remain on any intermediate pin or lift it off of the pin, but allow it to make contact with each pin as it is moved along.

The Size of Belts.

As electric motors are coming into use more and more, the question as to what size belt is required frequently arises. The layman relies upon the intelligence of his engineer or the salesman from whom he purchased his machinery.

The required size of a belt depends upon the speed at which it must travel, and the horse-power it must transmit at that speed. For those who are using machinery more or less in their business, yet do not pay any particular attention to this question, the following table is given, which will enable one to decide upon the size of belt to use.

SINGLE LEATHER.

BELT SPEED.	600	1200	1800	2400	3000	3600	4200	4800	5400	6000
WIDTH OF BELT	H.P.	H. P.	H. P.	H. P.	H. P.	H. P.	H. P.	H. P.	H. P.	H. P.
1 in.	1	2	3	4	5	6	7	8	9	10
2 in.	2	4	6	8	10	12	14	16	18	20
3 in.	3	6	9	12	15	18	21	24	27	30
4 in.	4	8	12	16	20	24	28	32	36	40
5 in.	5	10	15	20	25	30	35	40	45	50
6 in.	6	12	18	24	30	36	42	48	54	60
8 in.	8	16	24	32	40	48	56	64	72	80
9 in.	9	18	27	36	45	54	63	72	81	90
10 in.	10	20	30	40	50	60	70	80	90	100
12 in.	12	24	36	48	60	72	84	96	108	120
14 in.	14	28	42	56	70	84	98	112	126	140
16 in.	16	32	48	64	80	96	112	128	144	160

DOUBLE LEATHER.

BELT SPEED.	400	800	1200	1600	2000	2400	2800	3200	3600	4000	5000
WIDTH OF BELT	H.P.	H.P.	H. P.	H. P.	H. P.	H. P.	H. P.	H. P.	H. P.	H. P.	H. P.
4 in.	4	8	12	16	20	24	28	32	36	40	50
6 in.	6	12	18	24	30	36	42	48	54	60	75
8 in.	8	16	24	32	40	48	56	64	72	80	100
10 in.	10	20	30	40	50	60	70	80	90	100	125
12 in.	12	24	36	48	60	72	84	96	108	120	150
16 in.	16	32	48	64	80	96	112	128	144	160	200
20 in.	20	40	60	80	100	120	140	160	180	200	250
24 in.	24	48	72	96	120	144	168	192	216	240	300
30 in.	30	60	90	120	150	180	210	240	270	300	330
36 in.	36	72	108	144	180	216	252	288	334	370	450
40 in.	40	80	120	160	200	240	280	320	360	400	500

Stopping a Motor.

First open the cut-out in the main line or main line switch, then move the lever of the cutting box back to the point where all the resistance will be thrown into the armature circuit, so that the motor is all ready for starting. Sometimes a motor is connected up to machinery that will make the motor revolve backward for several turns after it is stopped. In such a case the brushes should be lifted off the commutator, to avoid their being caught in the segments when the armature revolves in the wrong direction.

Turning a Commutator.

When a commutator becomes rough and needs turning down, take the armature out and put it into a lathe. Choose a tool with a good clean, sharp edge and good clearance. Run it at a lively speed, as a low speed used for steel will not work so well. After turning it off enough, take a good sharp file and make it true. This should be done very carefully. Then look over the divisions carefully and see if there are any chips which project over the mica. If there are, remove them with the point of a knife, not cutting into the mica any more than necessary. Never use emery cloth to smooth the commutator, as it will charge into the copper and stay there, cutting away the brushes and causing much trouble. If anything of the kind is to be used, take fine sand-paper.

Detail Apparatus and Instruments.

In operating an electric light or power dynamo, it is essential that they have indicating and regulating devices, so that the engineer can tell what pressure or voltage his machine is generating and also the amount of current. The instrument used for determining the voltage or pressure of a machine is called the

Volt Meter.

Volt meters are made upon two principles. One of these is based upon the contraction and elongation of a wire, due to the variations in temperature caused by an electrical current traversing it. Volt meters built upon this principle are gradually coming into use on alternating current circuits, but are not as yet a commercial commodity. The volt meter which is based npon the principle of magnetism is the one commonly used, and is the one that the engineer is the most likely to come in contact with. The simplest form of this style of volt meter is a solenoid of a high resistance, which draws or attracts a soft iron core against gravity or a spring, which in turn indi-

cates the extent of its attraction by means of a pointer, this pointer showing on a graduated scale the number of volts acting upon the instrument. A volt meter is always placed in multiple, that is, between the positive and negative poles of the machine whose voltage it is to indicate. A volt indicator or volt meter that is used by some manufacturers simply indicates by its pointer one predetermined voltage. If the pointer moves to either side of this point, resistance is thrown into the fields or taken out of the fields, as circumstances may demand it, so as to regulate the pressure of the machine to such a point as will bring the pointer back to the center of the scale. More elaborate methods of employing the magnetic properties of a current to indicate pressure are used, and by referring to the *Electrical World* of the Spring of 1892, in a series of articles, a very extensive description of the manufacture and principles of several of the finest volt meters can be seen.

It is exceedingly important that an incandescent dynamo should be provided with a volt meter, as the life of an incandescent lamp is greatly lessened if the pressure at which these lamps are operated is increased above the rated voltage of the lamp; and without the use of a volt meter on the dynamo it is impossible to maintain the proper pressure, as no dynamos which are in use commercially can be depended upon to generate a constant pressure under varying loads.

Ampere Meter.

The ampere meter is an instrument devised to measure the quantity of current and is made upon the same plan as the volt meter, excepting that the volt meter is an instrument which takes a very small fraction or infinitesimal portion of the current, while in the ampere meter all the current passes through the instrument. Dynamos are designed to carry a certain number of amperes; and although it is possible, and also frequently the case in badly managed stations or plants, to operate a dynamo without the ampere meter, it is extremely inadvisable.

Safety Devices.

Although the ampere meter will indicate the quantity of current, and warn the engineer of an excessive amount of current, it does not act as a safe-guard; but devices have been arranged and invented to automatically break a circuit in case the quantity of current rises beyond the point that is considered safe. The simplest and most universal form of safety device or cutout, is the soft metal alloys, which fuse at a low temperature. These safety devices are interposed in a circuit, and are of such a size that an increase of current beyond the amount desired, will melt them and open the circuit. These fuse strips should be placed, and are generally placed, on a switch-board between the main wires connecting the dynamo and the

instruments on the board, and also are placed where the wires enter a building, and wherever the wires sub-divide in the distribution inside of the building they are also placed. They are put in the circuit running to motors to protect the motors, and in fact wherever a branch runs to feed any device with an electrical current, these safety devices, or, as they are more commonly called, cutouts, are interposed in the circuit.

A more reliable, and at the same time more expensive, cutout, based upon the principle of magnetism, is used where motors or machinery of a valuable nature require great precautions. These magnetic cutouts are solenoids, which attract a small armature that is held against this attraction by a tension spring. If the current reaches beyond a certain strength, the tension of the spring is overcome, and draws the armature in, thus closing the circuit through a very fine copper or fusible wire, and at the same time opening the main circuit. The small wire almost instantly melts, and the circuit is opened. This cutout is extremely useful on motors that are supplied from street railway circuits, as it acts as a lightning arrester as well as a cutout.

Lightning Arrester.

A great source of annoyance and danger to central stations are the injuries caused by lightning coming in the station from the outside lines. Instruments have been devised, known as lightning arresters, to obviate this difficulty and danger. These instruments are devised so as to cause a direct and free passage of the lightning to the ground, without, at the same time, grounding the line and allowing the dynamo current to follow the lightning. The simplest form of lightning arrester is made of five copper plates —two small copper plates being connected to the two poles or wires leading out from the dynamo, and these two small plates being connected with longer ones by safety fuses [these two longer plates having their edges notched], and between these two longer plates is another plate, with its edges notched, and the points lying close to the points of the two other long plates. This last plate is connected by a wire directly to the ground. When the lightning strikes the wire it comes along and jumps across these points to the ground; and if the dynamo current followed the arcing of the lightning, as it passed from these points to the ground, the safety fuse or soft metal strips would melt. The trouble with this form of lightning arrester is that as soon as it is struck by lightning it is necessary to put in new strips so that it would be ready for operation. It is always exceedingly difficult and dangerous to put these strips in, and consequently these lightning arresters were never very popular with the men running central stations. To obviate this, the Thomson-Houston company invented a magnetic lightning arrester for arc light circuits, which was for a long time the only successful lightning arrester in commercial use; but today numerous forms of lightning arresters have been devised; and the most notable

and scientific arrester is that devised by Wurtz, and which has been placed on the market by the Westinghouse Electric company. The principle upon which these lightning arresters have been devised, is that of having the lightning discharge to the ground occur in an air-tight compartment, and the expansion of the air, when the lightning discharge takes place, which is of considerable force, re-sets the instrument for the next discharge. Lightning discharges could occur in these arresters indefinitely until the arrester itself was worn out.

An arrester for pole lines, which is of considerable merit, is the swinging ball lightning arrester. This looks like an ordinary coffee-pot without a a spout. In the center of the bottom is a brass plate. This plate is connected with the line; and hanging right above it, in very close proximity to it, is a metal ball hung from the top of this pot-shaped metal cover. This cover is connected with the ground. If lightning strikes the wire, it will pass from the brass plate in the bottom to the metal ball, and direct to the ground; but the explosion caused by the spark jumping from the copper plate in the bottom to the metal ball causes the ball to swing to one side, and so opens the space between the metal ball and the copper plate, thus preventing the dynamo current from following across.

Station Switches.

Switches should be of the knife or jaw pattern, and well insulated from the ground, and always of a sufficient carrying capacity to prevent the current from heating them. The Lang switch is the standard switch for station work, and is used by many of the largest central stations in the country. For controlling small circuits, snap switches are used. The standard switches for small circuits, from five to ten amperes, is the Paiste switch; while for larger circuits, in which the switches are made double pole, the Edison and the Bryant switches are known as the standard. Like all other devices, as the electrical business has grown, other switches have come on the market, of more or less merit; but the switches above named will do to illustrate the point required in snap switches. It is necessary to make and break a circuit quickly, and without drawing an arc. A switch which accomplishes this purpose, and at the same time meets the views of the engineer as a good mechanical device, answers the purpose as a good snap switch.

Rheostats and Resistance Boxes.

According to Ohm's law, with a certain pressure the quantity of current would vary inversely as the resistance. In many cases it is desirable to regulate the quantity of current, and this is done by means of throwing resistance in or out of a circuit. The simple name for these contrivances would be "Resistance boxes;" but when the resistance box is used for reg-

ulating the pressure of a dynamo, which is done by putting it in circuit with the field coils, and thereby varying the resistance of the field coils, it is called a rheostat. Also, when resistance coils are used for a similar purpose on street cars, they are called rheostats, and sometimes regulating boxes; and when used on motors, either stationary or on street cars, they are termed starting boxes. Another name is applied to them very generally, and that is regulators.

Insulation.

A very important consideration in the installing and operating of a plant is the insulation of its various parts from the ground. Well glazed porcelain should be used; and wherever safety fuses or porcelain insulators are required, precaution should be taken against dampness. Rubber and glass are the best two insulators, for their insulating qualities. Mica and asbestos offer some advantages for different places. Weatherproof covered wire is of very little value as an insulated wire in localities where moisture abounds, if the wire is to be used for interior work, such as in buildings and factories.

It is always well for the engineer operating a station, or electric light power plant, to ascertain at stated intervals the insulation of his plant. This can be done by means of a Wheatstone Bridge. Some engineers use a magneto for testing out their stations or their lines, but this is not at all satisfactory, and is extremely crude. It will only detect very grievous faults, while with the Wheatstone Bridge incipient faults can be discovered and remedied, thereby saving much labor and sometimes considerable money. In almost every town of any size there is at least some one who owns a complete testing outfit; and it is money well invested, if it is not possible for the station to own a testing outfit itself, to employ these parties to test their station. In large cities like New York, Philadelphia and Chicago, there are men who make a specialty of this kind of work, and a number of the prominent architects employ specialists on their staff of superintendents to so inspect the wiring and the electrical insulations in the buildings they are constructing.

The Wheatstone Bridge is a very simple contrivance, when once thoroughly understood. It is simply the action of two currents on a small galvanometer, so acting against each other as to neutralize their effects and bring the needle of the galvanometer to rest. It is another case where Ohm's law comes into play. The Wheatstone Bridge consists of a resistance box, with a number of known resistances, and so arranged that by pulling out and putting in plugs, an indefinite number of resistances within a limited amount may be had. These known resistances are put into circuit on one side, and the unknown resistances, which is the resistance of the insulation, is put in on the other side. You then take out and put in plugs, thereby changing the resistance in the box, until the needle of the

galvanometer, to which the instrument is connected, comes to rest; and when that is so, you know that you have the same resistance in your box as you have in your insulation. The needle being still, indicates that the two resistances are equal and balance each other. The Electrical Supply company of Chicago, give in their catalogue a very complete description of the Wheatstone Bridge.

RULES ADOPTED BY THE NATIONAL ELECTRIC LIGHT ASSOCIATION.

Report of the N. E. L. A. Committee on Tabulating Wiring and Insurance Rules.

CLASS A.—CENTRAL STATIONS.

FOR LIGHT OR POWER.

These Rules also apply to Dynamo Rooms in Isolated Plants, connected with or detached from buildings used for other purposes. Also to all varieties of apparatus, of both high and low potential.

GENERATORS OR MOTORS—Must be:

1. Located in a dry place.
2. Insulated on floors or base-frames which must be kept filled to prevent absorption of moisture, and also kept clean and dry.
3. Not exposed to flying or combustible materials.
4. Each covered with a waterproof cover when not operating.

In no case must a generator be placed in a room where any hazardous process is carried on, such as the working-room of a cotton, jute, flax, woolen or flour mill.

CARE AND ATTENDANCE.—A competent man must be kept on duty in the room where generators are operating.

Oily waste must be kept in metal cans and removed daily.

CONDUCTORS —From generators, switchboards, rheostats or other instruments, and thence to outside lines, conductors must be:

1. In plain sight.
2. Wholly on non-combustible insulators, such as glass or porcelain.
3. Separated from contact with floors, partitions or walls through which they may pass, by non-combustible insulating tubes.
4. Kept rigidly so far apart that they cannot come in contact.
5. Covered with non-inflammable insulating material sufficient to prevent accidental contact.
6. Ample in carrying capacity to prevent heating. (See Capacity of Wires table.)
7. Connected by splices or joints equal in carrying capacity to the

1. Presented and adopted by the National Electric Light Association, Montreal, P. Q., Sept. 10, 1891.

conductors themselves, soldered if necessary to make them efficient and permanent.

8. When under floors or in distributing towers, placed in spaces ample for inspection and ventilation, and provided with special insulating covering.

SWITCHBOARDS—Must be:

1. So placed as to make it impossible to communicate fire to surrounding combustible material; accessible from all sides when the connections are on the back; or may be placed against a brick or stone wall when the connections are entirely on the face.

2. Kept free from moisture.

3. Made of non-combustible material, or of hard wood, filled to prevent absorption of moisture.

4. Equipped with bars and wires in accordance with rules 1, 2, 4, 5, 6 and 7 for placing interior conductors.

RESISTANCE BOXES AND EQUALIZERS—Must be:

1. Equipped with metal or non-combustible frames.

2. Treated as sources of heat.

3. Placed on the switch or a distance of a foot from combustible material, or separated therefrom by asbestos or cement.

LIGHTNING ARRESTERS—Must be:

1. Attached to each side of every overhead circuit connected with the station.

2. In plain sight.

3. On the switchboard or in an equally accessible place, away from combustible material.

4. Connected with at least two earths by separate wires of large size.

5. So constructed as not to maintain an arc after the discharge is passed.

TESTING.—All series and alternating circuits must be tested every two hours while in operation to discover any leakage to earth, abnormal in view of the potential and method of operation.

All multiple arc low potential systems (300 volts or less) must be provided with an indicating or detecting device, readily attachable, to afford easy means of testing where the station operates perpetually.

Data obtained from all tests must be preserved for examination by insurance inspectors.

CLASS B.—ARC (SERIES) SYSTEMS.

OVERHEAD CONDUCTORS.—All outside overhead conductors (including services) must be:

1. Covered with some insulating material, not easily abraded.

2. Firmly secured to properly insulated and substantially built supports, all the wires having an insulation equal to that of the conductors they confine.

3. So placed that moisture cannot form a cross-connection between them, not less than a foot apart and not in contact with any substance other than proper insulating supports.

4. At least seven feet above the highest point of flat roofs and at least

one foot above the ridge of pitched roofs, over which they pass, or to which they are attached.

5. Protected whenever necessary, in view of possible accidents to conductors or supports, from possibility of contact with other conducting wires or substances to which current may leak, by *dead insulated guard irons or wires*. Special precautions of this kind must be taken where sharp angles occur, or where any wires might possibly come in contact with electric light or power wires.

6. Provided with petticoat insulators of glass or porcelain. Porcelain knobs and rubber hooks are prohibited.

7. So spliced or joined as to be both mechanically and electrically secure without solder. They must then be soldered to insure preservation and covered with an insulation equal to that on the conductors.

The following formula for soldering fluid is approved:

Saturated Solution of Zinc.....5 parts.
Alcohol.....4 parts.
Glycerine.....1 part.

Conductors should not be run over, or attached to, buildings other than those in which light or power is being, or is to be, used, but on separate poles or structures, always easily inspected.

Service Blocks must be covered over their entire surface with at least two coats of waterproof paint and so maintained.

Telegraph, telephone and similar wires must not be placed on the same arm with electric or power wires and *should not* be placed on the same structure or pole.

INTERIOR CONDUCTORS.

All Interior Conductors—Must be:

1. Where they enter buildings from outside terminal insulators to and through the walls, covered with waterproof insulation, and must have drip loops outside, preferably slanting upward toward the inside and bushed with water-proof and non-combustible insulating tube.

2. Arranged to enter and leave the building through a double contact service switch, which will effectually close the main circuit and disconnect the interior wires when it is turned "off." The switch must be so constructed that it shall be automatic in its action, not stopping between points when started, and prevent an arc between the points under all circumstances: it must indicate on inspection whether the current be "on" or "off," and be mounted on a non-combustible base in a position where it can be kept free from moisture, and easy of access to police or firemen.

3. Always in plain sight, never covered, except in special cases, where an armored tube may be necessary.

4. Covered in all cases with a moisture-proof non-combustible material that will adhere to the wire, not fray by friction, and bear a temperature of 150° F. without softening.

5. In dry places, kept rigidly apart at least ten inches, except when covered (in addition to insulation) by a water-proof, non-conducting and non-inflammable tubing, which must be strong enough to protect the insu-

lation covering from injury. Conductors thus placed may be run not less than three inches apart, and be fastened with staples, under which are placed mechanically rigid insulating strips or saddles of greater width than the metal of the staple, by which possibility of injury to the tube may be prevented.

6. In damp places, attached to glass or porcelain insulators, and separated ten inches or more.

7. When passing through walls, floors, timbers or partitions, treated as in central stations under like conditions.

LAMPS AND OTHER DEVICES.

ARC LAMPS MUST BE IN EVERY CASE:

1. Carefully isolated from inflammable material.

2. Provided at all times with a glass globe surrounding the arc, securely fastened upon a closed base. No broken or cracked globes may be used.

3. Provided with a hand switch, also an automatic switch, that will shunt the current around the carbons should they fail to feed properly.

4. Provided with reliable stops to prevent carbons from falling out in case the clamps become loose.

5. Carefully insulated from the circuit, in all their exposed parts.

6. Where inflammable material is near or under the lamps, provided with a wire netting around the globe and a spark arrester above, to prevent escape of sparks, melted copper or carbon.

Incandescent lamps on series circuits, having a maximum potential of 350 volts or over, must be governed by the same rules as for arc lights, and each series lamp provided with a hand switch and automatic cut-out switch; when lights are in multiple series, such switches and cutouts must not control less than a single group of lights. Electro magnetic devices for switches are not approved.

Under no circumstances will incandescent lamps on series circuits be allowed to be attached to gas fixtures.

CLASS C.—INCANDESCENT (LOW PRESSURE) SYSTEMS.

300 VOLTS OR LESS.

OVERHEAD CONDUCTORS.

OUTSIDE OVERHEAD CONDUCTORS—Must be:

1. Erected in accordance with general rules for Arc (Series) Circuit Conductors.

2. Separated not less than six inches, where they enter buildings as service conductors, and be provided with a double pole fusible cut-out, as near as possible to the point of entrance to the building, and outside the walls when practicable.

UNDERGROUND CONDUCTORS.

UNDERGROUND CONDUCTORS—Must be:

1. Provided with suitable protecting devices at the ends of tube or

conduit services inside the walls of buildings, as a guard against moisture and injury.

2. Terminated at a properly placed double pole house cut-out.

3. Of specially insulated conductors after leaving the tube or conduit, and separated by at least ten inches, until the double pole cut-out is reached.

INSIDE WIRING.

Wire should be so placed that in the event of the failure or deterioration of their insulating covering, the conductors will still remain insulated.

At the entrance of every building there shall be a double pole switch placed in the service conductors, whereby the current may be entirely cut off.

CONDUCTORS MUST NOT BE:

1. Of sizes smaller than No. 16 B. & S , No. 18 B. W. G., No. 3 E. S. G.
2. Lead or paraffine covered.
3. Covered with soft rubber tube.
4. Laid in mouldings of any kind in damp places.
5. Laid in mouldings with open grooves against the wall or ceiling.
6. Laid in mouldings where less than half an inch of solid insulation is between parallel wires, and between wires and walls or ceilings.

Mouldings where admissible, must have at least two coatings of waterproof paint, or be impregnated with a moisture repellent.

CLEATWORK is not desirable, and cleats must *not* be used unless:

1. In a very dry place.
2. In a place perfectly open for inspection at any time.
3. They are of porcelain, or well-seasoned wood, filled, to prevent absorption of moisture.
4. They are so arranged that wires of opposite polarity, with a difference of potential of 150 volts or less, will be kept at least two and one-half inches apart, and that where a higher voltage is used, this distance be increased proportionately.
5. There is a backing provided, of wood at least half an inch thick, well-seasoned and filled, to prevent absorption of moisture.

METAL STAPLES must never be used to fasten conductors unless:

1. Provided with an insulating sleeve or saddle rigidly attached to the metal of the staple, and having such strength and surface as to prevent mechanical injury to the insulation of the conductor.
2. Under conditions in which cleatwork would be acceptable, or where driven into a moulding specially adapted for open work.

SPECIAL WIRING.

Wherever conductors cross gas, water, or other metallic pipes, or any other conductors or conducting material (except arc light wires), they should be separated therefrom by some continuous non-conductor at least one inch. In crossing arc light wires the low tension conductors must be placed at a distance of at least six inches. In wet places an air space must be left between conductors and pipes in crossing, and the former must be

run in such a way that they cannot come in contact with the pipe accidentally. Wires should be run *over* all pipes upon which condensed moisture is likely to gather, or which by leakage might cause trouble on a circuit.

In breweries, dye houses, paper and pulp mills, or other buildings specially liable to moisture, all conductors, except where used for pendants, must be:

1. Separated at least six inches.
2. Carefully put up.
3. Supported by porcelain or glass insulators.

Moisture proof and non-inflammable tubing may be accepted in lieu of such construction.

No switches or fusible cut-outs will be allowed in such places.

INTERIOR CONDUITS MUST NOT BE:

1. Combustible.
2. Of such material as will be injured or destroyed by plaster or cement, or of such material as will injure the insulation of the conductor.
3. So constructed or placed that difficulty will be experienced in removing or replacing the conductors.
4. Subject to mechanical injury by saws, chisels or nails.
5. Supplied with a twin conductor in a single tube where a current of more than 10 amperes is expected.
6. Depended upon for insulation. The conductors must be covered with moisture-proof material.

The object of a tube or conduit is to facilitate the insertion or extraction of the conductors, to protect them from mechanical injury, and, as far as possible from moisture.

Twin tube conductors must not be separated from each other by rubber or similar material, but by cotton or other readily carbonizable substance.

Conductors passing through walls or ceilings must be encased in a suitable tubing, which must extend at least one inch beyond the finished surface until the mortar or other similar material be entirely dry, when the projection may be reduced to half an inch.

DOUBLE POLE SAFETY CUT-OUTS MUST BE:

1. Placed where the overhead or underground conductors enter a building and join the inside wires.
2. Placed at every point where a change is made in the size of the wire (unless the cut-out in the larger wire will protect the smaller). This includes all the flexible conductors. All such junctions must be in plain sight.
3. Constructed with bases of non-combustible and moisture proof material.
4. So constructed and placed that an arc cannot be maintained between the terminals by the fusing of the metal.
5. So placed that on any combination fixture, no group of lamps requiring a current of six amperes or more shall be ultimately dependent upon one cut-out.

6. Wherever used for more than six amperes, or where the plug or equivalent device is not used, equipped with fusible strips or wires provided with contact surfaces or tips of harder metal, soldered or otherwise having perfect electrical connection with the fusible part of the strip.

SAFETY FUSES must be so proportioned to the conductors they are intended to protect, that they will melt before the maximum safe carrying capacity of the wire is exceeded.

All fuses, where possible, must be stamped or otherwise marked with the number of amperes equal to the safe carrying capacity of the wire they protect.

All cut-out blocks when installed must be similarly marked.

The safe carrying capacity of a wire changes under different circumstances, being about forty per cent less when the wire is closed in a tube or piece of moulding, than when bare and exposed to the air, when the heat is rapidly radiated. It must be clearly understood that the size of the fuse depends upon the size of the smallest conductor it protects, and not upon the amount of current to be used on the circuit. Below is a table showing the safe carrying capacity of conductors of different sizes in Birmingham, Brown & Sharpe, and Edison gauges, which must be followed in the placing of interior conductors:

BROWN & SHARPE.		BIRMINGHAM.		EDISON STANDARD.	
Gauge No.	Amperes.	Gauge No.	Amperes.	Gauge No.	Amperes.
0000	175	0000	175	200	175
000	145	000	150	180	160
00	120	00	130	140	135
0	100	0	100	110	110
1	95	1	95	90	95
2	70	2	85	80	85
3	60	3	75	65	75
4	50	4	65	55	65
5	45	5	60	50	60
6	35	6	50	40	50
7	30	7	45	30	40
8	25	8	35	25	35
10	20	10	30	20	30
12	15	12	20	12	20
14	10	14	15	8	15
16	5	16	10	5	10
		18	5	3	5

SWITCHES—Must:

1. Be mounted on moisture proof and incombustible bases, such as slate or porcelain.

2. Be double pole when the circuits which they control are connected to fixtures attached to gas pipes, and when six amperes or more are to pass through them.

3. Have a firm and secure contact, must make and break readily, and not stick when motion has once been imparted by the handle.

4. Have carrying capacity sufficient to prevent heating above the surrounding atmosphere.

5. Be placed in dry, accessible places, and grouped as far as pos-

sible, being mounted, when practicable, upon slate or equally indestructible back boards.

MOTORS.—In wiring for motive power, the same precautions must be taken as with the current of the same volume and potential for lighting. The motor and resistance box must be protected by a double pole cut-out, and controlled by a double pole switch.

ARC LIGHTS ON LOW POTENTIAL CIRCUITS—Must be:

1. Supplied by branch conductors not smaller than No. 12 B. & S. gauge.

2. Connected with main conductors only through double pole cut-outs.

3. Only furnished with such resistances of regulators as are enclosed in non-combustible material, such resistances being treated as sources of heat.

4. Supplied with globes protected as in the case of arc lights on high potential circuits.

FIXTURE WORK.

1. In all cases where conductors are concealed within, or attached to fixtures, the latter must be insulated from the gas pipe system of the building.

2. When wired outside, the conductors must be so secured as not to be cut or abraded by the pressure of the fastenings, or motion of the fixtures.

3. All conductors for fixture work must have a water-proof insulation that is durable and not easily abraded, and must not in any case be smaller than No. 16 B & S., No. 18 B. W. G., or No. 3 E. S. G.

4. All burrs or fins must be removed before the conductors are drawn into a fixture.

5. The tendency to condensation within the pipes must be guarded against by sealing the upper end of the fixture.

6. No combination fixture in which the conductors are concealed in a space less than one-fourth inch between the inside pipe and the outside casing will be approved.

7. Each fixture must be tested for possible "contacts" between conductors and fixtures, and for "short circuit," before the fixture is connected to its supply conductors.

8. The ceiling blocks of fixtures should be made of insulating material.

ELECTRIC GAS LIGHTING.

Where electric gas lighting is to be used on the same fixture with the electric light:

1. No part of the gas piping or fixture shall be in electrical connection with the gas lighting circuit.

2. The wires used with the fixture must have a non-inflammable insulation, or, where concealed between the pipes and shell of the fixture, the insulation must be such as is required for fixture wiring for the electric light.

3. The whole installation must test free from "grounds."

4. The two installations must test perfectly free of connection with each other.

PENDANTS AND SOCKETS.

No portion of the lamp socket exposed to contact with outside objects must be allowed to come into electrical contact with either of the conductors.

CORD PENDANTS—Must be:

1. Made of conductors, each of which is composed of several strands insulated from the other conductor by a mechanical separator of carbonizable material, and both surrounded in damp places with a moisture-proof and a non-inflammable layer.

2. Protected by insulating bushings where the cord enters the socket.

3. So suspended that the entire weight of the socket and lamp will be borne by knots, above the point where the cord comes through the ceiling block or rosette, in order that the strain may be taken from the joints and binding screws. All sockets used for wire or cord pendants should have openings at least equal to one-quarter inch gas pipe size.

4. Allowed to sustain nothing heavier than a four-light cluster, and in such a case special provision should be made by an extra heavy cord or wire, as a mechanical reinforcement.

5. Equipped with keyless sockets as far as practicable, controlled by wall switches. In no case may a lamp giving more than fifty (50) candle power be placed in a key socket on a flexible pendant.

CLASS D.—ALTERNATING SYSTEMS.

CONVERTERS OR TRANSFORMERS.

CONVERTERS—Must not:

1. Be placed inside of any building except the central station, unless as hereinafter provided.

2. Be placed in any but metallic or non-combustible cases.

3. Be attached to the outside walls of buildings, unless separated therefrom by substantial insulating supports.

4. Be placed in any other than a dry and convenient location (which can be secured from opening into the interior of the building, such as a vault) when an underground service is used.

5. Be placed without safety fuses at the junction between main and service conductors and safety fuses in the secondary circuits where they will not be affected by the heat of the converter.

PRIMARY CONDUCTORS.

In those cases where it may not be possible to exclude the transformers and primary wires entirely from the building, the following precautions must be strictly observed:

1. The transformer must be located at a point as near as possible to that at which the primary wires enter the building.

2. Between these points the conductors must be heavily insulated with a coating of moisture-proof material, and in addition, must be so covered

and protected that mechanical injury to them or contact with them shall be practically impossible.

3. The primary conductors, if within a building, must be furnished with a double-pole switch, and also with an automatic double-pole cut-out where the wires enter the building, or where they leave the main line on the pole or in the conduit. These switches should, if possible, be enclosed in secure and fireproof boxes outside the building.

4. The primary conductors, when inside a building, must be kept apart at least ten inches, and the same distance from all other conducting bodies.

SECONDARY CONDUCTORS.

The conductors from the secondary coil of the transformer to the lamps, or other translating devices must be installed according to the rules for "inside wiring" for "Low Potential Systems."

CLASS E.—ELECTRIC RAILWAYS.

POWER STATIONS.

All rules pertaining to arc light wires and stations shall apply (so far as practicable) to street railway power stations and their conductors.

RAILWAY SYSTEMS WITH GROUND RETURN.

Electric railway systems in which the motor cars are driven by a current from a single wire, with ground or floor return circuit, are prohibited, *except* as hereinafter provided:

1. When there is no liability of other conductors coming in contact with the trolley wire.

2. When the location of the generator is such that the ground circuit will not create a fire hazard to the property.

3. When an improved automatic circuit breaker or other device that will immediately cut off the current in case the trolley wires become grounded, is introduced in each circuit as it leaves the power station. This device must be mounted on a fire-proof base, and be in full view of the attendant.

TROLLEY WIRES.

TROLLEY WIRES—Must be:

1. No smaller than No. 0 B. & S., copper, or No. 4 B. & S., silicon bronze, and must readily stand the strain put upon them when in use.

2. Well insulated from their supports, and in case of the side or double-pole construction, the supports shall also be insulated from the poles immediately outside the trolley wire.

3. Capable of being disconnected at the power house, or of being divided into sections, so that in case of fire on the railway route, the current may be shut off from the particular section and not interfere with the work of the firemen in extinguishing the flames. This rule also applies to feeders.

4. Safely protected against contact with all other conductors.

CAR WIRING.

All wires in cars must be run out of reach of the passengers, and shall be insulated with a water-proof insulation.

LIGHTING AND RAILWAY POWER WIRES.

Lighting and power wires must not be permitted in the same circuit with trolley wires with a ground return, except in street railway cars, car houses, and power stations. The same dynamo may be used for both purposes, provided the connection from the dynamo for each circuit shall be a double-pole switch so arranged that only one of the circuits can be in use at the same time.

CLASS F.—BATTERIES.

When current for light and power is taken from primary or secondary batteries, the same general regulations must be observed as apply to such wires fed from dynamo generators, developing the same difference of potential.

CLASS G.—MISCELLANEOUS.

1. The wiring in any building must test free from "grounds" before the current is turned on. This test may be made with a magneto that will ring through a resistance of 20,000 ohms, where currents of less than 250 volts are used.

2. No ground wires for lightning arresters may be attached to gas pipes within the building.

3. All conductors connecting with telephone, district messenger, burglar alarm, watch clock, electric time and other similar instruments must, if in any portion of their length they are liable to become crossed with circuits carrying currents for light or power, be provided near the point of entrance to the building with some protective device which will operate to shunt the instruments in case of a dangerous rise of potential, and will open the circuit and arrest an abnormal current flow. Any conductor normally forming an innocuous circuit may become a source of fire hazard if crossed with another conductor through which it may become charged with a relatively high pressure. (Signed)

A. J. DeCamp, Chairman; M. D. Law, Stephen E. Barton, Wm. Brophy, T. Carpenter Smith.

Certain questions have come before the committee, which they considered of too great importance to be decided at this stage. Among these are the subjects of the grounding of the neutral wire in compensating or three-wire systems—the grounding, either permanently or through automatic cut-outs, of the secondary wires in transformer systems—the adoption of a uniform alloy for fusible cut-outs—and the adoption of better methods for testing circuits.

From the nature of the electrical business and the rapid advance it is making, there must, of necessity, questions continually arise which can only be decided by a later and larger experience, therefore the object of the association would be best served by the appointment of a permanent committee to whom should be referred all such questions, which they shall consider and report upon at the next succeeding meeting of the association.

Your committee, therefore, offer the following:

Resolved: That a committee of five be appointed by the president, to be a permanent committee on safe methods of construction and operation

—any vacancies that may occur on the committee from time to time to be filled by the president. (Signed) (Committee)

Wm. McDevitt, T. Carpenter Smith, Wm. Brophy, M. D. Law.

Note.—In compiling this chapter on electrical matters, the Westinghouse Electric Company, the Electrical Supply Company, of Chicago, the *Popular Electric Monthly*, of Chicago, and John A. Grier, of Philadelphia, have furnished copyrighted matter from their publications. T. G. G.

LIBRARY OF CONGRESS
0 030 005 118 2